NATIONAL AERONAUTICS AND SPACE ADMINISTRATION

NASA CR-
41816

(NASA-CR-141814) WIND TUNNEL TEST OF THE 0.019 SCALE SPACE SHUTTLE INTEGRATED VEHICLE (MODEL 14-OTS) IN THE CALSPAN 8-FOOT TRANSONIC WIND TUNNEL (IA36), VOLUME 2 (Chrysler Corp.) 927 p HC $23.75 CSCL 22B G3/18

N76-13183

Unclas
05371

1975
RECEIVED
NASA STI FACILITY
INPUT BRANCH

SPACE SHUTTLE

AERO THERMODYNAMIC DATA REPORT

JOHNSON SPACE CENTER
HOUSTON, TEXAS

DATA MANagement services
SPACE DIVISION CHRYSLER CORPORATION

November, 1975

DMS-DR-2064
NASA CR-141,816

WIND TUNNEL TEST OF THE 0.019 SCALE SPACE SHUTTLE INTEGRATED VEHICLE (MODEL 14-OTS) IN THE CALSPAN 8-FOOT TRANSONIC WIND TUNNEL (IA36)

VOLUME 2 OF 2

by

R. B. Hardin, R. R. Burrows, Rockwell International

Prepared under NASA Contract Number NAS9-13247

by

Data Management Services
Chrysler Corporation Space Division
New Orleans, La. 70189

for

Engineering Analysis Division

Johnson Space Center
National Aeronautics and Space Administration
Houston, Texas

WIND TUNNEL TEST SPECIFICS:

Test Number: CAL T14-053
NASA Series Number: IA36
Test Date: 15 through 22 June, 1973
Occupancy Hours: 80.5

FACILITY COORDINATOR:

Edmund F. Huestis
CALSPAN Corporation
P. O. Box 235
Buffalo, New York 14221

Phone: (716) 632-7500 x447

PROJECT ENGINEERS:

R. B. Hardin
Rockwell International
Space Division
12214 Lakewood Blvd.
Dept. 390, M. S. AC07
Downey, California 90241
Phone: (213) 922-1432

R. R. Burrows
Rockwell International
Space Division
12214 Lakewood Blvd.
Dept. 390, M. S. AC07
Downey, California 90241
Phone: (213) 922-1432

N. A. Struzynski
CALSPAN Corporation
P. O. Box 235
Buffalo, New York 14221
Phone: (716) 632-7500, x8174

DATA MANAGEMENT SERVICES:

Prepared by: Liaison--D. A. Sarver, V. W. Sparks
Operations--H. C. Zimmerle, Maurice Moser, Jr.

Reviewed by: G. G. McDonald

Approved: J. L. Glynn, Manager
Data Operations

Concurrence: N. D. Kemp, Manager
Data Management Services

Chrysler Corporation Space Division assumes no responsibility for the data presented other than display characteristics.

WIND TUNNEL TEST OF THE 0.019 SCALE
SPACE SHUTTLE INTEGRATED VEHICLE (MODEL 14-OTS)
IN THE CALSPAN 8-FOOT TRANSONIC WIND TUNNEL
(IA36)

R. B. Hardin, R. R. Burrows, Rockwell International

ABSTRACT

This report contains information concerning a wind tunnel test of the 0.019 scale Space Shuttle Integrated Vehicle in the CALSPAN 8-foot Transonic Wind Tunnel. The test started 15 June 1973 and ended 22 June 1973 for a total of 80.5 charge hours. The test identification number is IA36.

The purpose of this test was to determine the effect of cold jet gas plumes generated from MPS and SRM nozzles on 1) six-component force and moment data, 2) wing static pressures, 3) wing hinge moment, 4) elevon hinge moment, 5) rudder hinge moment, and 6) orbiter MPS nozzle pressure loads. The effects of rudder deflection, nozzle gimbal angle, and plume size were also obtained.

TABLE OF CONTENTS

Page

ABSTRACT iii

INDEX OF MODEL FIGURES 2

INDEX OF DATA FIGURES 4

NOMENCLATURE 8

CONFIGURATION DESCRIPTION 23

TEST FACILITY DESCRIPTION 28

TESTING AND PROCEDURE 29

REMARKS 31

DATA REDUCTION 32

TABLES 45

- I. TEST CONDITIONS 45
- II. DATASET COLLATION SUMMARY 46
- III. MODEL COMPONENT DESCRIPTIONS 60
- IV. TAP LOCATIONS - ORBITER NOZZLES 75
- V. DIMENSIONAL DESCRIPTION - ORBITER NOZZLES 76
- VI. DIMENSIONAL DESCRIPTION - SRM NOZZLES, N_{17} 77

FIGURES

- MODEL 78
- DATA - VOLUME 1 105

APPENDIX - TABULATED SOURCE DATA - VOLUME 2 105

PRECEDING PAGE BLANK NOT FILMED

INDEX OF MODEL FIGURES

Figure		Page
1.	Axis systems.	78
2.	Sign conventions.	
	a. Gimbal planes and sign conventions.	79
	b. Nozzle gimbal angle.	80
	c. Sign convention for angle of sideslip, angle of attack, and incidence angle.	81
	d. Sign convention for rudder and elevon deflections.	82
	e. Wing hinge moment data reduction dimensions.	83
	f. Moment transfer diagram.	84
3.	Pressure tap locations.	
	a. Wing pressure tap locations for RH wing panel.	85
	b. Orbiter base and cavity pressure tap locations.	86
	c. OMS pod base static pressure tap locations.	87
	d. EOHT pressure tap locations.	88
	e. SRM pressure tap locations.	89
4.	Ascent vehicle configuration.	90
	a. 2A Orbiter, basic dimensions.	91
	b. 2A Orbiter, fuselage with body flap.	92
	c. 2A Orbiter, wing.	93
	d. 2A Orbiter, vertical tail.	94
	e. 2A Orbiter, body flap, F4.	95

INDEX OF MODEL FIGURES (Concluded)

Figure Page

f. 2A Orbiter, OMS Pod. 96

g. 2A Orbiter, Nozzle. 97

5. Solid Rocket Motor Configurations, S_{10}, S_{11}, and S_6 with N_{18}. 99

6. External tank Configuration, T_{10}. 100

7. Model Photographs

a. Front view of Integrated Vehicle. 101

b. Aft view of Integrated Vehicle with Orbiter Nozzle Gimbaled. 102

8. SSME Nozzle Loads Nomenclature. 103

INDEX OF DATA FIGURES

TITLE	PLOTTED COEFFICIENTS SCHEDULE	CONDITIONS VARYING	PLOT PAGES
Plume size effects on longitudinal characteristics	A	OPR, SRMPR, MACH	1-10
Plume size effects on lateral characteristics	B	OPR, SRMPR, MACH	11-18
Plume size and rudder deflection effect on longitudinal characteristics	A	OPR, SRMPR, MACH	19-28
Plume size and rudder deflection effect on lateral characteristics	B	OPR, SRMPR, MACH	29-36
Plume size and nozzle gimbal angle effects on longitudinal characteristics	A	OPR,SRMPR,GP1,GP2,GP3, GP4, MACH, Configuration	37-46
Plume size and nozzle gimbal angle effects on lateral characteristics	B	OPR,SRMPR,GP1,GP2,GP3, GP4, MACH, Configuration	47-54
Hose and sting hardware effects on longitudinal characteristics	A	MACH, Hose, Configuration	55-64
Hose and sting hardware effects on lateral characteristics	B	MACH, Hose, Configuration	65-72
Plume effect on upper MPS nozzle pressure distribution	C	OPR, SRMPR, POWER ALPHA, X/DE, BETA	73-96
Plume effect on lower LH MPS nozzle pressure distribution	C	OPR, SRMPR, POWER ALPHA, X/DE, BETA	97-120
Plume effect on lower RH MPS nozzle pressure distribution	C	OPR, SRMPR, POWER ALPHA, X/DE, BETA	121-144
Delta pressure distribution, upper MPS nozzle	D	OPR, SRMPR, POWER ALPHA, X/DE, BETA	145-168

INDEX OF DATA FIGURES (Continued)

TITLE	PLOTTED COEFFICIENTS SCHEDULE	CONDITIONS VARYING	PLOT PAGES
Delta pressure distribution, lower LH MPS nozzle	D	OPR, SRMPR, POWER ALPHA, X/DE, BETA	169-192
Delta pressure distribution, lower RH MPS nozzle	D	OPR, SRMPR, POWER ALPHA, X/DE, BETA	193-216
Delta pressure distribution, upper MPS nozzle	E	OPR, SRMPR, POWER ALPHA, X/DE, BETA	217-240
Delta pressure distribution, lower LH MPS nozzle	E	OPR, SRMPR, POWER ALPHA, X/DE, BETA	241-264
Delta pressure distribution, lower RH MPS nozzle	E	OPR, SRMPR, POWER ALPHA, X/DE, BETA	265-288
Plume effect on upper MPS nozzle local load distributions	F	ALPHA, BETA OPR, SRMPR, POWER MACH, Gimbal angles	289-320
Plume effect on lower LH MPS nozzle local load distributions	F	ALPHA, BETA OPR, SRMPR, POWER MACH, Gimbal angles	321-352
Plume effect on lower RH MPS nozzle local load distributions	F	ALPHA, BETA OPR, SRMPR, POWER MACH, Gimbal angles	353-384
Plume effect on upper MPS nozzle total loads	G	OPR, SRMPR, POWER MACH	385-392
Plume effect on upper MPS nozzle total loads	H	OPR, SRMPR, POWER MACH	393-400

INDEX OF DATA FIGURES (Continued)

TITLE	PLOTTED COEFFICIENTS SCHEDULE	CONDITIONS VARYING	PLOT PAGES
Plume effect on lower LH MPS nozzle total loads	G	OPR, SRMPR, POWER MACH	401-408
Plume effect on lower LH MPS nozzle total loads	H	OPR, SRMPR, POWER MACH	409-416
Plume effect on lower RH MPS nozzle total loads	G	OPR, SRMPR, POWER MACH	417-424
Plume effect on lower RH MPS nozzle total loads	H	OPR, SRMPR, POWER MACH	425-432
Plume size effects on wing pressure distribution	I	OPR, SRMPR, MACH ALPHA, ETA, Configuration	433-448
Plume and nozzle gimbal angle effects on wing pressure distributions	I	GP1,GP2,GP4, ALPHA ETA, OPR, SRMPR, MACH Configuration	449-464
Hose and sting hardware effects on wing pressure	I	MACH, Hose, ALPHA, ETA, Configuration	465-480

PLOTTED COEFFICIENTS SCHEDULE:

A. CAF, CAB, CN, CLMF vs ALPHA; CN vs CLMF

B. CY, CBL, CYN vs BETA; CY vs CYN

C. CP vs PHI

D. DELCP vs Y/DE

E. DELCP vs Z/DE

INDEX OF DATA FIGURES (Concluded)

PLOTTED COEFFICIENTS SCHEDULE:
(Concluded)

F. DCN/DX, DCY/DX, DCLM/DX, DCYN/DX vs X/DE

G. CN, CY, CLM, CYN, CFR, THETAF, CMR, THETAM vs ALPHA

H. CN, CY, CLM, CYN, CRF, THETAF, CMR, THETAM vs BETA

I. CP vs X/C

NOMENCLATURE

SYMBOL	PLOT SYMBOL	DEFINITION
Ab_{ACPS}		Attitude control propulsion system base area, ft^2 (total for two)
Ab_{EOHT}		External tank total base area (cavity plus model base), ft^2
Ab_{OMS}		Base area of orbital maneuvering system (minus projected area of OMS nozzle), ft^2 (total for two)
Ab_{OMSN}		Nozzle exit area of OMS, ft^2 (total for two)
Ab_{ORB}		Total orbiter base area (minus projected exit area of MPS nozzles), ft^2
Ab_{SRM}		SRM shroud base area (minus projected nozzle exit area), (total for two), ft^2
Ac_{EOHT}		External tank cavity area, ft^2
Ac_{ORB}		Orbiter cavity area, ft^2
Ac_{SRM}		SRM cavity area, ft^2 (total for two)
A_{NORB}		Total exit area of (3) orbiter MPS nozzles, ft^2
A_{NSRM}		Total exit area of (2) SRM nozzles, ft^2
a		Distance from N_1 gage to MRP (positive forward of MRP), inches
b	BREF	Wing span or reference span; m, ft
b_w		Orbiter exposed wing panel semi-span (distance from exposed root chord to tip chord), inches
$\bar{c}_e$		Elevon M.A.C. length, inches
c.g.		Center of gravity
$\bar{c}_r$		Rudder M.A.C. length, inches

NOMENCLATURE (Continued)

SYMBOL	PLOT SYMBOL	DEFINITION
$C_{A_{BAL}}$		Balance chord force coefficient (uncorrected)
$C_{A_{b_{ACPS}}}$		Attitude control maneuvering system base chord force coefficient
$C_{A_{b_{EOHT}}}$		External tank base chord force coefficient (based on $A_{b_{EOHT}}$)
$C^*_{A_{b_{EOHT}}}$		External tank base chord force coefficient (based on $A_{C_{EOHT}}$)
$C_{A_{b_{OMS}}}$		Orbital maneuvering system base chord force coefficient
$C_{A_{b_{OMSN}}}$		Orbital maneuvering system nozzle base chord force coefficient
$C_{A_{b_{ORB}}}$		Orbiter base chord force coefficient (based on $A_{b_{ORB}}$)
$C^*_{A_{b_{ORB}}}$		Orbiter base chord force coefficient (based on $A_{C_{ORB}}$)
$C_{A_{b_{SRM}}}$		SRM base chord force coefficient (based on $A_{b_{SRM}}$)
$C^*_{A_{b_{SRM}}}$		SRM base chord force coefficient (based on $A_{C_{SRM}}$)
$C_{A_{C_{EOHT}}}$		External tank cavity chord force coefficient (corrected to base pressure)
$C^*_{A_{C_{EOHT}}}$		External tank cavity chord force coefficient (based on $A_{C_{EOHT}}$ and EOHT cavity pressures)
$C_{A_{C_{ORB}}}$		Orbiter cavity chord force coefficient (corrected to base pressure)
$C^*_{A_{C_{ORB}}}$		Orbiter cavity chord force coefficient (based on $A_{C_{ORB}}$ and orbiter cavity pressures)
$C_{A_{C_{SRM}}}$		SRM cavity chord force coefficient (corrected to base pressure)

NOMENCLATURE (Continued)

SYMBOL	PLOT SYMBOL	DEFINITION
$C_{\overset{*}{A}_{C_{SRM}}}$		SRM cavity chord force coefficient (based on $A_{C_{SRM}}$ and SRM cavity pressures)
$C_{A_{N_{ORB}}}$		Orbiter nozzle chord force coefficient
$C_{A_{N_{SRM}}}$		SRM nozzle chord force coefficient
C_{A_f}	CAF	Ascent vehicle forebody chord force coefficient
C_{A_T}	CA	Ascent vehicle total chord force coefficient
C_{ℓ}	CBL	Ascent vehicle rolling moment coefficient
C_{B_W}	CBW	Wing bending moment coefficient about exposed root chord
C_{FR}	CFR	Resultant force of the normal force and side force for the nozzle, based on a reference area of 49.4 ft^2
$C_{H_{e_I}}$	CHEI	Inboard elevon hinge moment coefficient
$C_{H_{e_O}}$	CHEO	Outboard elevon hinge moment coefficient
$C_{H_{e_t}}$		Total elevon hinge moment coefficient, $C_{H_{e_I}} + C_{H_{e_O}}$
C_{H_r}	CHR	Rudder hinge moment coefficient
C_{H_W}	CHW	Wing torsional moment coefficient
C_{MR}	CMR	Resultant moment of the pitching moment and yawing moment for the nozzle, based on a reference area of 49.4 ft^2
C_{m_f}	CLMF	Ascent vehicle forebody pitching moment coefficient
C_{m_t}	CLM	Ascent vehicle total pitching moment coefficient

NOMENCLATURE (Continued)

SYMBOL	PLOT SYMBOL	DEFINITION
$C_{m_{BAL}}$		Balance pitching moment coefficient
C_N	CN	Ascent vehicle normal force coefficient
C_{N_W}	CNW	Normal force coefficient on one exposed wing panel
$C_{P(\ )}$		Wing, base, cavity, and upper MPS nozzle pressure coefficient
C_Y	CY	Ascent vehicle side force coefficient
C_n	CYN	Ascent vehicle yawing moment coefficient
$\bar{c}_W$		Mean aerodynamic chord of exposed wing panel (based on S_W), inches
ΔC_p	DELCP	Incremental pressure distribution between opposite sides of the MPS nozzles (see table II, p. 59)
ΔSRMPR	DSRMPR	Incrementation SRM nozzle pressure ratio, (power on - power off)
ΔOPR	DOPR	Increment in orbiter nozzle pressure ratio, (power on - power off)
$\Delta\frac{\partial C_{af}}{\partial \delta_r}$	DDCAFR	Incremental effect of power on axial force coefficient rudder effectiveness
$\Delta\frac{\partial C_N}{\partial \delta_r}$	DDCNDR	Incremental effect of power on normal force coefficient rudder effectiveness
$\Delta\frac{\partial C_{mf}}{\partial \delta_r}$	DDCMFR	Incremental effect of power on pitching moment coefficient rudder effectiveness; includes forebody axial force
$\Delta\frac{\partial C_y}{\partial \delta_r}$	DDCYDR	Incremental effect of power on side-force coefficient rudder effectiveness

NOMENCLATURE (Continued)

SYMBOL	PLOT SYMBOL	DEFINITION
$\Delta\frac{\partial C_\ell}{\partial \delta_r}$	DDCBLR	Incremental effect of power on rolling moment coefficient rudder effectiveness
$\Delta\frac{\partial C_n}{\partial \delta_r}$	DDCYNR	Incremental effect of power on yawing moment coefficient rudder effectiveness
$\frac{\partial C_{A_f}}{\partial \delta_r}$	DCAFDR	Forebody axial force coefficient rudder effectiveness
$\frac{\partial C_N}{\partial \delta_r}$	DCN/DR	Normal force coefficient rudder effectiveness
$\frac{\partial C_{m_f}}{\partial \delta_r}$	DCMFDR	Pitching moment coefficient rudder effectiveness; includes forebody axial force effect
$\frac{\partial C_y}{\partial \delta_r}$	DCY/DR	Side force coefficient rudder effectiveness
$\frac{\partial C_\ell}{\partial \delta_r}$	DCBLDR	Rolling moment coefficient rudder effectiveness
$\frac{\partial C_n}{\partial \delta_r}$	DCYNDR	Yawing moment coefficient rudder effectiveness
$\partial C_m/\partial(x/de)$	DCLM/DX DCNMDX	Local pitching moment coefficient distribution with respect to x/d_e
$\partial C_N/\partial(x/de)$	DCN/DX	Local normal force coefficient distribution with respect to x/d_e
$\partial C_Y/\partial(x/de)$	DCY/DX	Local side force coefficient distribution with respect to x/d_e
$\partial C_n/\partial(x/de)$	DCYN/DX DCYNDX	Local yawing moment coefficient distribution with respect to x/d_e

NOMENCLATURE (Continued)

SYMBOL	PLOT SYMBOL	DEFINITION
$\frac{\partial C_N}{\partial \alpha}$	CN/A	Normal force coefficient derivative with respect to alpha
$\frac{\partial C_{m_f}}{\partial \alpha}$	CLMF/A	Pitching moment coefficient derivative with respect to alpha; includes forebody axial force effect
$\frac{\partial C_Y}{\partial \beta}$	CY/B	Side force coefficient derivative with respect to beta
$\frac{\partial C_\ell}{\partial \beta}$	CBL/B	Rolling moment coefficient derivative with respect to beta
$\frac{\partial C_n}{\partial \beta}$	CYN/B	Yawing moment coefficient derivative with respect to beta
$x(a.c.)_{\alpha}/\ell_{V}$	XAC/L	Longitudinal location of the aerodynamic center in pitch (XAC/L) and yaw (XYAC/L) based on an overall ascent vehicle length of 2175 inches F.S.
$x(a.c.)_{\beta}/\ell_{V}$	XYAC/L	
$\Delta\frac{\partial C_N}{\partial \alpha}$	DCN/A	Incremental effect of power on normal force coefficient alpha derivative
$\Delta\frac{\partial C_{m_f}}{\partial \alpha}$	DCMF/A	Incremental effect of power on pitching moment coefficient alpha derivative; forebody axial force effect included
$\Delta\frac{\partial C_Y}{\partial \beta}$	DCY/B	Incremental effect of power on side force coefficient beta derivative
$\Delta\frac{\partial C_\ell}{\partial \beta}$	DCBL/B	Incremental effect of power on rolling moment coefficient beta derivative

NOMENCLATURE (Continued)

SYMBOL	PLOT SYMBOL	DEFINITION
$\Delta\frac{\partial C_n}{\partial\beta}$	DCYN/B	Incremental effect of power on rolling moment coefficient beta derivative
$\Delta(X_{a.c.}/\ell)$	DXAC/L	Incremental effect of power on longitudinal center of pressure
$\Delta(Y_{a.c.}/\ell)$	DYAC/L	Incremental effect of power on lateral-directional center of pressure
$\Delta(C_N)$	DCN	Incremental effect of power on normal force coefficient
$\Delta(C_{A_f})$	DCAF	Incremental effect of power on forebody axial force coefficient
$\Delta(C_{A_b})$	DCAB	Incremental effect of power on base force coefficient
$\Delta(C_{m_f})$	DCLMF	Incremental effect of power on pitching moment coefficient
$\Delta(C_Y)$	DCY	Incremental effect of power on side force coefficient
$\Delta(C_n)$	DCYN	Incremental effect of power on yawing moment coefficient
$\Delta(C_\ell)$	DCBL	Incremental effect of power on rolling moment coefficient
d		Distance from N_2 gage to MRP (positive forward of MRP) inches
d_e, D_{Ex}		Diameter of nozzle at exit plane
D_{IN}		Diameter of nozzle at entrance plane
D_T		Diameter of nozzle at throat
e		Distance from MRP to balance centerline (positive above MRP)

NOMENCLATURE (Continued)

SYMBOL	PLOT SYMBOL	DEFINITION
f		Distance from MRP to Y_1 gage (positive forward of MRP)
	GP1	Upper orbiter nozzle; degrees of pitch that the engine is gimballed from null
	GP2	Lower left orbiter nozzle; degrees of pitch that the engine is gimballed from null
	GP3	Lower right orbiter nozzle; degrees of pitch that the engine is gimballed from null
	GP4	Left SRM nozzle
	GP5	Right SRM nozzle
	GY1	Upper orbiter nozzle; degrees of yaw that the engine is gimballed from null
	GY2	Lower left orbiter nozzle; degrees of yaw that the engine is gimballed from null
	GY3	Lower right orbiter nozzle; degrees of yaw that the engine is gimballed from null
$G_{P(\ )}$		Gimbal pitch angle of nozzle from null position (denoted by subscript), degrees
$G_{Y(\ )}$		Gimbal yaw angle of nozzle from null position (denoted by subscript), degrees
g		Distance from MRP to Y_2 gage (positive forward of MRP), inches
i		Incidence angle of orbiter reference plane with respect to EOHT reference plane, degrees
$K_{e(\ )}$		Elevon hinge moment gage calibration factor (subscript denotes inboard or outboard) in.-lb/cts

NOMENCLATURE (Continued)

SYMBOL	PLOT SYMBOL	DEFINITION
$K_{r_{pe}}$		Ratio of measured to theoretical exit pressure P_e meas/P_{etrue}
K_r		Rudder hinge moment gage calibration factor, in.-lbs/cts
K_{ij}		Wing gage calibration factor, in.-lb/ct where i = gage number and j = order of K in the second degree calibration curve fit
ℓ		Rolling moment balance output, in.-lbs
ℓ_{REF}	LREF	Ascent vehicle moment reference length, inches
M_∞	MACH	Tunnel freestream Mach number
$m_{1,2,3}$,		Wing strain gage output (uncorrected for interactions) in.-lbs; where 1 is the inboard bending gage, 2 is the outboard bending gage, and 3 is the torsion gage
$M_{1,2,3}$		Wing strain gage output which has been corrected for interactions, in.-lbs; where 1 is the inboard bending gage, 2 is the outboard bending gage, and 3 is the torsion gage
$m'_{1,2,3}$		Wing strain gage output, raw data counts, where 1 is the inboard bending gage, 2 is the outboard bending gage, and 3 is the torsion gage
$m'_{e}\,(\;)$		Elevon hinge moment gage output, raw data counts where subscript denotes inboard or outboard panel
	MPSRA	Orbiter MPS nozzle rotation angle, deg.
m'_r		Rudder hinge moment gage output, raw data counts

NOMENCLATURE (Continued)

SYMBOL	PLOT SYMBOL	DEFINITION
$MRP_{(X,Y,Z)}$	XMRP YMRP ZMRP	Moment reference point in X,Y,Z coordinates, inches
N_1		Forward normal force gage output, pounds
N_2		Aft normal force gage output, pounds
N_W		Normal force on exposed wing panel, pounds
P_{c}/P_{t}	OPR	Ratio of orbiter chamber pressure (P_c) to freestream total pressure
P( )		Model pressure, psfa
$P_{c(\;)}$		Nozzle plenum total pressure denoted by a subscript
$P_{e(\;)}$		Nozzle exit static pressure (denoted by a subscript), psia
P_∞		Tunnel static pressure, psfa
Power	POWER	Nozzle power supply: Power = 1.0 - ON Power = 0.0 - OFF
P_t		Tunnel total pressure, psfa
P_c/P_∞		Ratio of plenum total pressure to freestream pressure
P_e/P_t	SRMPR	Ratio of SRM nozzle exit pressure to freestream total pressure
P_c/P_t, $RP_{C(\;)}$		Ratio of plenum total pressure to P_t, denoted by a subscript
P_e/P_t, $RP_{e(\;)}$		Ratio of nozzle exit static pressure to P_t, denoted by a subscript
q	Q(PSF)	Tunnel freestream dynamic pressure, psf
R_n/L	RN/L	Tunnel Reynolds number, per foot
R		Orbiter MPS nozzle local radius.

NOMENCLATURE (Continued)

SYMBOL	PLOT SYMBOL	DEFINITION
r/r^*		Ratio of the local radius to the critical throat radius for the MPS nozzles
S_e		Elevon area (total one side) ft^2
S_N		Reference area for nozzle, ft^2
S_r		Rudder area, ft^2
S_{REF}	SREF	Ascent vehicle coefficient reference area, ft^2
S_W		Area of one exposed wing panel (includes glove area), ft
T_∞		Tunnel freestream static temperature, °R
T_t		Tunnel total temperature, °R
W_{F_i}		Model pressure weighting factor, either 0 or 1
X		Distance forward of nozzle exit plane
x/c	X/C	Chord-wise wing location, fraction of the chord
x/d_e	X/DE	Ratio of the distance forward of the nozzle exit to the internal diameter of the nozzle exit
x/r^*		Ratio of the distance forward of the nozzle exit to the critical throat radius of the MPS nozzles
X_G		Distance from orbiter MPS nozzle gimbal to exit plane
X_{HL}		Orbiter station of exposed wing torsional axis, inches

NOMENCLATURE (Continued)

SYMBOL	PLOT SYMBOL	DEFINITION
X_o		Orbiter longitudinal station, inches
X_T		EOHT longitudinal station, inches
X_W		Distance between wing bending gage m_1 and m_2, inches
Y_o		Orbiter spanwise station, inches
Y_{ROOT}		Orbiter spanwise station of exposed wing root chord, inches
Y_T		EOHT spanwise station, inches
Y		Spanwise distance from the exposed wing root chord to the m_2 gage (positive when m_2 gage is outboard of reference station), model scale inches
y/d_e	Y/DE	Lateral distance from the nozzle centerline as a fraction of the nozzle exit internal diameter
$Z_{b_{ACPS}}$		Vertical distance from centroid of ACPS base area to MRP (positive above MRP), inches
$Z_{b_{EOHT}}$		Vertical distance from centroid of EOHT base area to MRP (positive above MRP), inches
$Z_{b_{OMS}}$		Vertical distance from centroid of OMS base area to MRP (positive above MRP), inches
$Z_{b_{OMSN}}$		Vertical distance from centroid of OMS nozzle base area to MRP (positive above MRP), inches
$Z_{b_{ORB}}$		Vertical distance from centroid of ORB base area to MRP (positive above MRP), inches

NOMENCLATURE (Continued)

SYMBOL	PLOT SYMBOL	DEFINITION
$Z_{b_{SRM}}$		Vertical distance from centroid of SRM base area to MRP (positive above MRP), inches
$Z_{C_{EOHT}}$		Vertical distance from centroid of EOHT cavity area to MRP (positive above MRP), inches
$Z_{C_{ORB}}$		Vertical distance from centroid of orbiter cavity area to MRP (positive above MRP), inches
$Z_{C_{SRM}}$		Vertical distance from centroid of SRM cavity area to MRP (positive above MRP), inches
$Z_{N_{ORB}}$		Vertical distance from centroid of orbiter nozzle exit area to MRP (positive above MRP), inches
$Z_{N_{SRM}}$		Vertical distance from centroid of SRM nozzle exit area to MRP (positive above MRP), inches
Z_O		Orbiter vertical station, inches
Z_T		EOHT vertical station, inches
z/d_e	Z/DE	Vertical distance from the nozzle centerline as a fraction of the nozzle exit internal diameter
α	ALPHA	Ascent vehicle angle of attack, degrees
β	BETA	Ascent vehicle angle of sideslip, degrees
γ		Angle of some radial direction in the base planes to the nozzle centerline, degrees
δ_a	AILRON	Aileron deflection defined as $(\delta_{a_L} - \delta_{a_R})/2$, degrees
δe	ELEVON	Elevon deflection defined as $(\delta_{e_L} + \delta_{e_R})/2$, degrees

NOMENCLATURE (Continued)

SYMBOL	PLOT SYMBOL	DEFINITION
δ_r	RUDDER	Rudder deflection, degrees
$\left(\frac{\partial m_1}{\partial m_2}\right)_{(\ )}, \ldots,$	$\left(\frac{\partial m_3}{\partial m_1}\right)_{(\ )}$	First order interaction for wing bending and torsion gages. (1) denotes first order term in a 2nd degree curve fit, (2) denotes second order term in a 2nd degree curve fit
η	ETA	Spanwise wing station, fraction of the semi-span
$\theta_{F R}$	THETAF	Angle of resultant force, CFR, measured from top centerline of the nozzle, positive in a clockwise direction when looking forward, degrees
$\theta_{M R}$	THETAM	Angle of resultant moment, CMR, measured from top centerline of the nozzle, positive in a clockwise direction when looking forward, degrees
θ_N		Rotation angle of MPS nozzles in ball sockets (clockwise rotation as looking forward is positive), degrees
ϕ	PHI	Radial angle on MPS nozzles with $\phi = 0^\circ$ on top, $\phi = 90^\circ$ on the right side, $= 180^\circ$ on bottom, and $\phi = 270^\circ$ on left side, degrees
ψ	PSI	Nozzle angle of yaw, degrees

SUBSCRIPTS	DEFINITION
a	aileron
ACPS	attitude control propulsion system
b	base
e	elevon
EOHT	external oxygen hydrogen tank

NOMENCLATURE (Concluded)

SUBSCRIPTS	DEFINITION
I	inboard
l	local
L	left
O	outboard
OMS	orbital maneuvering system
OMSN	orbital maneuvering system nozzle
ORB, o	orbiter
r	rudder
R	right
s	static conditions
SRM	solid rocket motor
t	total conditions
T	external tank
W	wing
1	top MPS nozzle
2	left MPS nozzle
3	right MPS nozzle
4	left SRM nozzle
5	right SRM nozzle
∞	free stream

CONFIGURATION DESCRIPTION

The model test was an 0.019 scale representation of the Rockwell/NASA configuration of the integrated space shuttle vehicle. The model had the capability of cold jet simulation of the jet plumes generated from the SRM and MPS nozzles.

The 2A orbiter was rigidly attached to the EOHT at 0° incidence with respect to the EOHT centerline. The orbiter MPS nozzles were attached to the non-metric air supply system which runs through the sting.

The 4 configuration EOHT was mounted on a 2.5 inch sting mounted internal balance.

The 4 configuration SRM's were rigidly attached to the EOHT with the SRM centerline on waterplane $X_T = 0.0''$ and butt plane $Y_T = 243''$ full scale. The nozzles could be deflected $\pm 7°$ pitch and $\pm 7°$ yaw.

The orbiter right-hand wing panel had forty (40) static pressure taps and the left-hand wing is attached to the orbiter by a single flexure three-component moment balance. The elevon panels on the left-hand wing panel were attached by means of single-component moment balances.

The vertical tail rudder had the capability of being deflected $\pm 10°$. The rudder panel was attached to the vertical tail by means of a single-component moment balance.

Nozzle Gimbal Angles & Reference Systems for Angle Measurement

The orbiter has three MPS nozzles whose individual gimbal points each define the origin of three separate reference systems. These reference systems are shown in figure 2.a. Positive indications of gimbal pitch and gimbal yaw are shown.

Figure 2.b. is an enlarged view of one of these reference systems. All three planes shown are at right angles to one another. The dashed lines are projections of the nozzle centerline onto the pitch and yaw planes of the reference system. (α) is the angle of pitch; either up or down. (ψ) is the angle of yaw; either right or left. Each nozzle is physically set to a gimbal angle of pitch and for yaw by an apparatus which measures (ϕ); some radial direction in the base plane, and (γ);the angle from that radial to the nozzle centerline. The ϕ sector is determined by (α) and (ψ):

ϕ	α	ψ
270° to 360°	0° to +90°	0° to +90°
180° to 270°	0° to -90°	0° to +90°
90° to 180°	0° to -90°	0° to -90°
0° to 90°	0° to +90°	0° to -90°

All test programs for this model use the symbol G_p as the angle that the centerline of the nozzle is pitched (up or down) and G_γ as the angle that the centerline of the nozzle is yawed (right or left). Up and left are both in the positive direction.

Since all angles are defined from the nozzle null position, the relationships are as follows:

(1) $G_p = \alpha - \alpha null$

(2) $G_\gamma = \psi - \psi null$

Where α_{null} is the angle that the nozzle centerline is pitched from the reference system axis to null position and ψ_{null} is the angle that the nozzle centerline is yawed from the reference system axis to null position (figure 2.b.).

$\alpha null$ and $\psi null$ are specified for each MPS nozzle in the dimensional data for N_9 and N_{10}. It should be noted here that a side view of the of the orbiter shows that the nozzle base plane is rotated 13° from vertical. Therefore, the three independent nozzle reference systems for nozzle pitch differ from the orbiter's X_0, Y_0, Z_0 reference system by a 13^0 rotation angle from vertical.

The following equations were used to convert nozzle gimbal angles α and ψ to ϕ and γ, the two angles that the fixture uses to duplicate the given angles:

(1) $$TAN\phi = \frac{-TAN\psi}{TAN\alpha}$$

(2) $$TAN\gamma = \frac{SIN\phi + COS\phi}{TAN\alpha - TAN\psi}$$

Also, for the following fixture settings, the angle $\theta = 90 - \gamma$.

Top Nozzle:

Aero Setting		Fixture Setting ϕ	Fixture Setting θ
Null & Firing;	G_y, $G_p = 0$	0°	+3°
	$G_p = 11$	0°	+14°
	$G_p = -11$	180°	8°
	$G_y = 9$	288°	9.5°
	$G_y = -9$	71.7°	9.5°
	$G_p = 11$, G_y -9	32.5°	16.5°

Bottom Left Nozzle

Aero Setting		Fixture Setting ϕ	Fixture Setting θ
Firing;	$G_y = -3.5$	180°	3°
	$G_p = 11$	336.5°	8.7°
	$G_p = -11$	193.6°	14.4°
	$G_y = 9$	256.7	12.8°
	$G_y = -9$	118.3°	6.2°
	$G_p = 11, G_y = -9$	34.42	9.7°
	$G_p, G_y = 0$	229.4°	4.6°

Bottom Right Nozzle:

Aero Setting		Fixture Setting	
		ϕ	θ
Firing;	$G_y = 3.5$	180°	3°
	$G_p = 11$	23.5°	8.7°
	$G_p = -11$	166.2°	14.4°
	$G_y = 9$	241.8°	6.2°
	$G_y = -9$	103.3°	12.8°
	$G_p = 11$, $G_p = -9$	57.7°	14.7°
	$G_y, G_p = 0$	130.6°	4.6°

Model Nomenclature

The following nomenclature will be used to designate model components:

Component	Definition
B_{10}	Body
C_5	Canopy
D_7	Manipulator Housing
W_{87}	Wing
E_{18}	Elevon
V_5	Vertical Tail
R_5	Rudder
M_3	OMS Pod
N_8	OMS NOZZLES
N_9	ORBITER NOZZLES

Component	Definition
N_{10}	ORBITER PRESSURE NOZZLES
F_4	Body Flap
X_8	Transition Strip
S_{10}	SRM
N_{17}	SRM Nozzle
T_{10}	EOHT

The following table shows OTS configurations and their corresponding descriptions:

Configuration	Description
$O_1T_1S_1$	Baseline (2A): B_{10}, C_5, D_7, F_4, M_3, N_8, N_9, N_{17}, V_5, R_5, W_{87}, E_{18}, X_8, S_{10}, T_{10}
$O_2T_1S_1$	Baseline (2A) with static taps on three MPS nozzles: B_{10}, C_5, D_7, F_4, M_3, N_8, N_{10}, N_{17}, V_5, R_5, W_{87}, E_{18}, X_8, S_{10}, T_{10}

TEST FACILITY DESCRIPTION

The 8-Foot Transonic Wind Tunnel was placed in operation in December of 1956 as the result of modernizing the 12-Foot Variable Density Wind Tunnel to extend its operation through the transonic range. The tunnel has a perforated throat and an auxiliary pumping system for plenum pumping. The continuous circuit tunnel is capable of operating from 1/6 to 2-1/2 atmospheres total pressure, thereby providing a wide range of test Reynolds numbers as well as Mach numbers. The range of operating pressures is necessarily limited by the total power available at the higher Mach numbers. Pumping the tunnel to these conditions is done by four centrifugal compressors for above one atmosphere testing and by seven compressors for below one atmosphere. Evacuation of the tunnel to 800 psf total pressure can be accomplished by use of the auxiliary compressor from atmospheric pressure. This procedure takes approximately 8 minutes. Consequently, at least an initial expenditure of time is necessary to bring the tunnel to the desired operating conditions. During model changes, two gate valves isolate the test section from the tunnel proper, making it necessary to bring only the test sphere to atmospheric conditions. By careful planning of the test program, it is then possible to reduce pumping time to a minimum.

The test section of the tunnel is a removable cart. In many instances this feature permits the installation of a model prior to testing, resulting in a saving of tunnel time. Three carts are in active use: a sting cart for the testing of sting-mounted, full-span models, a reflection plane cart for use with semi-span reflection plane models, and the fairing cart for full-span models mounted from a plate.

Low speed airflow calibrations have been performed for free-stream velocities from 5 to 90 feet per second. Velocities in this range are steady and can be set accurately using a fixed main drive blade angle and varying the rpm. Low speed tests may be run within the operating tunnel densities of 1/6 of an atmosphere to 2.5 atmospheres.

More explicit details of the tunnel and its operational characteristics can be found in the 8-Foot Transonic Wind Tunnel Report WTO-300 at Cornell Aeronautical Laboratory.

TESTING AND PROCEDURE

PRESSURE INSTRUMENTATION

The right hand orbiter wing panel was instrumented with forty (40) static pressure taps. A total of sixteen (16) base and cavity taps were installed for use in correcting chord force measurements.

The orbiter MPS nozzles each had twelve (12) external static taps at various radial and longitudinal locations.

JET PLUME SIMULATION

The CALSPAN high pressure air supply was utilized for cold jet plume simulation of the jet plumes emanating from the orbiter MPS and SRM nozzles. The orbiter MPS and SRM nozzles had independent controls for separate throttling of each system of nozzles. Plume shapes for various Mach numbers were produced by setting specific values of P_c/P_t for the orbiter nozzles and P_e/P_t for the SRM nozzles. An error in the calibration of the air supply system resulted in inaccurate settings of the SRM nominal pressure ratios during the test. Listed below are theoretical and actual values of the pressure ratios.

NOZZLE	M_∞	P_c/P_∞ THEORETICAL (NOMINAL)	P_c/P_∞ ACTUAL	P_e/P_t THEORETICAL (NOMINAL)	P_e/P_t ACTUAL	P_c/P_t THEORETICAL (NOMINAL)	P_c/P_t ACTUAL
Orbiter	.9	47.87	47.87	.3370	.3370	28.31	28.31
Orbiter	1.2	93.77	93.77	.4310	.4310	36.20	36.20
SRM	.9	155	167	1.878	2.02	91.97	98.9
SRM	1.2	266	308	2.105	2.33	102.703	119.0

FORCE INSTRUMENTATION

The EOHT was mounted on the CALSPAN 2.5 inch Task MK III six-component internal balance. The model angle of attack was indicated by an NASA/AMES dangleometer and angle of sideslip was indicated by the sector read out plus sting/balance deflections. The sting was mounted on the CALSPAN double roll mechanism.

HINGE MOMENT INSTRUMENTATION

The left hand wing panel was mounted on a single-flexure, three-component moment balance. The two elevons of the left hand wing panel and the rudder were each instrumented with single-component moment balances.

REMARKS

Data were obtained at angles of attack from -8° to +6° at $\beta = 0°$, and angles of sideslip from -6° to +6° at $\alpha = 0°$ for run number 15 through 116. The high pressure supply hoses were removed from the sting for runs 117 through 120 so that angle of attack could be obtained from -8° to +8° at $\beta = 0°$ and angle of sideslip from -8° to +8° at $\alpha = 0°$.

The MPS nozzle pressure loads were obtained during runs 19 through 78. Wing and top MPS pressure ($\theta_N = 0°$) data were obtained during runs 81 through 120. For runs 81 through 120, wing taps 106, 107, 108, 109, 214, 215, 309, 310, 412 were not measured so that top MPS nozzle taps 1, 3, 4, 5, 6, 7, 9, 10, 11 and 12 could be measured. The high pressure air supply hoses were removed from the test section during runs 117 through 120 to determine if the hoses affected the force and pressure data.

DATA REDUCTION

The balance data were reduced to coefficient form and corrected for all appropriate tunnel corrections, sting/balance deflections, and tares.

The reference area, S_{REF}, for all ascent vehicle coefficients is the theoretical wing total planform area. The reference length, ℓ_{REF}, for the pitching, rolling, and yawing moment coefficients is the fuselage body length. Chord force and pitching moment balance coefficients were adjusted for the effect of cavity pressures according to the following equations:

Ascent vehicle total chord force coefficient (C_A):

$$C_{A_T} = C_{A_{BAL}} + C_{A_{C_{ORB}}} + C_{A_{C_{EOHT}}} + C_{A_{C_{SRM}}} + C_{A_{N_{ORB}}} + C_{A_{N_{SRM}}}$$

where:

$$C_{A_{C_{ORB}}} = -C^{\star}_{A_{C_{ORB}}} + C^{\star}_{A_{b_{ORB}}}$$

$$C_{A_{C_{EOHT}}} = -C^{\star}_{A_{C_{EOHT}}} + C^{\star}_{A_{b_{EOHT}}}$$

$$C_{A_{C_{SRM}}} = -C^{\star}_{A_{C_{SRM}}} + C^{\star}_{A_{b_{SRM}}}$$

$$C^{\star}_{A_{C_{ORB}}} = - \frac{\sum\limits_{i=101}^{102} C_{P_i}}{\sum\limits_{i=101}^{102} WF_i} \quad \frac{A_{C_{ORB}}}{S_{REF}}$$

$$C^{\star}_{A_{b_{ORB}}} = - \frac{\sum\limits_{i=201}^{204} C_{P_i}}{\sum\limits_{i=201}^{204} WF_i} \quad \frac{A_{C_{ORB}}}{S_{REF}}$$

$$C_{A_{N_{ORB}}} = - \frac{\sum\limits_{i=201}^{204} C_{P_i}}{\sum\limits_{i=201}^{204} WF_i} \quad \frac{A_{N_{ORB}}}{S_{REF}}$$

$$C^{*}_{A_{C_{EOHT}}} = - \frac{\sum\limits_{i=303}^{304} C_{P_i}}{\sum\limits_{i=303}^{304} WF_i} \quad \frac{A_{C_{EOHT}}}{S_{REF}}$$

$$C^{*}_{A_{b_{EOHT}}} = - \frac{\sum\limits_{i=301}^{302} C_{P_i}}{\sum\limits_{i=301}^{302} WF_i} \quad \frac{A_{C_{EOHT}}}{S_{REF}}$$

$$C^{*}_{A_{C_{SRM}}} = - \frac{\sum\limits_{i=103}^{104} C_{P_i}}{\sum\limits_{i=103}^{104} WF_i} \quad \frac{A_{C_{SRM}}}{S_{REF}}$$

$$C^{*}_{A_{b_{SRM}}} = \frac{\sum\limits_{i=401}^{404} C_{P_i}}{\sum\limits_{i=401}^{404} WF_i} \quad \frac{A_{C_{SRM}}}{S_{REF}}$$

$$C_{A_{N_{SRM}}} = \frac{\sum\limits_{i=401}^{404} C_{P_i}}{\sum\limits_{i=401}^{404} WF_i} \quad \frac{A_{N_{SRM}}}{S_{REF}}$$

Ascent vehicle total pitching moment coefficient (C_{m_t}):

$$\begin{aligned} C_{m_t} = C_{m_{BAL}} &- \overset{*}{C}_{A_{C_{ORB}}} \left[\frac{z_{C_{ORB}}}{\ell_{REF}}\right] + \overset{*}{C}_{A_{b_{ORB}}} \left[\frac{z_{C_{ORB}}}{\ell_{REF}}\right] \\ &+ C_{A_{N_{ORB}}} \left[\frac{z_{N_{ORB}}}{\ell_{REF}}\right] - \overset{*}{C}_{A_{C_{EOHT}}} \left[\frac{z_{C_{EOHT}}}{\ell_{REF}}\right] + \overset{*}{C}_{A_{b_{EOHT}}} \left[\frac{z_{C_{EOHT}}}{\ell_{REF}}\right] \\ &- \overset{*}{C}_{A_{C_{SRM}}} \left[\frac{z_{C_{SRM}}}{\ell_{REF}}\right] + \overset{*}{C}_{A_{b_{SRM}}} \left[\frac{z_{C_{SRM}}}{\ell_{REF}}\right] + C_{A_{N_{SRM}}} \left[\frac{z_{N_{SRM}}}{\ell_{REF}}\right] \end{aligned}$$

$$\begin{aligned} C_{m_T} = C_{m_{BAL}} &+ C_{A_{C_{ORB}}} \left[\frac{z_{C_{ORB}}}{\ell_{REF}}\right] + C_{A_{N_{ORB}}} \left[\frac{z_{N_{ORB}}}{\ell_{REF}}\right] + C_{A_{C_{EOHT}}} \left[\frac{z_{C_{EOHT}}}{\ell_{REF}}\right] \\ &+ C_{A_{C_{SRM}}} \left[\frac{z_{C_{SRM}}}{\ell_{REF}}\right] + C_{A_{N_{SRM}}} \left[\frac{z_{N_{SRM}}}{\ell_{REF}}\right] \end{aligned}$$

Forebody chord force coefficient (C_{A_f}):

$$C_{A_f} = C_{A_T} - C_{A_{b_{ORB}}} - C_{A_{b_{EOHT}}} - C_{A_{b_{SRM}}}$$

$$- C_{A_{b_{OMS}}} - C_{A_{b_{OMSN}}} - C_{A_{b_{ACPS}}}$$

where:

$$C_{A_{b_{ORB}}} = - \frac{\sum_{i=201}^{204} C_{p_i}}{\sum_{i=201}^{204} WF_i} \quad \frac{A_{b_{ORB}}}{S_{REF}}$$

$$C_{A_{b_{EOHT}}} = - \frac{\sum_{i=301}^{302} C_{p_i}}{\sum_{i=301}^{302} WF_i} \quad \frac{A_{b_{EOHT}}}{S_{REF}}$$

$$C_{A_{b_{SRM}}} = - \frac{\sum_{i=401}^{404} C_{p_i}}{\sum_{i=401}^{404} WF_i} \quad \frac{A_{b_{SRM}}}{S_{REF}}$$

$$C_{A_{b_{OMSN}}} = (C_{p_{305}}) \quad \frac{A_{b_{OMSN}}}{S_{REF}}$$

$$C_{A_{b_{OMS}}} = -(C_{p\ 105}) \frac{A_{b_{OMS}}}{S_{REF}}$$

$$C_{A_{b_{ACPS}}} = -(C_{p_{405}}) \frac{A_{b_{ACPS}}}{S_{REF}}$$

Ascent vehicle forebody pitching moment (C_{M_f}):

$$C_{m_f} = C_{m_t} - C_{A_{b_{ORB}}}\left[\frac{Z_{b_{ORB}}}{\ell_{REF}}\right] - C_{A_{b_{EOHT}}}\left[\frac{Z_{b_{EOHT}}}{\ell_{REF}}\right]$$

$$- C_{A_{b_{SRM}}}\left[\frac{Z_{b_{SRM}}}{\ell_{REF}}\right] - C_{A_{b_{OMS}}}\left[\frac{Z_{b_{OMS}}}{\ell_{REF}}\right]$$

$$- C_{A_{b_{OMSN}}}\left[\frac{Z_{b_{OMSN}}}{\ell_{REF}}\right] - C_{A_{b_{ACPS}}}\left[\frac{Z_{b_{ACPS}}}{\ell_{REF}}\right]$$

Wing, base, cavity, and upper MPS nozzle pressure coefficient (C_{p_i}):

$$C_{p_i} = \left(\frac{P_i - P_o}{q}\right)$$

Component hinge moment data:

The left hand wing panel was instrumented with a single-flexure three component moment balance. This balance was temperature compensated and gave accurate measurements at all tunnel temperatures.

The two elevons of the left hand wing panel and the rudder were each instrumented with single component moment balances. These balances were not temperature compensated and experienced large zero shifts during the test. During any specific pitch or yaw run, the zero shifts were negligible. However, during a series of pitch and yaw runs, the zero shifts happened at a point that cannot be determined. The sensitivity did not change. The tabulated data for these components ($C_{H_{e_I}}$, $C_{H_{e_O}}$, C_{H_r}) are presented and should be used for defining magnitude of the moment load.

Elevon hinge moment (C_{H_e}):

$$C_{H_{e_I}} = \frac{m'_{e_I}\, K_{e_I}}{q\, S_e\, \bar{c}_e} \text{ (Inboard)}$$

$$C_{H_{e_O}} = \frac{m'_{e_O} K_{e_O}}{q \, S_e \, \bar{c}_e} \text{ (outboard)}$$

$$C_{H_{e_T}} = C_{H_{e_I}} + C_{H_{e_o}}$$

where:

m' = raw cts

K = calibration factor (in.-lb/cts)

Rudder hinge moment (C_{H_r}):

$$C_{H_r} = \frac{m'_r K_r}{q \, S_r \, \bar{c}_r}$$

Wing bending and torsion:

Convert raw data counts to in.-lbs: (basic slopes)

where:

m' = raw data cts

K_{ij} = calibration factor (in.-lb/ct) and i = gage number
j = order of term of second degree curve fit

$m_1 = m'_1 K_{11} + (m'_1)^2 K_{12}$ (inboard gage)

$m_2 = m'_2 K_{21} + (m'_2)^2 K_{22}$ (outboard gage)

$m_3 = m'_3 K_{31} + (m'_3)^2 K_{32}$ (torsion gage)

Taking interactions into account:

$$M_1 = m_1 - \left[\left(\frac{\delta m_1}{\delta m_2}\right)_1 m_2 + \left(\frac{\delta m_1}{\delta m_2}\right)_2 (m_2)^2\right] - \left[\left(\frac{\delta m_1}{\delta m_3}\right)_1 m_3 + \left(\frac{\delta m_1}{\delta m_3}\right)_2 (m_3)^2\right]$$

$$M_2 = m_2 - \left[\left(\frac{\delta m_2}{\delta m_1}\right)_1 m_1 + \left(\frac{\delta m_2}{\delta m_1}\right)_2 (m_1)^2\right] - \left[\left(\frac{\delta m_2}{\delta m_3}\right)_1 m_3 + \left(\frac{\delta m_2}{\delta m_3}\right)_2 (m_3)^2\right]$$

$$M_3 = m_3 - \left[\left(\frac{\delta m_3}{\delta m_1}\right)_1 m_1 + \left(\frac{\delta m_3}{\delta m_1}\right)_2 (m_1)^2\right] - \left[\left(\frac{\delta m_3}{\delta m_2}\right)_1 m_2 + \left(\frac{\delta m_3}{\delta m_2}\right)_2 (m_2)^2\right]$$

Determine loads and coefficients:

$$N_W = \left(\frac{M_1 - M_2}{X_W}\right)$$

$$C_{N_W} = \frac{N_W}{q\ S_W}$$

$$C_{B_W} = \frac{(M_2 + Y_W\ N_W)}{q\ S_W\ b_W}$$

$$C_{H_W} = \frac{M_3}{q\ S_W\ C_W}$$

Jet plume parameters ($RP_{c(\ )}$, $RP_{e(\ )}$):

$$RP_{c(\ )} = 144\,\frac{P_{c(\ )}}{P_T}$$

$$RP_{e(\ )} = 144\,\frac{P_{e(\ )}}{P_T}\left[\frac{1}{K_{T_{pe}}}\right]$$

Reference Dimensions and Constants

	Full Scale	Model Scale
Ab_{ACPS}	28.42 ft^2	0.01026 ft^2
Ab_{EOHT}	572.56 ft^2	0.2067 ft^2
Ab_{OMS}	16.973 ft^2	0.00613 ft^2
Ab_{OMSN}	25.[illegible] ft^2	0.00925 ft^2
Ab_{ORB}	226.75 ft^2	0.08186 ft^2
Ab_{SRM}	183.01 ft^2	0.0661 ft^2
Ac_{EOHT}	366.5 ft^2	0.132 ft^2
Ac_{ORB}	302.40 ft^2	0.1092 ft^2
Ac_{SRM}	181.378 ft^2	0.0654 ft^2
$A_{N_{ORB}}$	141.44 ft^2	0.0511 ft^2
$A_{N_{SRM}}$	219.02 ft^2	0.0791 ft^2

	Full Scale	Model Scale
b_w	363.341	6.903
$\bar{c}_e$	90.7 in	1.723 in.
$\bar{c}_r$	74.4 in.	1.414 in.
$\bar{c}_w$	513.474 in.	9.756 in
d	—	-11.283 in.
e	—	0.0 in.
f	—	-3.533 in.
g	—	-10.533 in.
K_{e_I}	(Pos) = 26.20 $\frac{\text{in. -lb-v}}{\text{mv}}$	(Neg) = 26.39 $\frac{\text{in. -lb-v}}{\text{mv}}$
K_{e_o}	(Pos) = 27.03 $\frac{\text{in. -lb-v}}{\text{mv}}$	(Neg) = 27.42 $\frac{\text{in. -lb-v}}{\text{mv}}$
$K_{r_{pe}}$	(ORB) = 1.060	(SRM) = TBD
K_r	(Pos) = 20.80 $\frac{\text{in. -lb-v}}{\text{mv}}$	(Neg) = 20.885 $\frac{\text{in. -lb-v}}{\text{mv}}$
K_{11}	(Pos) = 463.1672 $\frac{\text{inlbv}}{\text{mv}}$	(Neg) = 476.3954 $\frac{\text{inlbv}}{\text{mv}}$
K_{12}	(Pos) = 0.0	(Neg) = 0.0
K_{21}	(Pos) = 436.8877 $\frac{\text{inlbv}}{\text{mv}}$	(Neg) = 437.4474 $\frac{\text{inlbv}}{\text{mv}}$
K_{22}	(Pos) = 0.0	(Neg) = 0.0
K31	(Pos) = 539.9926 $\frac{\text{inlbv}}{\text{mv}}$	(Neg) = 538.9718 $\frac{\text{inlbv}}{\text{mv}}$
K	(Pos) = 0.0	(Neg) = 0.0
ℓ_{REF}	1328.0 in	25.232 in.

	Full Scale	Model Scale
S_e	210.0 ft^2 per wing panel	0.0758 ft^2
S_r	106.38 ft^2	0.0384 ft^2
S_W	1006.5 ft^2	0.363 ft^2
S_{REF}	2690.0 ft^2	0.971 ft^2
X_W	—	0.5638 in.
X_{HL}	1250.79 in.	23.765 in.
y_W	—	0.1423 in.
Y_{ROOT}	105.0 in.	1.995 in.
$Z_{b_{ACPS}}$	402.987 in.	7.656 in.
$Z_{b_{EOHT}}$	0.0	0.0
$Z_{b_{OMS}}$	415.505 in.	7.895 in.
$Z_{b_{OMSN}}$	437.94 in.	8.321 in.
$Z_{b_{ORB}}$	310.0 in.	5.89 in.
$Z_{b_{SRM}}$	0.0	0.0
$Z_{c_{EOHT}}$	0.0	0.0
$Z_{C_{ORB}}$	349.66 in.	6.64 in.
$Z_{C_{SRM}}$	0.0	0.0

	Full Scale	Model Scale
$Z_{N_{ORB}}$	335.0 in.	6.36 in
$Z_{N_{SRM}}$	0.0	0.0
$\left(\frac{\partial M_1}{\partial M_2}\right)_1$	(Pos) = 0.0	(Neg) = 0.0

	Positive	Negative
$\left(\frac{\partial M_1}{\partial M_2}\right)_2$	0.0	0.0
$\left(\frac{\partial M_1}{\partial M_3}\right)_1$	$-0.010562 \frac{\text{inlbv}}{\text{mv}}$	$-0.004132 \frac{\text{inlbv}}{\text{mv}}$
$\left(\frac{\partial M_1}{\partial M_3}\right)_2$	0.0	0.0
$\left(\frac{\partial M_2}{\partial M_1}\right)_1$	0.0	0.0
$\left(\frac{\partial M_2}{\partial M_1}\right)_2$	0.0	0.0
$\left(\frac{\partial M_2}{\partial M_3}\right)_1$	$0.014458 \frac{\text{inlbv}}{\text{mv}}$	$0.018206 \frac{\text{inlbv}}{\text{mv}}$
$\left(\frac{\partial M_2}{\partial M_3}\right)_2$	0.0	0.0

	Positive	Negative
$\left(\frac{\partial M_3}{\partial M_1}\right)_1$	$0.022277 \frac{\text{inlbv}}{\text{mv}}$	$0.029935 \frac{\text{inlbv}}{\text{mv}}$
$\left(\frac{\partial M_3}{\partial M_1}\right)_2$	0.0	0.0
$\left(\frac{\partial M_3}{\partial M_2}\right)_1$	$-0.031554 \frac{\text{inlbv}}{\text{mv}}$	$-0.034948 \frac{\text{inlbv}}{\text{mv}}$
$\left(\frac{\partial M_3}{\partial M_2}\right)_2$	0.0	0.0

The orbiter MPS nozzle pressure data were integrated using Chrysler Corporation's SADSAC program to obtain the load distributions along the nozzle axis and the total nozzle loads. Integration of the pressure data (first integration) was performed according to the following equations (see Figure 8):

$$\frac{dC_N}{d(x/d_e)} = -\frac{d_e}{S_N}\int_0^{360} Cp\, d\,(R \sin \phi)$$

$$\frac{dC_m}{d(x/d_e)} = -\frac{d_e}{S_N}\int_0^{360} C_p \left(\frac{X}{d_e} - \frac{X_G}{d_e}\right) d\,(R \sin \phi)$$

$$\frac{dC_Y}{d(x/d_e)} = \frac{d_e}{S_N}\int_0^{360} C_p d\,(R \cos \phi)$$

$$\frac{dC_N}{d(x/d_e)} = \frac{d_e}{S_N}\int_0^{360} C_p \left(\frac{X}{d_e} - \frac{X_G}{d_e}\right) d\,(R \cos \phi)$$

where:

	Full Scale	Model Scale
S_N	49.4 ft^2	.01783 ft^2
d_e	90.73 in.	1.7238 in.
X_G	158 in.	3.002 in.

These integrations were performed on the curve fits of C_p vs. PHI displayed on plot pages 73-144. The resultant local loads coefficients are plotted against x/d_e on plot pages 289-384.

The integrations for total nozzle C_N, C_m, C_Y, and C_n (second integration) were performed according to the following equations:

$$C_N = \int_0^{1.0} \frac{dC_N}{d(x/d_e)} \, d(x/d_e)$$

$$C_m = \int_0^{1.0} \frac{dC_m}{d(x/d_e)} \, d(x/d_e)$$

$$C_Y = \int_0^{1.0} \frac{dC_Y}{d(x/d_e)} \, d(x/d_e)$$

$$C_n = \int_0^{1.0} \frac{dC_n}{d(x/d_e)} \, d(x/d_e)$$

The load distributions were extended to the limits of integration by assuming zero values for the local load coefficients at both limits. These added end points were then included in the curve fit used for the second integration. The load distribution plots do not include the integration limits and therefore the plot fairings will not be the same as the curve fits used for integration.

TABLE I

TEST : CALSPAN T14-053

DATE : 22 June '73

TEST CONDITIONS

MACH NUMBER	REYNOLDS NUMBER (per unit length)	DYNAMIC PRESSURE (pounds/sq. inch)	STAGNATION TEMPERATURE (degrees Fahrenheit)
.9	2.75×10^6	480	135
1.2	2.25×10^6	440	140

BALANCE UTILIZED: 2.5 INCH TASK MK III

	CAPACITY:	ACCURACY:	COEFFICIENT TOLERANCE:
NF	1400 lbs	.5%	
YF	700 lbs	.5%	
AF	280 lbs	.5%	
NA	1400 lbs	.5%	
YA	700 lbs	.5%	
RM	2000 in-lbs	.5%	

COMMENTS:

TABLE II

DATASET COLLATION SUMMARY

TOP NOZZLE M = 0.9

Φ_{RAY} OF FIXED NOZZLE ~ DEGREES	DISTANCE FORWARD OF NOZZLE EXIT											
	X/D = .058		X/D = .232		X/D = .406		X/D = .580		X/D = .753		X/D = .928	
0	0	1	30	12	60	11	90	10	120	9	150	8
	28	26	36	35	44	47	54	52	63	66	73	71
	29	27	37	38	45	46	55	53	64	65	74	72
30	30	1	60	12	90	11	120	10	150	9	0	2
	36	35	44	47	54	52	63	66	73	71	28	26
	37	38	45	46	55	53	64	65	74	72	29	27
60	60	1	90	12	120	11	150	10	0	3	30	2
	44	47	54	52	63	66	73	71	28	26	36	35
	45	46	55	53	64	65	74	72	29	27	37	38
90	90	1	120	12	150	11	0	4	30	3	60	2
	54	52	63	66	73	71	28	26	36	35	44	47
	55	53	64	65	74	72	29	27	37	38	45	46
120	120	1	150	12	0	5	30	4	60	3	90	2
	63	66	73	71	28	26	36	35	44	46	54	52
	64	65	74	72	29	27	37	38	45	47	55	53
150	150	1	0	6	30	5	60	4	90	3	120	2
	73	71	28	26	36	35	44	47	54	52	63	66
	74	72	29	27	37	38	45	46	55	53	64	65
180	0	7	30	6	60	5	90	4	120	3	150	2
	28	26	36	35	44	47	54	52	63	66	73	71
	29	27	37	38	45	46	55	53	64	65	74	72
210	30	7	60	6	90	5	120	4	150	3	0	8
	36	35	44	47	54	52	63	66	73	71	28	26
	37	38	45	46	55	53	64	65	74	72	29	27
240	60	7	90	6	120	5	150	4	0	9	30	8
	44	47	54	52	63	66	73	71	28	26	36	35
	45	46	55	53	64	65	76	72	29	27	37	38
270	90	7	120	6	150	5	0	10	30	9	60	8
	54	52	63	66	73	71	28	26	36	35	44	47
	55	53	64	65	74	72	29	27	37	38	45	46
300	120	7	150	6	0	11	30	10	60	9	90	8
	63	66	73	71	28	26	36	35	44	47	54	52
	64	65	74	72	29	27	37	38	45	46	55	53
330	150	7	0	12	30	11	60	10	90	9	120	8
	73	71	28	26	36	35	44	47	54	52	63	66
	74	72	29	27	37	38	45	46	55	53	64	65

MPSRA*	Tap No.
Run No. for RUFA03	Run No. for RUFA01
Run No. for RUFA04	Run No for RUFA02

* MPS NOZZLE ROTATION ANGLE

REPRODUCIBILITY OF THE
ORIGINAL PAGE IS POOR

TABLE II (Continued)

BOTTOM LEFT NOZZLE M: 0.9

	DISTANCE FORWARD OF NOZZLE EXIT											
Φ_{RAY} OF FIXED NOZZLE ~ DEGREES	X/D=.058		X/D=.232		X/D=.406		X/D=.580		X/D=.753		X/D=.928	
0	0 28 29	13 26 27	30 36 37	24 35 38	60 44 45	23 47 46	90 54 55	22 52 53	120 63 64	21 66 65	150 73 74	14 71 72
30	30 36 37	13 35 38	60 44 45	24 47 46	90 54 55	23 52 53	120 63 64	22 66 65	150 73 74	21 71 72	0 28 29	14 26 27
60	60 44 45	13 47 46	90 54 55	24 52 53	120 63 64	23 66 65	150 73 74	22 71 72	0 28 29	15 26 27	30 36 37	14 35 38
90	90 54 55	13 52 53	120 63 64	24 66 65	150 73 74	23 71 72	0 28 29	16 26 27	30 36 37	15 35 38	60 44 45	14 47 46
120	120 63 64	13 66 65	150 73 74	24 71 72	0 28 29	17 26 27	30 36 37	16 35 38	60 44 45	15 46 47	90 54 55	14 52 53
150	150 73 74	13 71 72	0 28 29	18 26 27	30 36 37	17 35 38	60 44 45	16 47 46	90 54 55	15 52 53	120 63 64	14 66 65
180	0 28 29	19 26 27	30 36 37	18 35 38	60 44 45	17 47 46	90 54 55	16 52 53	120 63 64	15 66 65	150 73 74	14 71 72
210	30 36 37	19 35 38	60 44 45	18 47 46	90 54 55	17 52 53	120 63 64	16 66 65	150 73 74	15 71 72	0 28 29	20 26 27
240	60 44 45	19 47 46	90 54 55	18 52 53	120 63 64	17 66 65	150 73 76	16 71 72	0 28 29	21 26 27	30 36 37	20 35 38
270	90 54 55	19 52 53	120 63 64	18 66 65	150 73 74	17 71 72	0 28 29	22 26 27	30 36 37	21 35 38	60 44 45	20 47 46
300	120 63 64	19 66 65	150 73 74	18 71 72	0 28 29	23 26 27	30 36 37	22 35 38	60 44 45	21 47 46	90 54 55	20 52 53
330	150 73 74	19 71 72	0 28 29	24 26 27	30 36 37	23 35 38	60 44 45	22 47 46	90 54 55	21 52 53	120 63 64	20 66 65

MPSRA	Tap No.
Run No. for RUFB03	Run No. for RUFB01
Run No. for RUFB04	Run No. for RUFB02

TABLE II (Continued)

BOTTOM RIGHT NOZZLE M = 0.9

Φ_{RAY} OF FIXED NOZZLE ~ DEGREES	DISTANCE FORWARD OF NOZZLE EXIT					
	X/D = .058	X/D = .232	X/D = .406	X/D = .580	X/D = .753	X/D = .928
0	0 25 28 26 29 27	30 36 36 35 37 38	60 35 44 47 45 46	90 34 54 52 55 53	120 33 63 66 64 65	150 32 73 71 74 72
30	30 25 36 35 37 38	60 36 44 47 45 46	90 35 54 52 55 53	120 34 63 66 64 65	150 33 73 71 74 72	0 26 28 26 29 27
60	60 25 44 47 45 46	90 36 54 52 55 53	120 35 63 66 64 65	150 34 73 71 74 72	0 27 28 26 29 27	30 26 36 35 37 38
90	90 25 54 52 55 53	120 36 63 66 64 65	150 35 73 71 74 72	0 28 28 26 29 27	30 27 36 35 37 38	60 26 44 47 45 46
120	120 25 63 66 64 65	150 36 73 71 74 72	0 29 28 26 29 27	30 28 36 35 37 38	60 27 44 46 45 47	90 26 54 52 55 53
150	150 25 73 71 74 72	0 30 28 26 27 27	30 29 36 35 37 38	60 28 44 47 45 46	90 27 54 52 55 53	120 26 63 66 64 65
180	0 31 28 26 29 27	30 30 36 35 37 38	60 29 44 47 45 46	90 28 54 52 55 53	120 27 63 66 64 65	150 26 73 71 74 72
210	30 31 36 35 37 38	60 30 44 47 45 46	90 29 54 52 55 53	120 28 63 66 64 65	150 27 73 71 74 72	0 32 28 26 29 27
240	60 31 44 47 45 46	90 30 54 52 55 53	120 29 63 66 64 65	150 28 73 71 76 72	0 33 28 26 29 27	30 32 36 35 37 38
270	90 31 54 52 55 53	120 30 63 66 64 65	150 29 73 71 74 72	0 34 28 26 29 27	30 33 36 35 37 38	60 32 44 47 45 46
300	120 31 63 66 64 65	150 30 73 71 74 72	0 35 28 26 29 27	30 34 36 35 37 38	60 33 44 47 45 46	90 32 54 52 55 53
330	150 31 73 71 74 72	0 36 28 26 29 27	30 35 36 35 37 38	60 34 44 47 45 46	90 33 54 52 55 53	120 32 63 66 64 65

MPSRA	Tap No.
Run No. for RUFC03	Run No. for RUFC01
Run No. for RUFC04	Run No. for RUFC02

TABLE II (Continued)

TOP NOZZLE $M = 1.2$

	DISTANCE FORWARD OF NOZZLE EXIT											
Φ_{RAY} OF FIXED NOZZLE ~ DEGREES	X/D=.058		X/D=.232		X/D=.406		X/D=.580		X/D=.753		X/D=.928	
0	0 24 25	1 22 23	30 34 33	12 30 31	60 42 43	11 40 41	90 50 51	10 48 49	120 59 60	9 62 61	150 77 78	8 75 76
30	30 34 33	1 30 31	60 42 43	12 40 41	90 50 51	11 48 49	120 59 60	10 62 61	150 77 78	9 75 76	0 24 25	2 22 23
60	60 42 43	1 40 41	90 50 51	12 48 49	120 59 60	11 62 61	150 77 78	10 75 76	0 24 25	3 22 23	30 34 33	2 30 31
90	90 50 51	1 48 49	120 59 60	12 62 61	150 77 78	11 75 76	0 24 25	4 22 23	30 34 33	3 30 31	60 42 43	2 40 41
120	120 59 60	1 62 61	150 77 78	12 75 76	0 24 25	5 22 23	30 34 33	4 30 31	60 42 43	3 40 41	90 50 51	2 48 49
150	150 77 78	1 75 76	0 24 25	6 22 23	30 34 33	5 30 31	60 42 43	4 40 41	90 50 51	3 48 49	120 59 60	2 62 61
180	0 24 25	7 22 23	30 34 33	6 30 31	60 42 43	5 40 41	90 50 51	4 48 49	120 59 60	3 62 61	150 77 78	2 75 76
210	30 34 33	7 30 31	60 42 43	6 40 41	90 50 51	5 48 49	120 59 60	4 62 61	150 77 78	3 75 76	0 24 25	8 22 23
240	60 42 43	7 40 41	90 50 51	6 48 49	120 59 60	5 62 61	150 77 78	4 75 76	0 24 25	9 22 23	30 34 33	8 30 31
270	90 50 51	7 48 49	120 59 60	6 62 61	150 77 75	5 75 76	0 24 25	10 22 23	30 34 33	9 30 31	60 42 43	8 40 41
300	120 59 60	7 62 61	150 77 78	6 75 76	0 24 25	11 22 23	30 34 33	10 30 31	60 42 43	9 40 41	90 50 51	8 48 49
330	150 77 78	7 75 76	0 24 25	12 22 23	30 34 33	11 30 31	60 42 43	10 40 41	90 50 51	9 48 49	120 59 60	8 62 61

MPSKA	Top No.
Run No for RUFA07	Run No for RUFA05
Run No for RUFA06	Run No for RUFA06

TABLE II (Continued)

BOTTOM LEFT NOZZLE M=1.2

		DISTANCE FORWARD OF NOZZLE EXIT											
		X/D=.058		X/D=.232		X/D=.406		X/D=.580		X/D=.753		X/D=.929	
φ_RAY OF FIXED NOZZLE ~ DEGREES	0	0	13	30	24	60	23	90	22	120	21	150	20
		24	22	34	30	42	40	50	48	59	62	77	75
		25	23	33	31	43	41	51	49	60	61	78	76
	30	30	13	60	24	90	23	120	22	150	21	0	14
		34	30	42	40	50	48	59	62	77	75	24	22
		33	31	43	41	51	49	60	61	78	76	25	23
	60	60	13	90	24	120	23	150	22	0	15	30	14
		42	40	50	48	59	62	77	75	24	22	34	30
		43	41	51	49	60	61	78	76	25	23	33	31
	90	90	13	120	24	150	23	0	16	30	15	60	14
		50	48	59	62	77	75	24	22	34	30	42	40
		51	49	60	61	78	76	25	23	33	31	43	41
	120	120	13	150	24	0	17	30	16	60	15	90	14
		59	62	77	75	24	22	34	30	42	40	50	48
		60	61	78	76	25	23	32	31	43	41	51	49
	150	150	13	0	18	30	17	60	16	90	15	120	14
		77	75	24	22	34	30	42	40	50	48	59	62
		78	76	25	23	33	31	43	41	51	49	60	61
	180	0	19	30	18	60	17	70	16	120	15	150	14
		24	22	34	30	42	40	50	48	59	62	77	75
		25	23	33	31	43	41	51	49	60	61	78	76
	210	30	19	60	18	90	17	120	16	150	15	0	20
		34	30	42	40	50	48	59	62	71	75	24	22
		33	31	43	41	51	49	60	61	78	76	25	23
	240	60	19	90	18	120	17	150	16	0	21	30	20
		42	40	50	48	59	62	77	75	24	22	34	30
		43	41	51	49	60	61	78	76	25	23	33	31
	270	90	19	120	18	150	17	0	22	30	21	60	20
		50	48	59	62	77	75	24	22	34	30	42	40
		51	49	60	61	78	76	25	23	33	31	43	41
	300	120	19	150	18	0	23	30	22	60	21	90	20
		59	62	77	75	24	22	34	30	42	40	50	48
		60	61	78	76	25	23	33	31	43	41	51	49
	330	150	19	0	24	30	23	60	22	90	21	120	20
		77	75	24	22	34	30	42	40	50	48	59	62
		78	76	25	23	33	31	43	41	51	46	60	61

MPSRA	Tap No.
Run No. for RUFB07	Run No. for RUFB05
Run No for RUFB08	Run No. for RUFB06

ORIGINAL PAGE IS POOR

TABLE II (Continued)

BOTTOM RIGHT NOZZLE $M=1.2$

ϕ_{RAY} OF FIXED NOZZLE ~ DEGREES	DISTANCE FORWARD OF NOZZLE EXIT											
	X/D=.058		X/D=.232		X/D=.406		X/D=.580		X/D=.753		X/D=.928	
0	0 24 25	25 22 23	30 34 33	36 30 31	60 42 43	35 40 41	90 50 51	34 48 49	120 59 60	33 62 61	150 77 78	32 75 76
30	30 34 33	25 30 31	60 42 43	36 40 41	90 50 51	35 48 49	120 59 60	34 62 61	150 77 78	33 75 76	0 24 25	26 22 23
60	60 42 43	15 40 41	90 50 51	36 48 49	120 59 60	35 62 61	150 77 78	34 75 76	0 24 25	27 22 23	30 34 33	26 30 31
90	90 50 51	25 48 49	120 59 60	36 62 61	150 77 78	35 75 76	0 24 25	28 22 23	30 34 33	27 30 31	60 42 43	26 40 41
120	120 57 60	25 62 61	150 77 78	36 75 76	0 24 25	29 22 23	30 34 32	28 30 31	60 42 43	27 40 41	90 50 51	26 48 49
150	150 77 78	25 75 76	0 24 25	30 22 23	30 34 33	29 30 31	60 42 43	28 40 41	90 50 51	27 48 49	120 59 60	26 62 61
180	0 24 25	31 22 23	30 34 33	30 30 31	60 42 43	29 40 41	90 50 51	28 48 49	120 59 60	27 62 61	150 77 78	26 75 76
210	30 34 33	31 30 31	60 42 43	30 40 41	90 50 51	27 48 49	120 59 60	28 62 61	150 77 78	27 75 76	0 24 25	32 22 23
240	60 42 43	31 40 41	90 50 51	30 48 49	120 59 60	29 62 61	150 77 78	28 75 76	0 24 25	33 22 23	30 34 33	32 30 31
270	90 50 51	31 48 49	120 59 60	30 62 61	150 77 78	29 75 76	0 24 25	34 22 23	30 34 33	33 30 31	60 42 43	32 40 41
300	120 59 60	31 62 61	150 77 78	30 75 76	0 24 25	35 22 23	30 34 33	34 30 31	60 42 43	33 40 41	90 50 51	32 48 49
330	150 77 78	31 75 76	0 24 25	36 22 23	30 34 33	35 30 31	60 42 43	34 40 41	70 50 51	33 48 46	120 59 60	32 62 61

MPSRA	Tap No.
Run No for RUFC07	Run No. for RUFC05
Run No. for RUFC08	Run No for RUFC06

TABLE II (Continued)

TEST : Calspan T14 -053

DATA SET/RUN NUMBER COLLATION SUMMARY

DATE : 22 June, 1973

DATA SET IDENTIFIER	CONFIGURATION	SCHD.		PARAMETERS/VALUES										NO. OF RUNS	MACH NUMBERS			
		α	β	MPSR	POWER	OPR	SRMPR	GP1	GY1	GY2	GY3	i			0.9	1.2		
RUF015	$\emptyset_2 T_1 S_1$	A	O	0°	OFF	–	–	+11°	-9°	-9°	-9°	0°			15			
018		A	O		OFF	–	–									18		
019		A	O		OFF	–	–								19			
020		O	D		OFF	–	–								20			
022		C	O		OFF	–	–									22		
023		O	B		OFF	–	–									23		
024		C	O		ON	36.20	2.33									24		
025		O	D		ON	36.20	2.33									25		
026		C	O		OFF	–	–								26			
027		O	D		OFF	–	–								27			
028		C	O		ON	28.31	2.02								28			
029		O	D		ON	28.31	2.02								29			
030		C	O	30°	OFF	–	–									30		
031		O	D		OFF	–	–									31		
033		O	D		ON	36.20	2.33									33		
034		C	O		ON	36.20	2.33									34		
035		C	O		OFF	–	–								35			
036		C	O		ON	28.31	2.02								36			

TEST RUN NUMBERS

1 7 13 19 25 31 37 43 49 55 61 67 75 76

*

Coefficients

IDVAR (1) IDVAR (2) NDV

α OR β SCHEDULES

αA: -8, -6, -4, -2, 0, 2, 4, 6, 8

αC: -8, -4, 0, 4, 6

βB: -8, -6, -4, -2, 0, 2, 4, 6, 8

βD: -6, -3, 0, 3, 6

*See Description at end of this table.

TABLE II (Continued)

TEST: *Calspan T14-053*

DATA SET/RUN NUMBER COLLATION SUMMARY

DATE: 22 June, 1973

DATA SET IDENTIFIER	CONFIGURATION	SCHD.		PARAMETERS/VALUES										NO. OF RUNS	MACH NUMBERS				
		α	β	MPSRA	POWER	ØPR	SZMPR	GPI	GY1	GY2	GY3	ι			0.9	1.2			
RUF037	$\O_2 T_1 S_1$	O	D	30°	ØN	28.31	2.02	+11°	-9°	-9°	-9°	0°			37				
038		O	D	30°	ØFF	—	—								38				
040		C	O	60°	ØFF	—	—									40			
041		O	D		ØFF	—	—									41			
042		C	O		ØN	36.20	2.33									42			
043		O	D		ØN	36.20	2.33									43			
044		C	O		ØN	28.31	2.02								44				
045		O	D		ØN	28.31	2.02								45				
046		O	D		ØFF	—	—								46				
047		C	O		ØFF	—	—								47				
048		C	O	90°	ØFF	—	—									48			
049		O	D		ØFF	—	—									49			
050		C	O		ØN	36.20	2.33									50			
051		O	D		ØN	36.20	2.33									51			
052		C	O		ØFF	—	—								52				
053		O	D		ØFF	—	—								53				
054		C	O		ØN	28.31	2.02								54				
055		O	D		ØN	28.31	2.02								55				

TEST RUN NUMBERS

1 7 13 19 25 31 37 43 49 55 61 67 75 76

Coefficients

IDVAR (1) IDVAR (2) NDV

α OR β SCHEDULES

αA: -8, -6, -4, -2, 0, 2, 4, 6, 8

αC: -8, -4, 0, 4, 6

βB: -8, -6, -4, -2, 0, 2, 4, 6, 8

βD: -6, -3, 0, 3, 6

TABLE II (Continued)

TEST : Calspan T14-053

DATA SET/RUN NUMBER COLLATION SUMMARY

DATE : 22 June, 1973

DATA SET IDENTIFIER	CONFIGURATION	SCHD.		PARAMETERS/VALUES										NO. OF RUNS	MACH NUMBERS			
		α	β	MPSRA	POWER	ØPR	SRMPR	GP1	GY1	GP2	GY2	GP3	GY3		0.9	1.2		
RUF059	$Ø_2T_1S_1$	C	O	120°	ØN	36.20	2.33	+11°	-9°	0°	-9°	0°	-9°			59		
060		O	D		ØN	36.20	2.33									60		
061		C	O		ØFF	–	–									61		
062		O	D		ØFF	–	–									62		
063		C	O		ØN	28.31	2.02								63			
064		O	D		ØN	28.31	2.02								64			
065		O	D		ØFF	–	–								65			
066		C	O		ØFF	–	–								66			
071		C	O	150°	ØFF	–	–								71			
072		O	D		ØFF	–	–								72			
073		C	O		ØN	28.31	2.02								73			
074		O	D		ØN	28.31	2.02								74			
075		C	O		ØFF	–	–									75		
076		O	D		ØFF	–	–									76		
077		C	O		ØN	36.20	2.33									77		
078		O	D		ØN	36.20	2.33									78		
081	$Ø_1T_1S_1$	C	O	0°	ØFF	–	–	0°	0°	0°	-3.5°	0°	+3.5°			81		
082	$Ø_1T_1S_1$	O	D	0°	ØFF	–	–	0°	0°	0°	-3.5°	0°	+3.5°			82	*	

1 7 13 19 25 31 37 43 49 55 61 67 75 76

Coefficients

IDVAR (1) IDVAR (2) NDV

α OR β SCHEDULES

αA: -8, -6, -4, -2, 0, 2, 4, 6, 8

αC: -8, -4, 0, 4, 6

βB: -8, -6, -4, -2, 0, 2, 4, 6, 8

βD: -6, -3, 0, 3, 6

* Grounding from β = +3° to +6°
(See Repeat runs 105-108)

TABLE II (Continued)

TEST: Calspan T14-053		DATA SET/RUN NUMBER COLLATION SUMMARY													DATE: 22 June, 1973				
DATA SET IDENTIFIER	CONFIGURATION	SCHD.		PARAMETERS/VALUES											NO. OF RUNS	MACH NUMBERS				TEST RUN NUMBERS
		α	β	MPSRA	POWER	ØPR	SRMPR	RUDDER	GP1	GY1	GY2	GP3	GY3		0.9	1.2			
RUF083	O.T.S.	C	O	0°	ON	31.20	2.33	0°	0°	0°	-3.5°	0°	+3.5°			83			
084		O	D		ON	36.20	2.33									84	*		
085		C	O		ON	95.8	2.33									85			
086		C	O		ON	66.7	2.33									86			
087		C	O		ON	36.20	3.17									87			
088		C	O		OFF	—	—								88				
089		O	D		OFF	—	—								89				
090		C	O		ON	28.31	2.02								90				
091		O	D		ON	28.31	2.02								91				
092		C	O		ON	70.5	2.02								92				
093		C	O		ON	48.6	2.02								93				
094		C	O		ON	28.31	2.40								94				
095		C	O		OFF	—	—	+10°								95			
096		O	D		OFF	—	—									96			
097		C	O		ON	36.20	2.33									97			
098		O	D		ON	36.20	2.33									98			
099		O	D		ON	97.6	2.33									99			
100		C	O		OFF	—	—								100				

1 7 13 19 25 31 37 43 49 55 61 67 75 76

Coefficients

IDVAR (1) IDVAR (2) NDV

α OR β SCHEDULES

αA: -8, -6, -4, -2, 0, 2, 4, 6, 8

αC: -8, -4, 0, 4, 6

βB: -8, -6, -4, -2, 0, 2, 4, 6, 8

βD: -6, -3, 0, 3, 6

* Grounding from β = +3° to +6°
(See Repeat runs 105-108)

TABLE II (Continued)

TEST: Calspan T14-053

DATA SET/RUN NUMBER COLLATION SUMMARY

DATE: 22 June, 1973

DATA SET IDENTIFIER	CONFIGURATION	SCHD.		PARAMETERS/VALUES										NO. OF RUNS	MACH NUMBERS			
		α	β	MPSRA	POWER	ØPR	SRMPR	RUDDER	GP1	GY1	GY2	GP3	GY3		0.9	1.2		
RUF101	Ø1 T1 S1	O	D	0°	ØFF	–	–	+10°	0°	0°	-3.5°	0°	+3.5°		101			
102		C	C		ØN	28.31	2.02								102			
103		O	D		ØN	28.31	2.02								103			
104		O	D		ØN	69.3	2.02								104			
105		O	D		ØN	36.20	2.33	0°								105		
106		O	D		ØFF	–	–									106		
107		O	D		ØFF	–	–								107			
108		O	D		ØN	28.31	2.02								108			

TEST RUN NUMBERS

1 7 13 19 25 31 37 43 49 55 61 67 75 76

Coefficients

IDVAR (1) IDVAR (2) NDV

α OR β SCHEDULES

αA: -8, -6, -4, -2, 0, 2, 4, 6, 8

αC: -8, -4, 0, 4, 6

βB: -8, -6, -4, -2, 0, 2, 4, 6, 8

βD: -6, -3, 0, 3, 6

TABLE II (Continued)

TEST: Calspan T14-053

DATA SET/RUN NUMBER COLLATION SUMMARY

DATE: 22 June, 1973

DATA SET IDENTIFIER	CONFIGURATION	ID. α	ID. β	NPSRA	POWER	OPR.	SPR	GP1	GP2	GY2	GP3	GY3	GP4	GP5	MACH NUMBERS	0.9	1.2	
RUF109	O, T, S,	C	O	0°	ON	36.20	2.33	+11°	+11°	-3.5°	+11°	+3.5°	+7°	+7°			109	
110		O	D		ON	36.20	2.33										110	
111		C	O		ON	28.31	2.02									111		
112		O	D		ON	28.31	2.02									112		
113		C	O		ON	36.20	2.33	-11°	-8°		-8°		-7°	-7°			113	
114		O	D		ON	36.20	2.33										114	
115		C	O		ON	28.31	2.02									115		
116		O	D		ON	28.31	2.02									116		
117	Hoses Off	A	O		OFF	–	–	0°	0°		0°		0°	0°			117	
118		O	B		OFF	–	–										118	
119		A	O		OFF	–	–									119		
120		C	B		OFF	–	–									120		

TEST RUN NUMBERS

1 7 13 19 25 31 37 43 49 55 61 67 75 76

Coefficients IDVAR (1) IDVAR (2) NDV

α OR β SCHEDULES

αA: -8, -6, -4, -2, 0, 2, 4, 6, 8

αC: -8, -4, 0, 4, 6

βB: -8, -6, -4, -2, 0, 2, 4, 6, 8

βD: -6, -3, 0, 3, 6

TABLE II (Continued)

DATASET COEFFICIENTS

TYPE OF DATA	DATASETS	COEFFICIENTS
LAUNCH VEHICLE FORCE DATA		
Source data	RUF015-120	CN, CLMF, CLM, CAF, CA, CYN, CBL
Power-off longitudinal coefficients and increments due to power	SUF073-115* (pitch runs)	DCAF, DCAB, DCN, DCLMF, CAF, CAB, CN, CLMF
Power-off rudder effectiveness derivatives and increments due to power	PUF097, 102	DDCAFR, DDCNDR, DDCMFR, DCAFDR, DCN/DR, DCMFDR
	PUF098, 103	DDCYDR, DDCBLR, DDCYNR, DCY/DR, DCBLDR, DCYNDR
Power-off alpha derivatives, a.c. position in pitch, and increments due to power	QUF073-115* (pitch runs)	DCN/A, DCMF/A, DXAC/L, CN/A, CLMF/A, XAC/L
Power-off beta derivatives, a.c. position in yaw, and increments due to power	QUF074-116* (yaw runs)	DCY/B, DCBL/B DCYN/B, DYAC/L, CY/B, CBL/B, CYN/B, XYAC/L
HINGE MOMENT DATA		
Wing root loads and rudder and elevon hinge moments	AUF015-120	CNW, CHW, CBW, CHR, CHEI, CHEO

*NOTE: Power effect dataset numbers are the same as the power-on run numbers of the source data.

TABLE II (Concluded)

DATASET COEFFICIENTS

TYPE OF DATA	DATASETS	COEFFICIENTS
MPS NOZZLE DATA		
Source pressure data	RUFA01-08	CP (upper nozzle)
	RUFB01-08	CP (lower left hand nozzle)
	RUFC01-08	CP (lower right hand nozzle)
Normal net pressure coefficient, upper surface-lower surface	NUFA01-08	DELCP
	NUFB01-08	DELCP
	NURC01-08	DELCP
Side net pressure coefficient, right side-left side	SUFA01-08	DELCP
	SUFB01-08	DELCP
	SUFC01- 08	DELCP
Integrated local loads coefficients (axial distributions)	AUFA01-08	DCN/DX, DCNMDX, DCY/DX, DCYNDX
	AUFB01-08	DCN/DX, DCNMDX, DCY/DX, DCYNDX
	AUFC01-08	DCN/DX, DCNMDX, DCY/DX, DCYNDX
Integrated total loads coefficients	DUFA01-08	CN, CY, CFR, THETAF, CLM, CYN, CMR,THETAM
	DUFB01-08	CN, CY, CFR, THETAF, CLM, CYN, CMR,THETAM
	DUFC01-08	CN, CY, CFR, THETAF, CLM, CYN, CMR,THETAM
WING PRESSURE DATA		
Lower surface	LUF015, 18-20, 73, 77, 81-120	CP
Upper surface	UUF015, 18-20, 73, 77, 81-120	CP

TABLE III.
MODEL COMPONENT DESCRIPTIONS

MODEL COMPONENT: B10 - Body

GENERAL DESCRIPTION: Fuselage, 2A Configuration, Lightweight Orbiter per Rockwell Lines VL70-000089 "B".

Scale Model = 0.019

DRAWING NUMBER:
VL70-000089 "B"
VL70-000092, 93, 94 "A"
SS-A-00092

DIMENSIONS:	**FULL-SCALE**	**MODEL SCALE**
Length ~ in.	1328.3	25.238
Max. Width ~ in. (@X_o = 1528.3)	265.0	5.035
Max. Depth ~ in. (@X_o = 1480.52)	248.0	4.712
Fineness Ratio	5.012	5.012
Area ~ Ft.^{2}		
Max. Cross-Sectional	456.4	0.1648
Planform	-	-
Wetted	-	-
Base	-	-

TABLE III. (Continued)

MODEL COMPONENT: C5 Orbiter Canopy

GENERAL DESCRIPTION: Orbiter Canopy for Light Weight Orbiter Configuration

Model Scale = 0.019

DRAWING NUMBER: VL-70-000092

DIMENSIONS:

	FULL-SCALE	MODEL SCALE
STA. FWD. Bulkhead, in	391.0	7.429
STA. T.E., in	560.0	10.640
Canopy/Body Intersection, IN	391.0	7.429

TABLE III. (Continued)

MODEL COMPONENT: D7 - Manipulator Housing

GENERAL DESCRIPTION: 2A Configuration Per Rockwell Lines VL70-000093

Scale Model = 0.019

DRAWING NUMBER: VL70-000093; SS-A-00092

DIMENSIONS:	**FULL-SCALE**	**MODEL SCALE**
Length ~ in.	881.0	16.739
Max. Width ~ in.	51.0	0.969
Max. Depth ~ in.	23.0	0.437
Fineness Ratio	-	-
Area		
Max. Cross-Sectional	-	-
Planform	-	-
Wetted	-	-
Base	-	-

Location at:

℄ Fuselage BP = 0.0
WP = 500.0 INFS
$X_0$426.0 to $X_0$1307.0 INFS

REPRODUCIBILITY OF THE
ORIGINAL PAGE IS POOR

TABLE III. (Continued)

MODEL COMPONENT: WING-W 87 Lightweight Orbiter

GENERAL DESCRIPTION: Orbiter Configuration per Rockwell Lines VL70-000093

NOTE: (Dihedral angle is defined at the lower surface of the wing at the 75.33% element line projected into a plane perpendicular to the FRL.

Scale Model = 0.019

TEST NO.

DWG. NO. VL70-000093
SSA-A00091, 92

DIMENSIONS:	FULL-SCALE	MODEL SCALE
TOTAL DATA		
Area (Theo.) Ft^2		
Planform	2690.0	0.971
Span (Theo In.	936.682	17.797
Aspect Ratio	2.265	2.265
Rate of Taper	1.177	1.177
Taper Ratio	0.200	0.200
Dihedral Angle, degrees	3.500	3.500
Incidence Angle, degrees	3.000	3.000
Aerodynamic Twist, degrees	+3.000	+3.000
Sweep Back Angles, degrees		
Leading Edge	45.000	45.000
Trailing Edge	-10.24	-10.24
0.25 Element Line	35.209	35.209
Chords: ~ IN		
Root (Theo) B.P.0.0.	689.24	13.096
Tip, (Theo) B.P.	137.85	2.619
MAC	474.81	9.021
Fus. Sta. of .25 MAC	1136.89	21.601
W.P. of .25 MAC	299.20	5.685
B.L. of .25 MAC	182.13	3.460
EXPOSED DATA		
Area (Theo) Ft^2	1752.29	0.633
Span, (Theo) In. BP108	720.68	13.693
Aspect Ratio	2.058	2.058
Taper Ratio	0.2451	0.2451
Chords		
Root BP108	562.40	10.686
Tip 1.00 $\frac{b}{2}$	137.85	2.619
MAC	393.03	7.468
Fus. Sta. of .25 MAC	1185.31	22.521
W.P. of .25 MAC	300.20	5.704
B.L. of .25 MAC	251.76	4.783
Airfoil Section (Rockwell Mod NASA) XXXX-64		
t/c @Root $\frac{b}{2}$ = 0.425	0.10	0.10
t/c @Tip $\frac{b}{2}$ = 1.00	0.12	0.12
Data for (1) of (2) Sides		
Leading Edge Cuff Planform Area Ft^2	120.33	0.0434
Leading Edge Intersects Fus M. L. @ Sta	560.0	10.640
Leading Edge Intersects Wing @ Sta	1035.0	19.665

TABLE III. (Continued)

MODEL COMPONENT: E18 - Elevon

GENERAL DESCRIPTION: 2A Configuration Per W-87 Rockwell Lines VL70-000093

Data for (1) of (2) Sides

Scale Model = 0.019

DRAWING NUMBER: VL70-000093; SS-A-00092

DIMENSIONS:	FULL-SCALE	MODEL SCALE
Area ~ Ft^2	205.52	0.0742
Span (equivalent) ~ in.	353.34	6.713
Inb'd equivalent chord (B.P.115.0in),in	114.78	2.181
Outb'd equivalent chord (B.P.468.3in),in	55.00	1.045
Ratio movable surface chord/ total surface chord		
At Inb'd equiv. chord	0.208	0.208
At Outb'd equiv. chord	0.400	0.400
Sweep Back Angles, degrees		
Leading Edge	0.00	0.00
Tailing Edge	-10.24	-10.24
Hingeline (X_o=1387" F. S.)	0.00	0.00
Area Moment (Normal to hinge line) Ft^3 Product of Area Moment	1,548.07	0.01062

NOTE: The elevon panel consists of an InBD and OutBD segment. The split line dividing the segments is at B.P. 281 inches full scale (B.P. 5.339 inches Model Scale)

TABLE III. (Continued)

MODEL COMPONENT: VERTICAL - V5 (Light Wt. Orbiter Configuration)

GENERAL DESCRIPTION: Centerline Vertical Tail, Double Wedge Airfoil with Rounded Leading Edge

Model Scale = 0.019

DRAWING NUMBER: VL-70-000095; SS-A-00092

DIMENSIONS:	FULL-SCALE	MODEL SCALE
TOTAL DATA		
Area (Theo) Ft^2	413.25	0.1492
Planform	-	-
Span (Theo) In	315.72	5.999
Aspect Ratio	1.675	1.675
Rate of Taper	0.507	0.507
Taper Ratio	0.404	0.404
Sweep Back Angles, degrees		
Leading Edge	45.000	45.000
Trailing Edge	26.249	26.249
0.25 Element Line	41.130	41.130
Chords: Inches		
Root (Theo) WP	268.50	5.102
Tip (Theo) WP	108.47	2.061
MAC	199.91	3.798
Fus. Sta. of .25 MAC	1463.50	27.807
W. P. of .25 MAC	635.52	12.075
B. L. of .25 MAC	0.0	0.0
Airfoil Section		
Leading Wedge Angle ~ Deg	10.00	10.00
Trailing Wedge Angle ~ Deg	14.92	14.92
Leading Edge Radius, IN	2.00	0.038
Void Area ~ Ft^2	13.17	0.00475
Blanketed Area ~ Ft^2	12.67	0.00457

TABLE III. (Continued)

MODEL COMPONENT: R5 - Rudder

GENERAL DESCRIPTION: 2A Configuration per Rockwell Lines VL 70-000095.

Scale Model = 0.019

DRAWING NUMBER: VL70-000095 SS-A00091, 92

DIMENSIONS:	FULL-SCALE	MODEL SCALE
Area ~ Ft^2	106.38	0.0384
Span (equivalent) ~ IN	201.0	3.819
Inb'd equivalent chord, IN	91.585	1.740
Outb'd equivalent chord, IN	50.833	0.966
Ratio movable surface chord/ total surface chord		
At Inb'd equiv. chord	0.400	0.400
At Outb'd equiv. chord	0.400	0.400
Sweep Back Angles, degrees		
Leading Edge	34.83	34.83
Tailing Edge	26.25	26.25
Hingeline	34.83	34.83
Area Moment (Normal to hinge line) ~ Ft^3	526.13	0.00361

(Product of Area and Mean Chord)

TABLE III. (Continued)

MODEL COMPONENT: M_3 - OMS POD

GENERAL DESCRIPTION: 2A Lightweight Orbiter Configuration per Rockwell Lines VL70-000094"A"

Scale Model = 0.019

DRAWING NUMBER: VL70-000094 "A"; SS-A-00092

DIMENSIONS:	FULL-SCALE	MODEL SCALE
Length ~ in.	346.0	6.574
Max. Width ~ in. @ X_o 1450.0	108.0	2.052
Max. Depth ~ in. @ X_o 1500.0	113.8	2.162
Fineness Ratio	-	-
Area		
Max. Cross-Sectional	-	-
Planform	-	-
Wetted	-	-
Base	-	-

℄ of OMS POD
Z_o = 463.9 INFS: WP400 + 63.9 = 463.9 INFS
Y_o = 80.0 INFS
Length: X_o 1214.0 to X_o 1560.0 = 346.0 INFS

TABLE III. (Continued)

MODEL COMPONENT: N8 - OMS Nozzle

GENERAL DESCRIPTION: Basic OMS Nozzle of the 2A Configuration per Rockwell Lines VL70-008306 and VL70-000089 "B"

Scale Model = 0.019

DRAWING NO. VL70-008306, VL70-000089"B", SS-A00092

DIMENSIONS	FULL-SCALE	MODEL SCALE
MACH NO. --		
DIAMETER DEX ~ IN	50.00	0.950
DIAMETER DT ~ IN	N/A	N/A
DIAMETER DIN ~ IN	28.00	0.532
θN ~ DEGREES	N/A	N/A
AREA ~ Ft²		
MAX CROSS-SECTIONAL	13.635	0.00492

GIMBAL ORIGIN	X_o	Y_o	Z_o
Left NOZZLE ~ IN	1518	-88.0	492
Right NOZZLE ~ IN	1518	+88.0	492

NULL POSITION	PITCH	YAW
Left NOZZLE ~ Deg.	15°49'	-12°17'
Right NOZZLE ~ Deg.	15°49'	+12°17'

Intersection of Nozzle Exit Plane and Nozzle Centerline: ~ IN

X_o =	1576.7	[illegible]
Y_o =	± 99.[illegible]	± 1.886
Z_o =	507.[illegible]	9.638

REPRODUCIBILITY OF THE ORIGINAL PAGE IS POOR

TABLE III. (Continued)

MODEL COMPONENT: N9 Orbiter Nozzles

GENERAL DESCRIPTION: Orbiter Nozzles used for Cold Jet Plume Simulation at M = .9,1.25, 1.55,2.0,3.0 and 3.5. All Three Model Nozzles are Mounted to Ball Sockets which allow Gimbal Angles of ±11° Pitch and ±9° Yaw from NULL. Model Scale = 0.019

DRAWING NO. SS-A-00092; SS-A-00095

DIMENSIONS	FULL-SCALE	MODEL SCALE
MACH NO. .9 thru 3.5		
DIAMETER DEX ~ IN	90.73	1.7238
DIAMETER DT ~ IN	28.126	0.5344
DIAMETER DIN ~ IN	37.336	0.7094
ΘN ~ DEGREES	-	-
AREA ~ Ft²		
MAX CROSS-SECTIONAL (Exit)	44.896	0.0162

GIMBAL ORIGIN	X_o	Y_o	Z_o
UPPER NOZZLE ~ IN (F.S., M.S.)	1445.0, 27.455	0.0, 0.0	443.0, 8.
BOTTOM NOZZLE ~ IN (F.S., M.S.)	1467.9, 28.890	53.0, 1.007	342.6, 6.

NULL POSITION	PITCH	YAW
UPPER NOZZLE	16°	0°
BOTTOM NOZZLE	10°	3.5° (Out

TABLE III. (Continued)

MODEL COMPONENT: N_{10} Orbiter Nozzles

GENERAL DESCRIPTION: Orbiter Nozzles used for Cold Jet Plume Simulation at

M = .9, 1.25, 1.55, 2.0, 3.0, and 3.5.

The bottom nozzles gimbal ± 11° pitch ± 9° Yaw in Ball Sockets. The upper nozzle

is fixed at + 11° Pitch, -9° Yaw and has twelve (12) external static taps on

nozzle surface. Model Scale = 0.019

DRAWING NO. SS-A-00092; SS-A-00095

DIMENSIONS	FULL-SCALE	MODEL SCALE
MACH NO. .9 thru 3.5		
DIAMETER DEX ~ IN	90.73	1.7238
DIAMETER DT ~ IN	28.126	0.5344
DIAMETER DIN ~ IN	37.336	0.7094
θN ~ DEGREES	-	-
AREA ~ Ft²		
MAX CROSS-SECTIONAL (Exit per Nozzle)	44.896	0.0162

GIMBAL ORIGIN	X_o	Y_o	Z_o
UPPER NOZZLE ~ IN (F.S., M.S.)	1445.0, 27.455	0.0, 0.0	443.0, 8.417
BOTTOM NOZZLE ~ IN (F.S., M.S.)	1467.9, 27.890	53.0, 1.0007	342.6, 6.510

NULL POSITION	PITCH	YAW
UPPER NOZZLE	16°	0°
BOTTOM NOZZLE	10°	3.5° (OutBD)

TABLE III. (Continued)

MODEL COMPONENT: F4 Body Flap

GENERAL DESCRIPTION: Aft Body Flap Used on Light Weight Orbiter Configuration

Model Scale = 0.019

DRAWING NUMBER: VL-70-000094 "A", SS-A-00092

DIMENSIONS:	**FULL-SCALE**	**MODEL SCALE**
Length, in	84.70	1.609
Max. Width, in	265.00	5.035
Max. Depth	-	-
Fineness Ratio	-	-
Area, Ft^2		
Max. Cross-Sectional	-	-
Planform	142.64	0.05149
Wetted	-	-
Base	38.65	0.01395

TABLE III. (Continued)

COMPONENT: X_8 Transition Strips

DESCRIPTION: Transition grit strips used in AMES 9x7 wind tunnel. Microbeads were used to make grit strip. Microbead diameter equals 0.0065 inches.

Model Scale = 0.019

LOCATIONS: (Dimensions Model Scale)

SRM: 2 inches aft of nose (0.125" wide strip)

EOHT: 6 inches aft of nose (0.125" wide strip)

WING: 0.5 inches perpendicular to wing leading edge (0.125" wide strip)

VERTICAL TAIL: 0.25 inches perpendicular to tail leading edge (0.125" wide strip)

ORBITER BODY: 0.75 inches aft of nose (0.125" wide strip)

TABLE III. (Continued)

Model Component: Solid Rocket Motor (S_{10})

General Description: Booster solid rocket motor, body of revolution

Data for 1 of 2 sides

Model Scale = 0.019

Drawing Number: VL77-000039

Dimensions:	Full-Scale	Model Scale
Length (includes nozzle), in.	1741.0	33.080
Max width (diameter), in.	142.0	2.698
Max depth (aft shroud diameter), in.	192.0	3.648
Fineness ratio	9.0677	9.0677
Area ~ ft^2		
Max cross-sectional	201.062	0.0726
Planform		
Wetted		
Base		
WP of BSRM centerline, (X_T), in.	400.0	7.600
FS of BSRM nose, (X_T), in.	743.0	14.117

TABLE III. (Concluded)

MODEL COMPONENT: T10 External Tank

GENERAL DESCRIPTION: External Oxygen Hydrogen Tank

Configuration to which the Orbiter and the Two Solid Rocket Motors attach

Body of revolution

Model Scale = 0.019

DRAWING NUMBER: VL-70-000088 VL-78-000041

DIMENSIONS:	FULL-SCALE	MODEL SCALE
Length, IN (Nose @ $X_t = 309.0$)	1865.0	35.435
Max. Width (Dia.), IN	324.0	6.156
Max. Depth	-	-
Fineness Ratio	5.75617	5.75617
Area Ft^2		
Max. Cross-Sectional	572.56	0.2067
Planform	-	-
Wetted	-	-
Base	-	-
W.P. of Tank Centerline, (X_t) IN	400.0	7.600

TABLE IV.

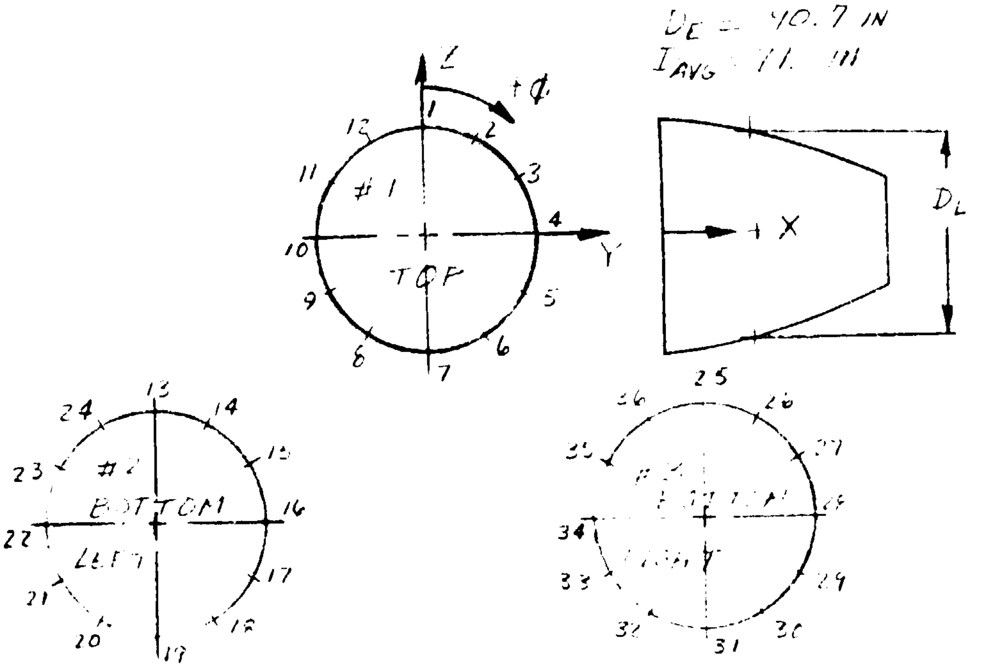
D_E = 40.7 IN
I_{AVG} = 11. IN
Z
+φ
Y
X
D_L
#1
TOP
1
2
3
4
5
6
7
8
9
10
11
12
#2
BOTTOM
LEFT
13
14
15
16
17
18
19
20
21
22
23
24
RIGHT
25
26
27
28
29
30
31
32
33
34
35
36

Ø	X/D_E	TAP NOS	D_L/D_{AVG}
0	.058	1, 13, 25	1.2817
30	.928	2, 14, 26	0.6789
60	.753	3, 15, 27	0.8592
90	.580	4, 16, 28	1.0141
120	.406	5, 17, 29	1.4179
150	.232	6, 18, 30	1.2324
180	.058	7, 19, 31	1.2817
210	.928	8, 20, 32	0.6789
240	.753	9, 21, 33	0.8592
270	.580	10, 22, 34	1.0141
300	.406	11, 23, 35	1.1479
330	.232	12, 24, 36	1.2324

TAP LOCATIONS - ORBITER NOZZLES

TABLE V.
DIMENSIONAL DESCRIPTION
ORBITER NOZZLES

x/r*	r/r*
	EXIT PLANE
0	3.2257
.1097	3.2107
.3365	3.1793
.5879	3.1430
.8660	3.1010
1.0101	3.0786
1.3342	3.0258
1.6437	2.9727
1.8428	2.9368
2.0992	2.8892
2.2421	2.8615
2.4012	2.8301
2.5782	2.7942
2.7743	2.7530
2.9918	2.7058
3.1995	2.6591
3.4008	2.6123
3.5307	2.5808
3.6999	2.5393
3.9169	2.4828
4.0378	2.4525
4.1718	2.4165
4.3215	2.3754
4.4862	2.3286
4.6980	2.2665
4.8990	2.2055
5.0303	2.1639
5.1969	2.1104
5.3945	2.0442
5.6396	1.9585
5.7848	1.9053
5.9188	1.8552
6.1246	1.7754
6.3593	1.6796
6.5565	1.5954
6.7013	1.5307
6.9143	1.4315
7.1815	1.7665
7.2455	1.2665
7.4502	1.1568
7.5569	1.0969

TABLE VI
DIMENSIONAL DESCRIPTION
SRM NOZZLES N_{17}

$M = 0.9, 1.2; \ \varepsilon = 7.0$

NONDIMENSIONAL COORDINATES

initial angle = 23°
exit lip angle = 11°

$r^* = 0.509$ in.

POINT NO.	AXIAL X/r^*	RADIAL r/r^*	NOZZLE GEOMETRY
1	0.00000	1.00000	Throat Plane
2	0.04689	1.00184	
3	0.11719	1.01155	Circular arc
4	0.16409	1.02286	section
5	0.21098	1.03832	
6	0.23443	1.04766	Conical
7	0.54862	1.18106	section
8	0.80001	1.28777	
9	0.86284	1.31443	Contoured
10	1.13502	1.42312	section
11	1.50148	1.57291	
12	1.93249	1.73122	
13	2.29137	1.85372	
14	2.67702	1.97678	
15	3.08772	2.09868	
16	3.52343	2.21816	
17	3.98088	2.33472	
18	4.45984	2.44695	
19	4.79089	2.51908	
20	5.13099	2.58921	
21	5.42124	2.64578	Exit Plane

Notes:

1. Positive directions of force cofficients, moment coefficients, and angles are indicated by arrow
2. For clarity, origins of wind and stability axes have been displaced from the center of gravity

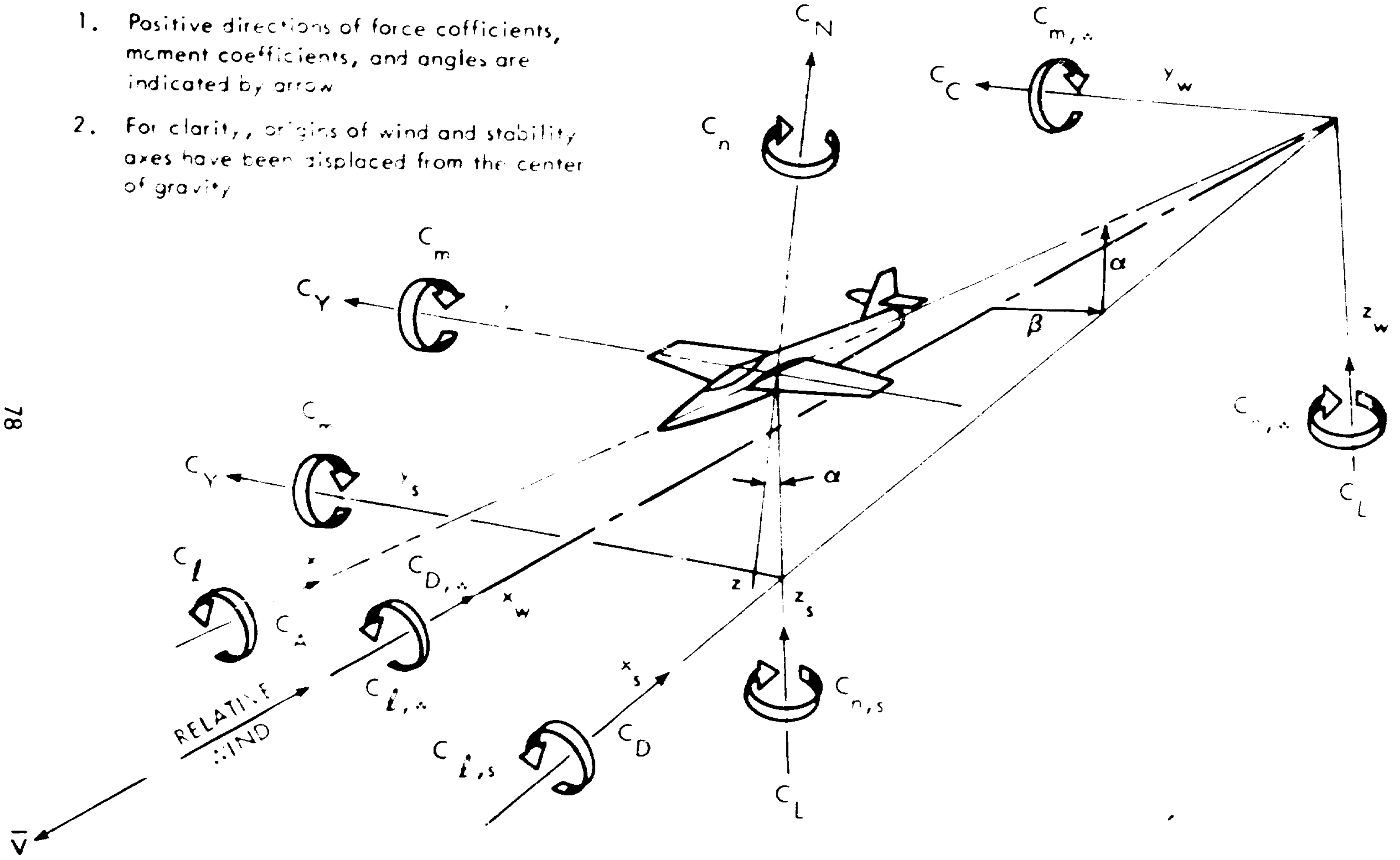
C_N
$C_{m,w}$
C_C
y_w
C_n
C_m
C_Y
α
β
z_w
$C_{n,w}$
C_L
C_Y
y_s
α
C_l
x
$C_{D,w}$
x_w
z
z_s
C_A
$C_{l,w}$
RELATIVE WIND
x_s
$C_{n,s}$
C_D
$C_{l,s}$
C_L
$\bar{V}$

Figure 1. - Axis Systems.

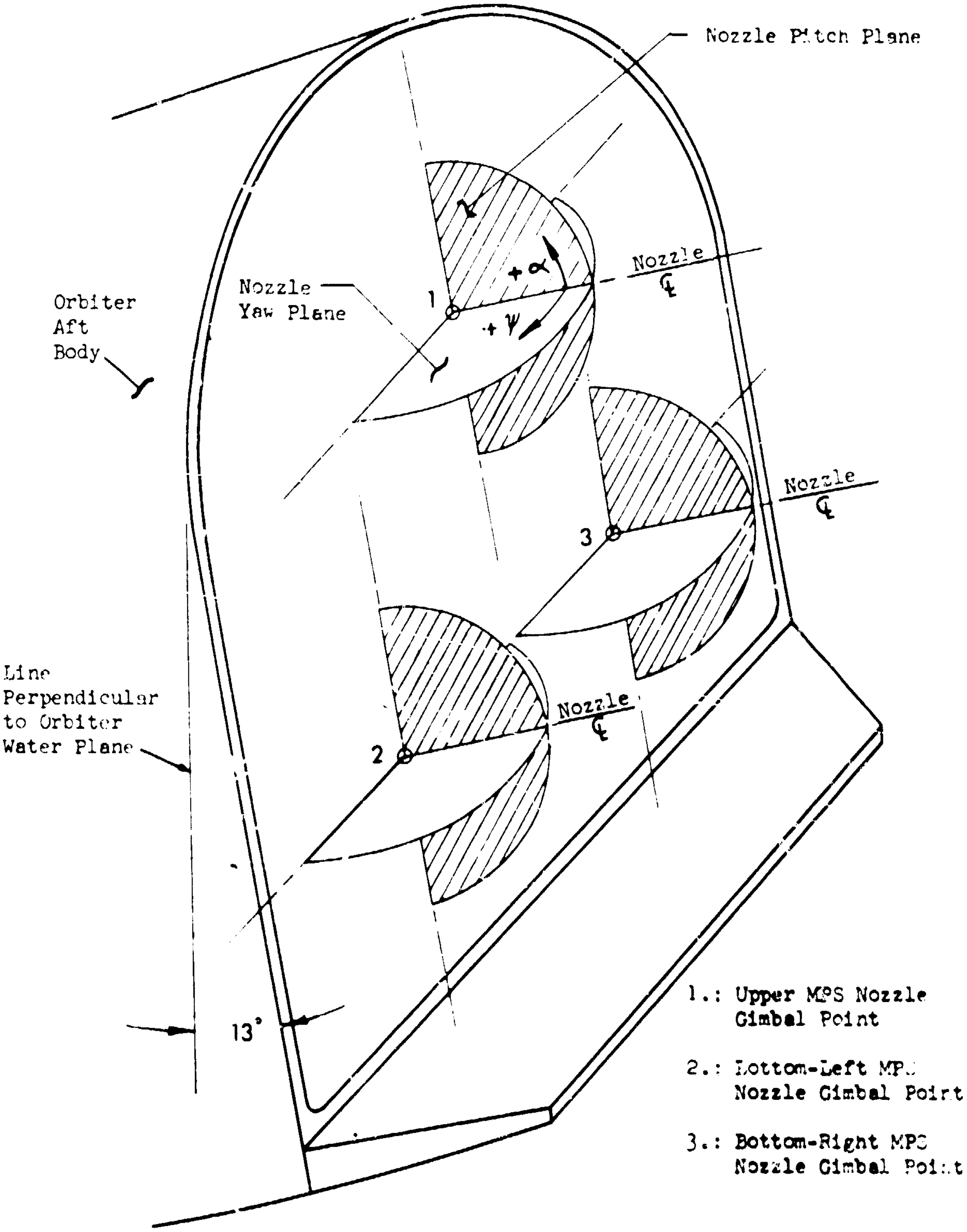

Nozzle Pitch Plane
Nozzle ℄
Orbiter Aft Body
Nozzle Yaw Plane
1
+α
+ψ
Nozzle ℄
3
Line Perpendicular to Orbiter Water Plane
Nozzle ℄
2
13°
1.: Upper MPS Nozzle Gimbal Point
2.: Bottom-Left MPS Nozzle Gimbal Point
3.: Bottom-Right MPS Nozzle Gimbal Point

Figure 2.a. - Gimbal Planes and Sign Conventions.

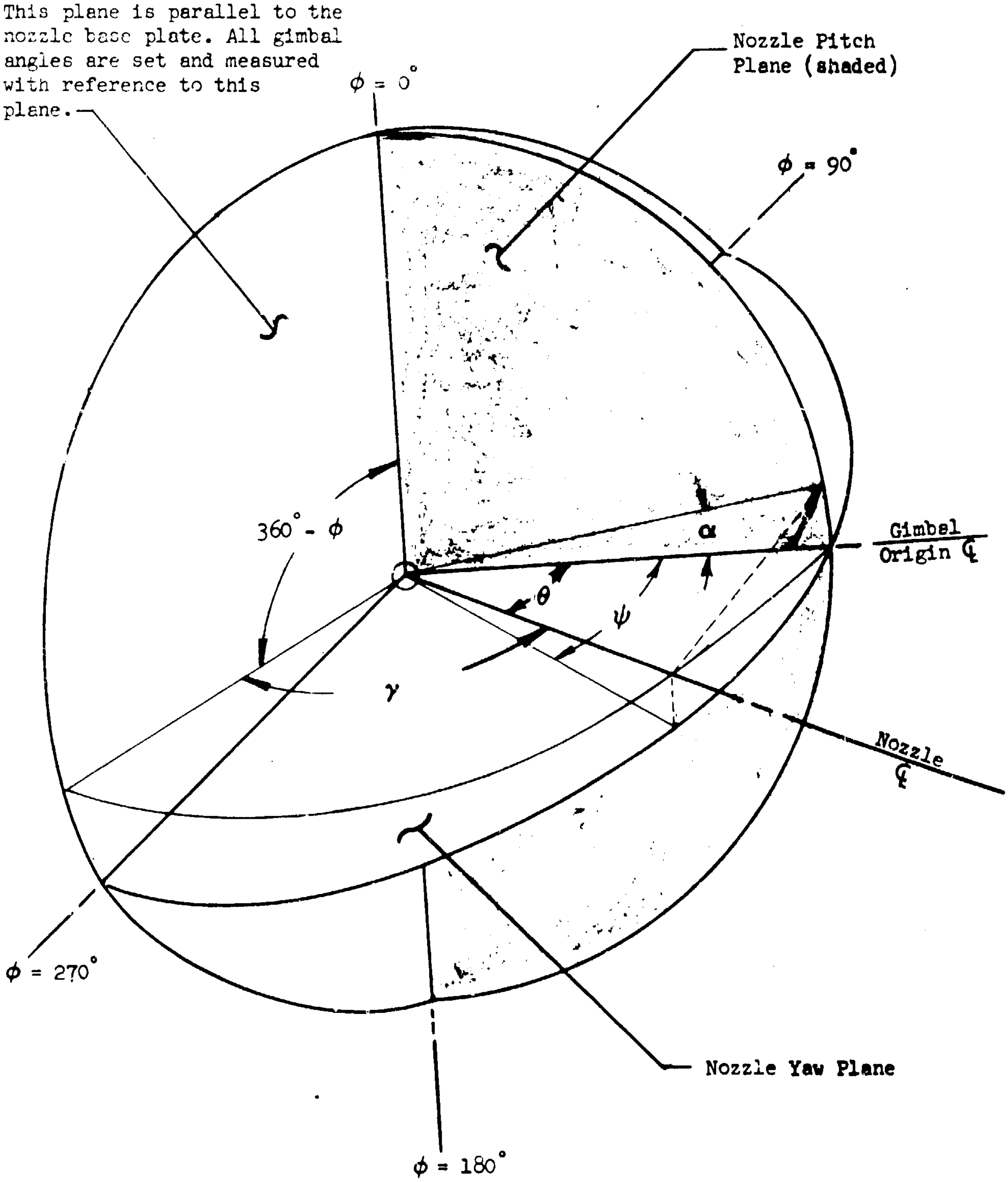
This plane is parallel to the nozzle base plate. All gimbal angles are set and measured with reference to this plane.
$\phi = 0^\circ$
Nozzle Pitch Plane (shaded)
$\phi = 90^\circ$
$360^\circ - \phi$
α
Gimbal Origin ℄
θ
ψ
γ
Nozzle ℄
$\phi = 270^\circ$
Nozzle Yaw Plane
$\phi = 180^\circ$

Figure 2.b.- Nozzle Gimbal Angle.

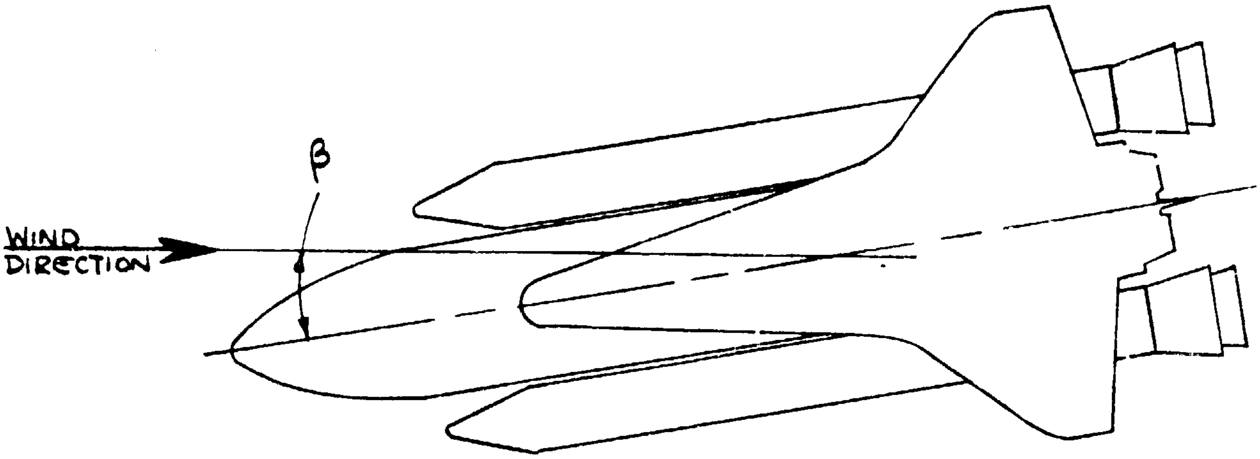
β
WIND DIRECTION

Angle of Sideslip, β

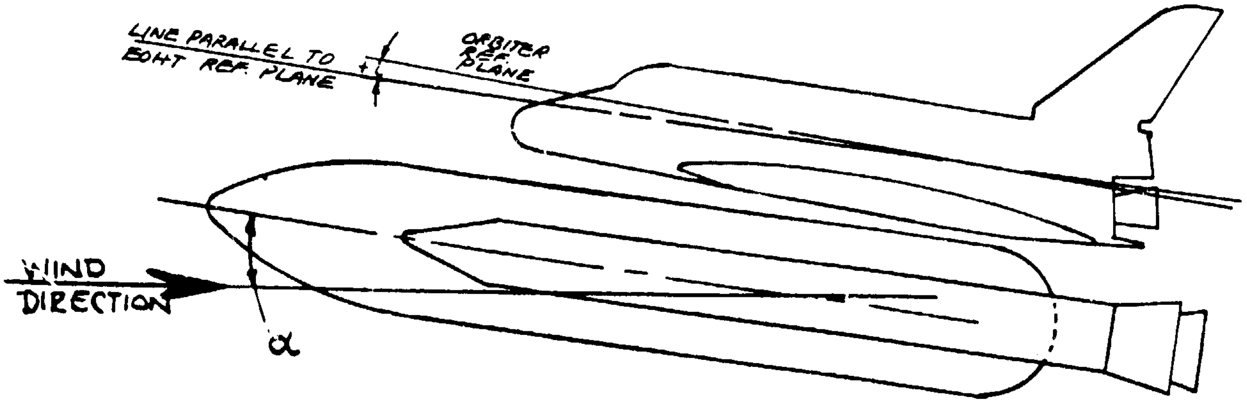
LINE PARALLEL TO EOHT REF. PLANE
+
ORBITER REF. PLANE
WIND DIRECTION
α

Angle of Attack, α, and Angle of Incidence, i

Figure 2.c. - Sign Convention for Angle of Sideslip, Angle of Attack, and Incidence Angle.

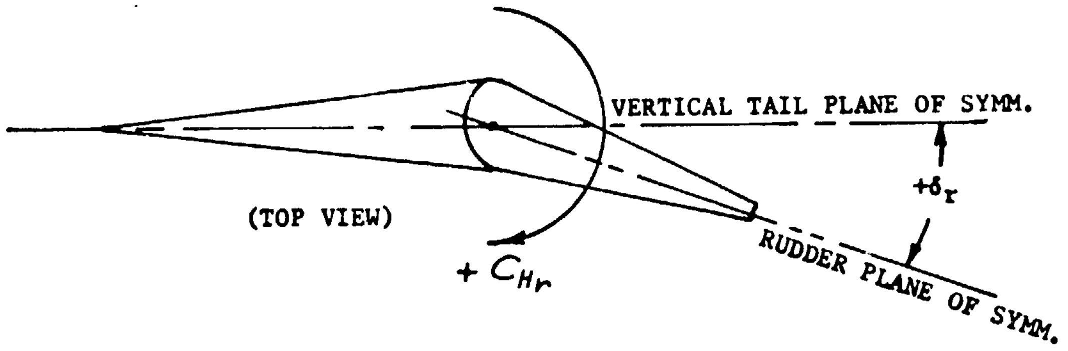
VERTICAL TAIL PLANE OF SYMM.
$+\delta_r$
(TOP VIEW)
RUDDER PLANE OF SYMM.
$+C_{H_r}$

Rudder Deflection Angle, δ_r
and hinge moment, C_{H_r}

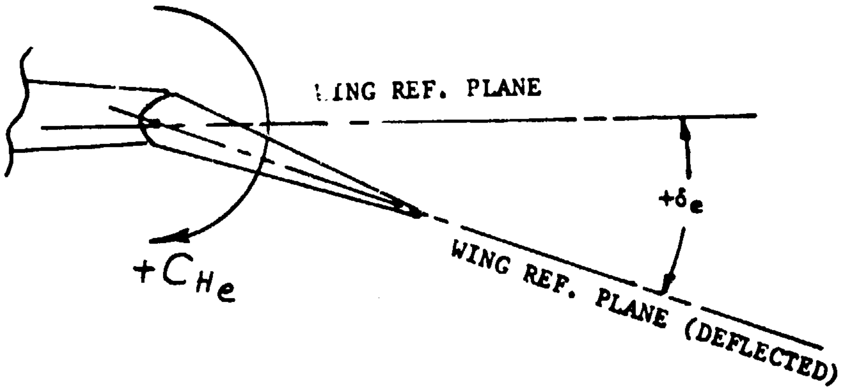
WING REF. PLANE
$+\delta_e$
WING REF. PLANE (DEFLECTED)
$+C_{H_e}$

Elevon Deflection Angle, δ_e
and hinge moment, C_{H_e}

Figure 2.d. - Sign Convention for Rudder and Elevon Deflections.

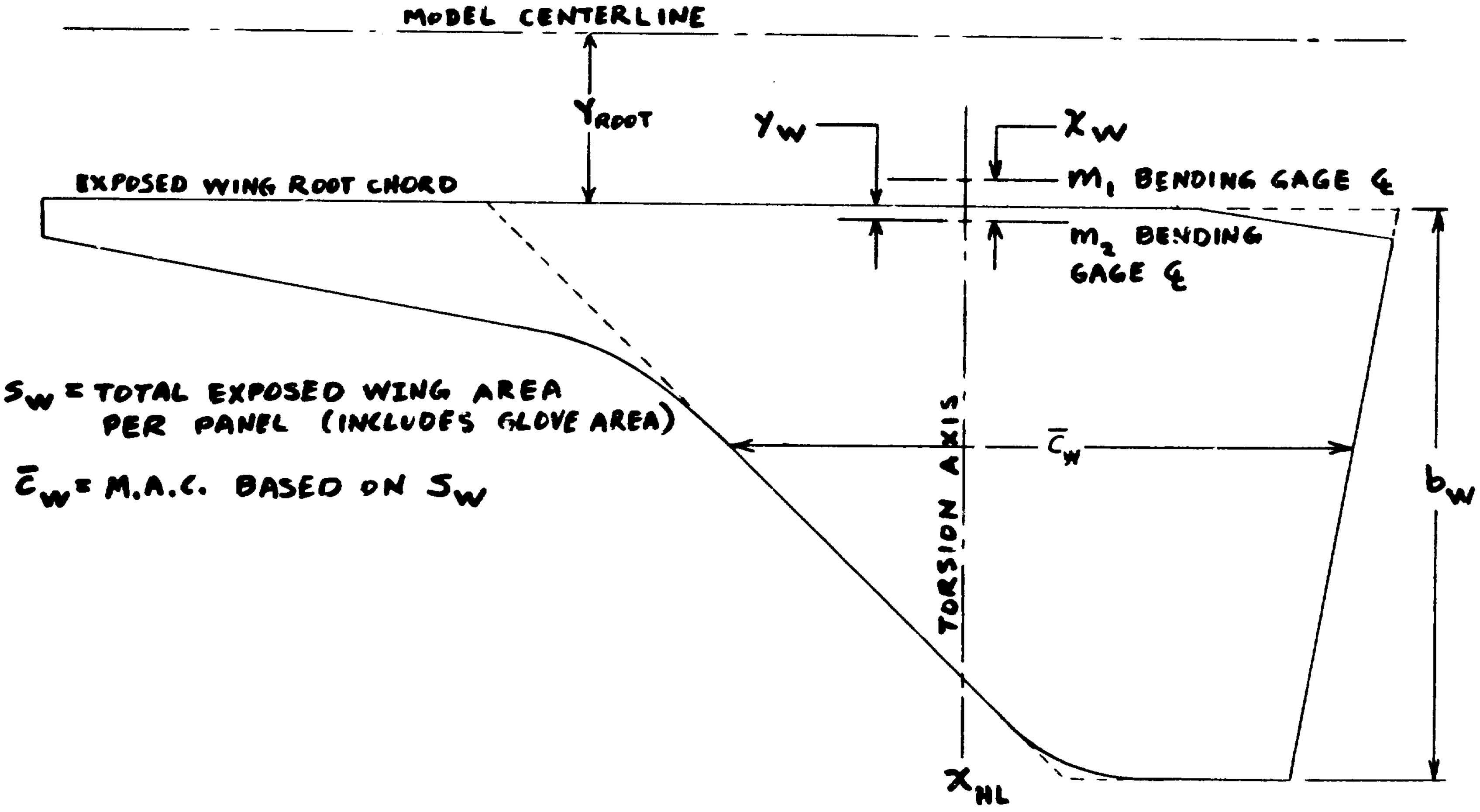
MODEL CENTERLINE
Y_{ROOT}
EXPOSED WING ROOT CHORD
Y_W
X_W
M_1 BENDING GAGE ℄
M_2 BENDING GAGE ℄
TORSION AXIS
$\bar{c}_W$
b_W
X_{HL}
S_W = TOTAL EXPOSED WING AREA PER PANEL (INCLUDES GLOVE AREA)
$\bar{c}_W$ = M.A.C. BASED ON S_W

Figure 2.e. - Wing Hinge Moment Data Reduction Dimensions.

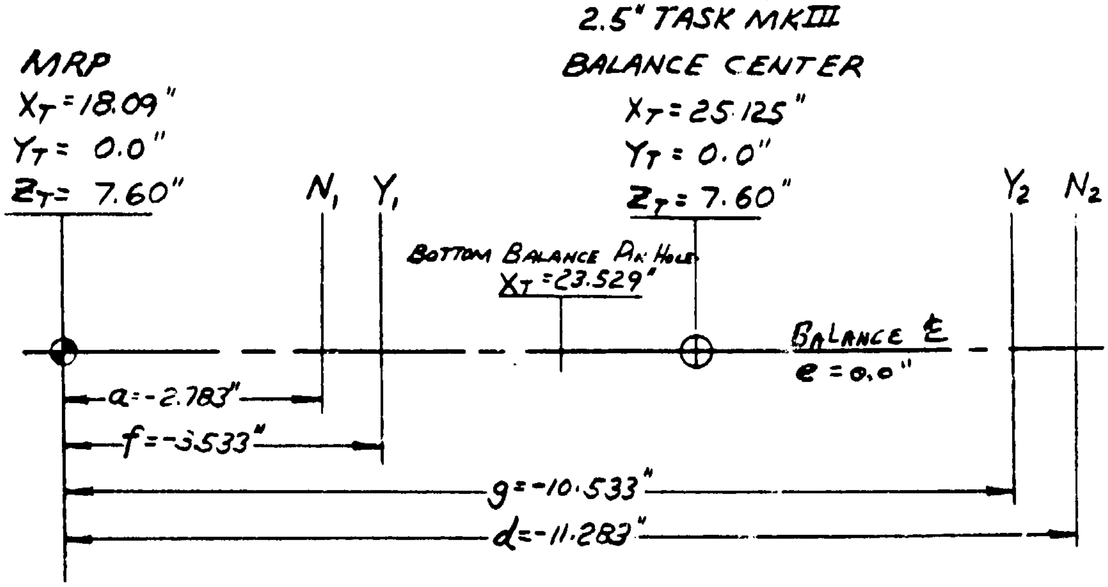
2.5" TASK MKIII
BALANCE CENTER
XT=25.125"
YT=0.0"
ZT=7.60"
MRP
XT=18.09"
YT=0.0"
ZT=7.60"
N1
Y1
Y2
N2
BOTTOM BALANCE PIN HOLE
XT=23.529"
BALANCE ℄
e=0.0"
a=-2.783"
f=-3.533"
g=-10.533"
d=-11.283"

Figure 2.f. - Moment Transfer Diagram.

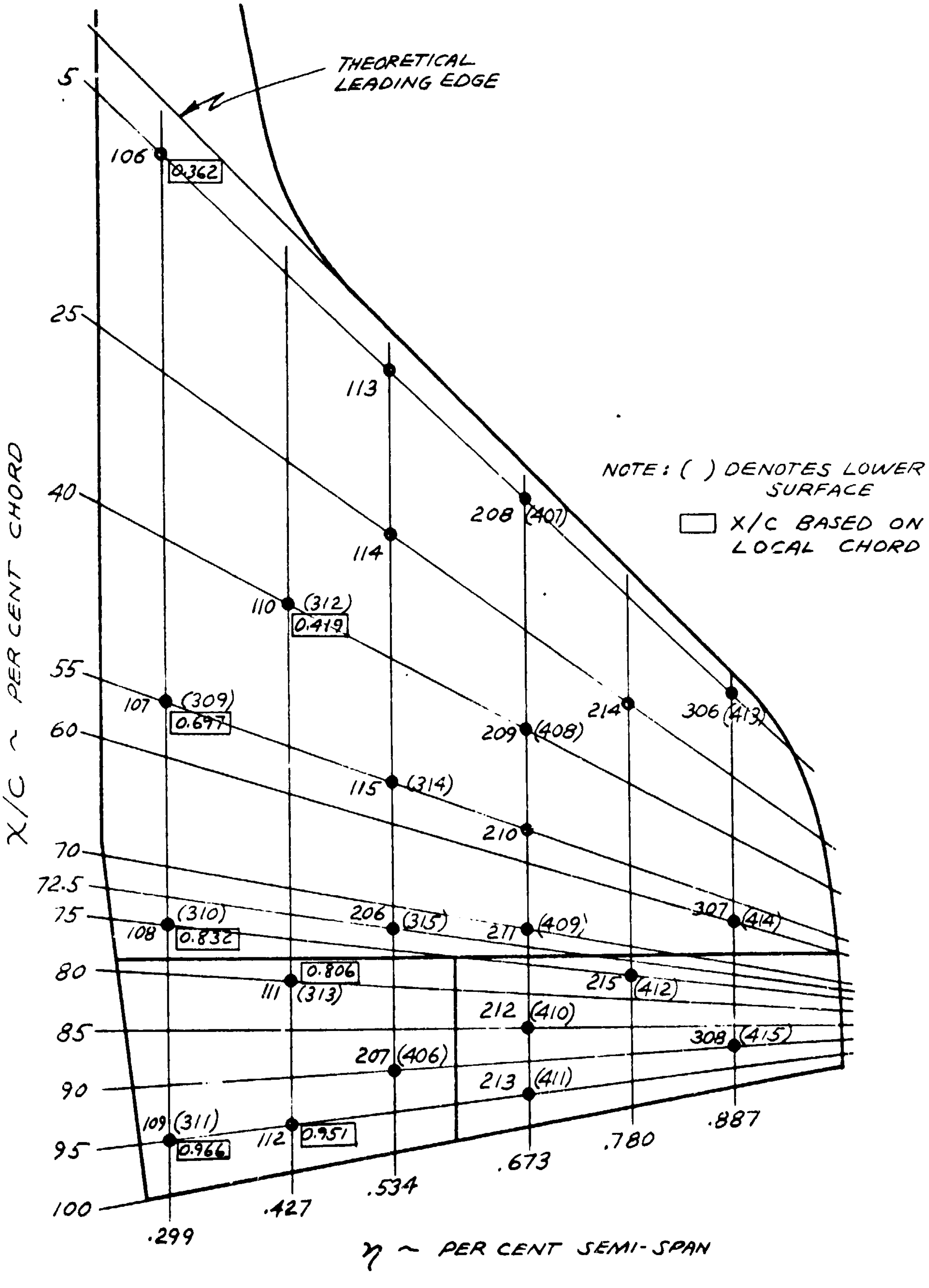
THEORETICAL LEADING EDGE
NOTE: ( ) DENOTES LOWER SURFACE
X/C BASED ON LOCAL CHORD
X/C ~ PER CENT CHORD
η ~ PER CENT SEMI-SPAN
5
25
40
55
60
70
72.5
75
80
85
90
95
100
.299
.427
.534
.673
.780
.887
106
0.362
113
114
208 (407)
110 (312)
0.419
107 (309)
0.697
209 (408)
214
306 (413)
115 (314)
210
108 (310)
0.832
206 (315)
211 (409)
307 (414)
111 (313)
0.806
215 (412)
212 (410)
308 (415)
207 (406)
213 (411)
109 (311)
0.966
112
0.951

Figure 3.a. - Wing Pressure Tap Locations
for Right Hand Wing Panel.

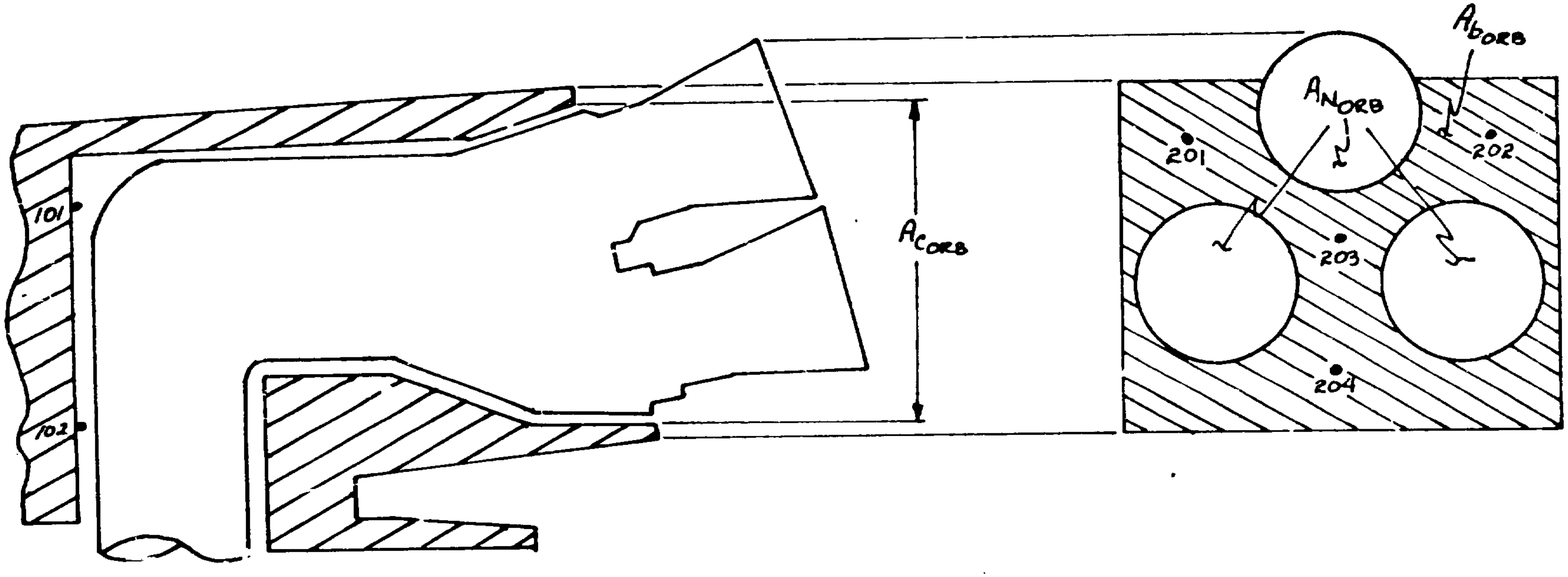
$A_{b_{ORB}}$
$A_{N_{ORB}}$
$A_{C_{ORB}}$
101
102
201
202
203
204

Figure 3.b. - Orbiter Base and Cavity Pressure Tap Locations.

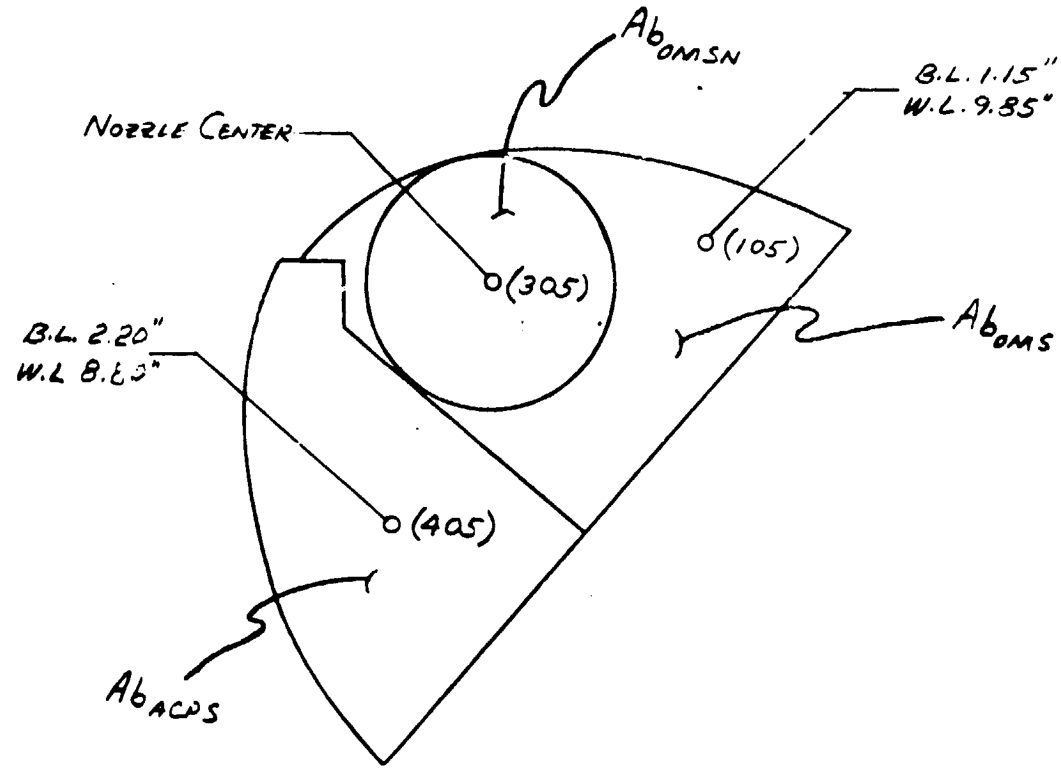
Ab_{OMSN}
B.L. 1.15"
W.L. 9.85"
Nozzle Center
(305)
(105)
Ab_{OMS}
B.L. 2.20"
W.L 8.60"
(405)
Ab_{ACPS}

Figure 3.c. - OMS Pod Base Static Pressure Tap Locations.

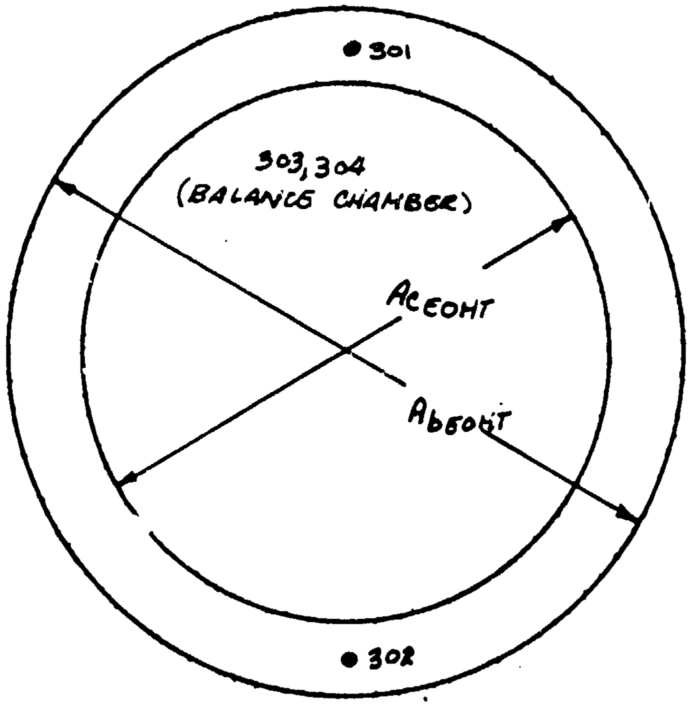
301
303, 304
(BALANCE CHAMBER)
Ac EOHT
Ab EOHT
302

Figure 3.d. - EOHT Pressure Tap Locations.

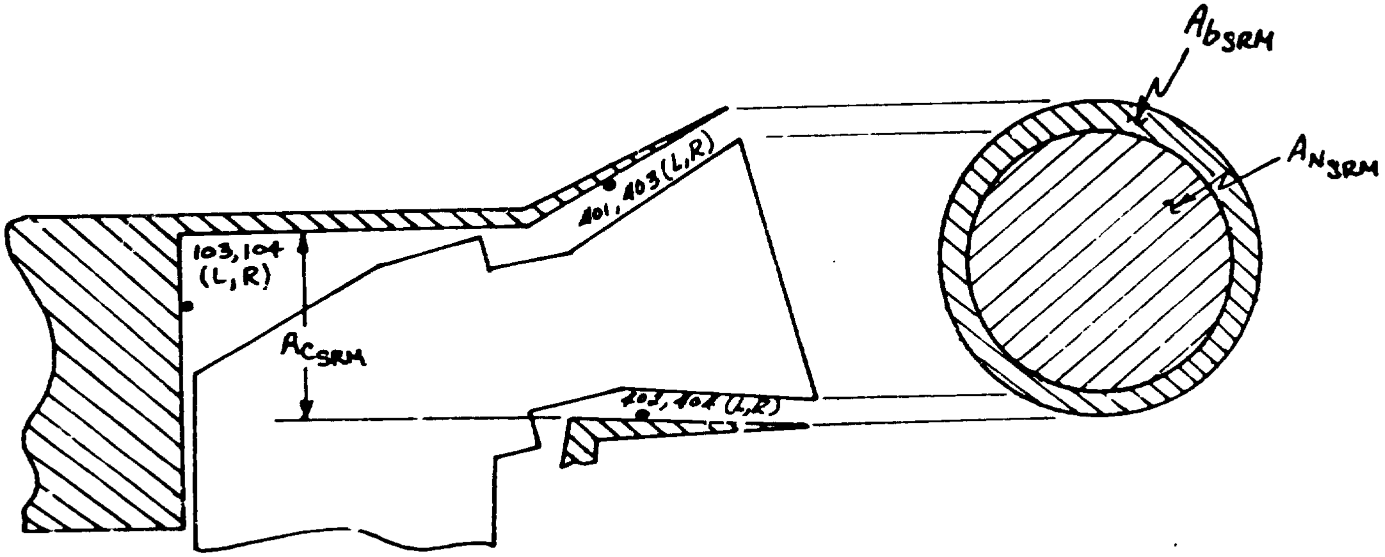
$A_{b_{SRM}}$
$A_{N_{SRM}}$
401, 403 (L,R)
103, 104 (L,R)
$A_{C_{SRM}}$
402, 404 (L,R)

Figure 3 e. - SRM Pressure Tap Locations.

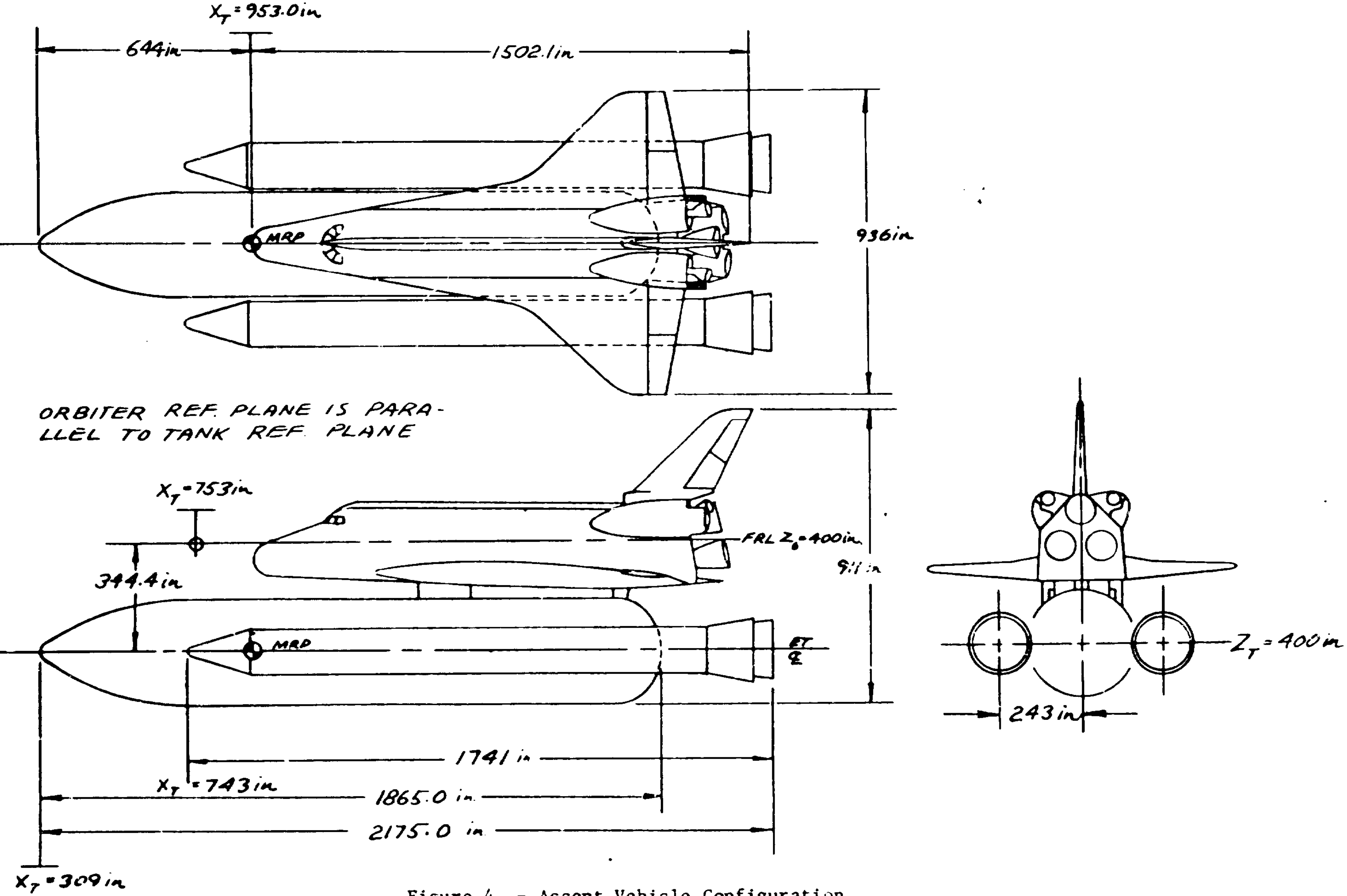

$X_T = 953.0$ in
644 in
1502.1 in
MRP
936 in
ORBITER REF. PLANE IS PARALLEL TO TANK REF. PLANE
$X_T = 753$ in
344.4 in
FRL $Z_o = 400$ in
911 in
MRP
ET ℄
$Z_T = 400$ in
243 in
1741 in
$X_T = 743$ in
1865.0 in
2175.0 in
$X_T = 309$ in

Figure 4. - Ascent Vehicle Configuration.

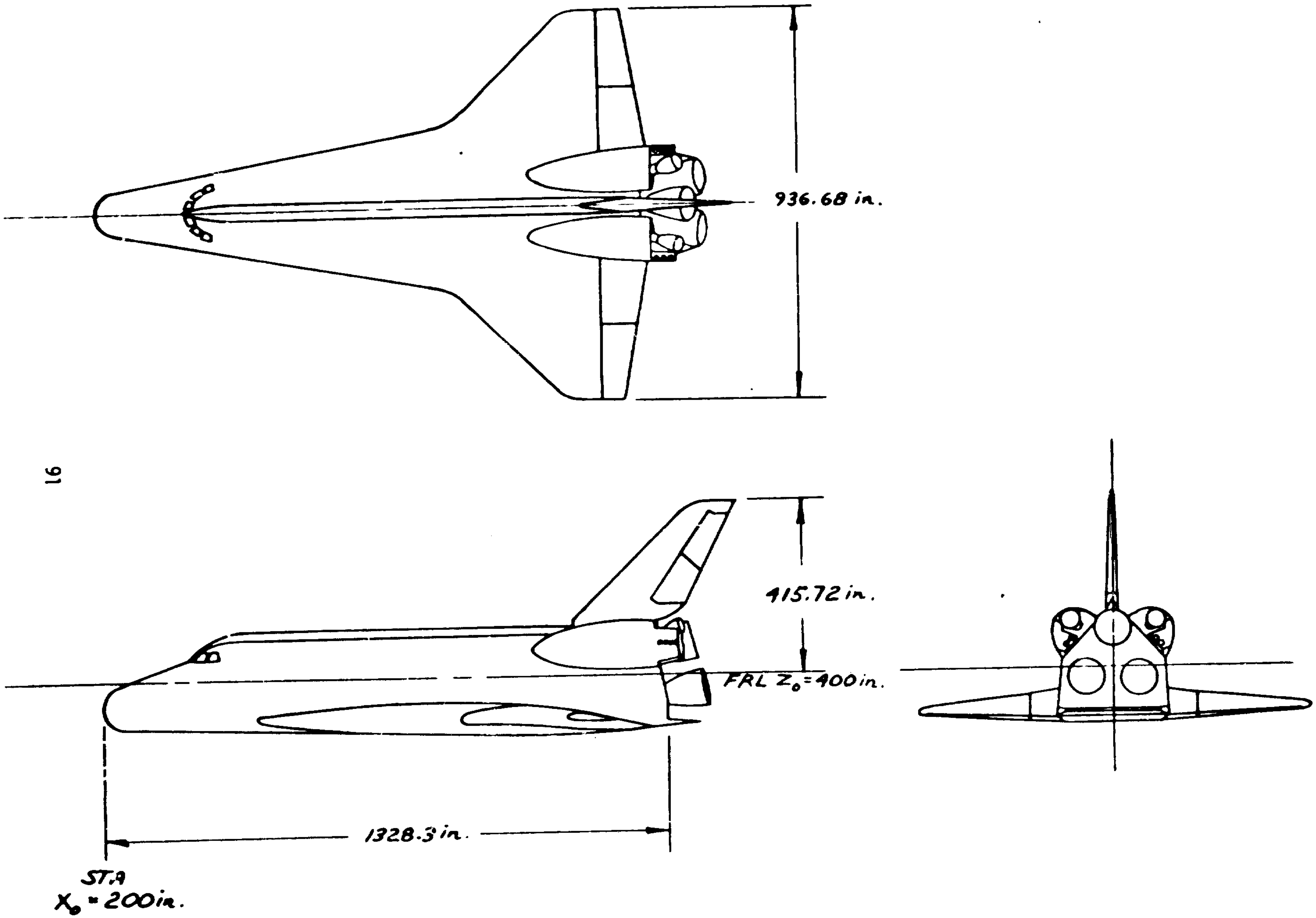
936.68 in.
415.72 in.
FRL Z_o=400 in.
1328.3 in.
STA
X_o=200 in.

Figure 4.a. - 2A Orbiter, Basic Dimensions.

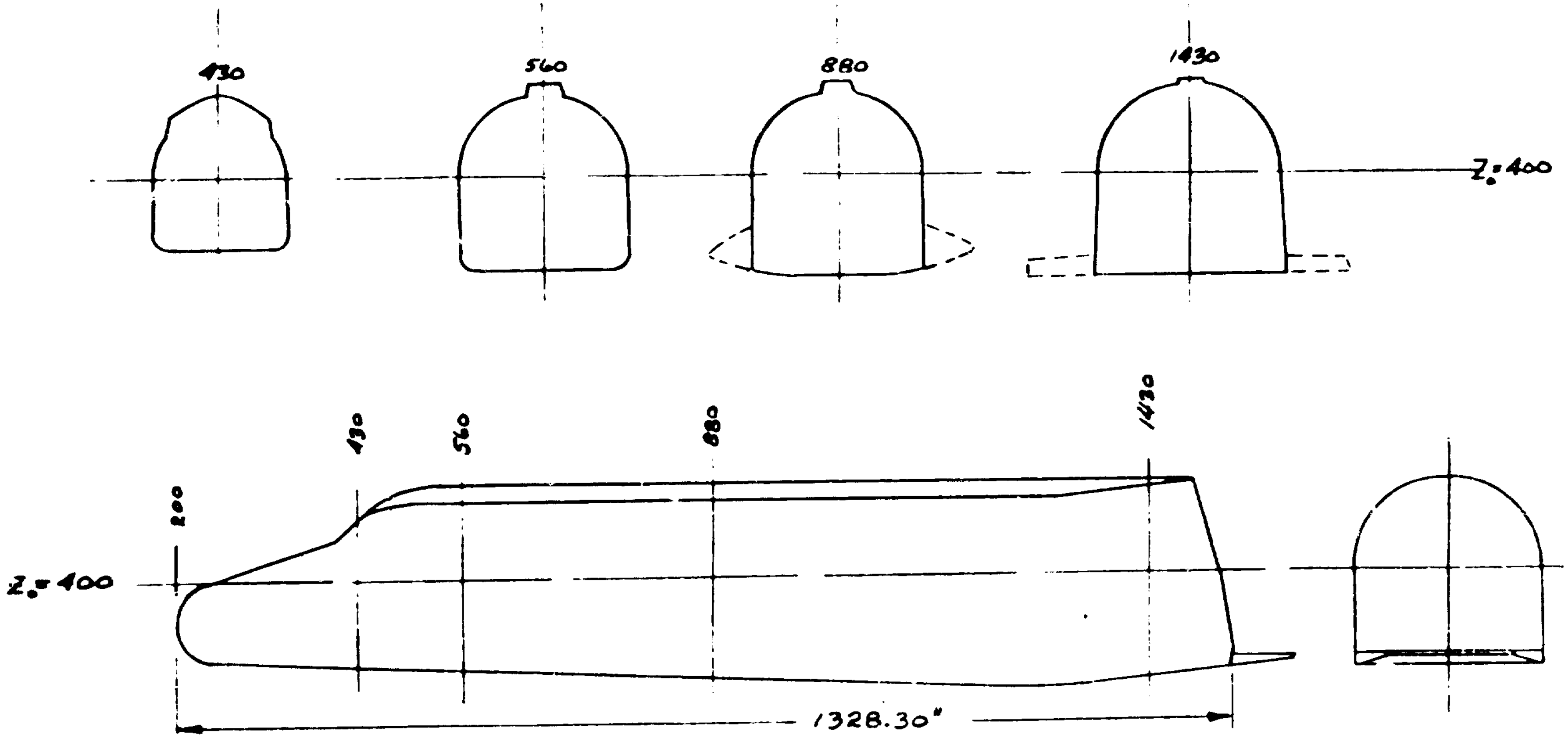
430
560
880
1430
Z₀=400
200
430
560
880
1430
Z₀=400
1328.30"

Figure 4.b. - 2A Orbiter, Fuselage with Body Flap.

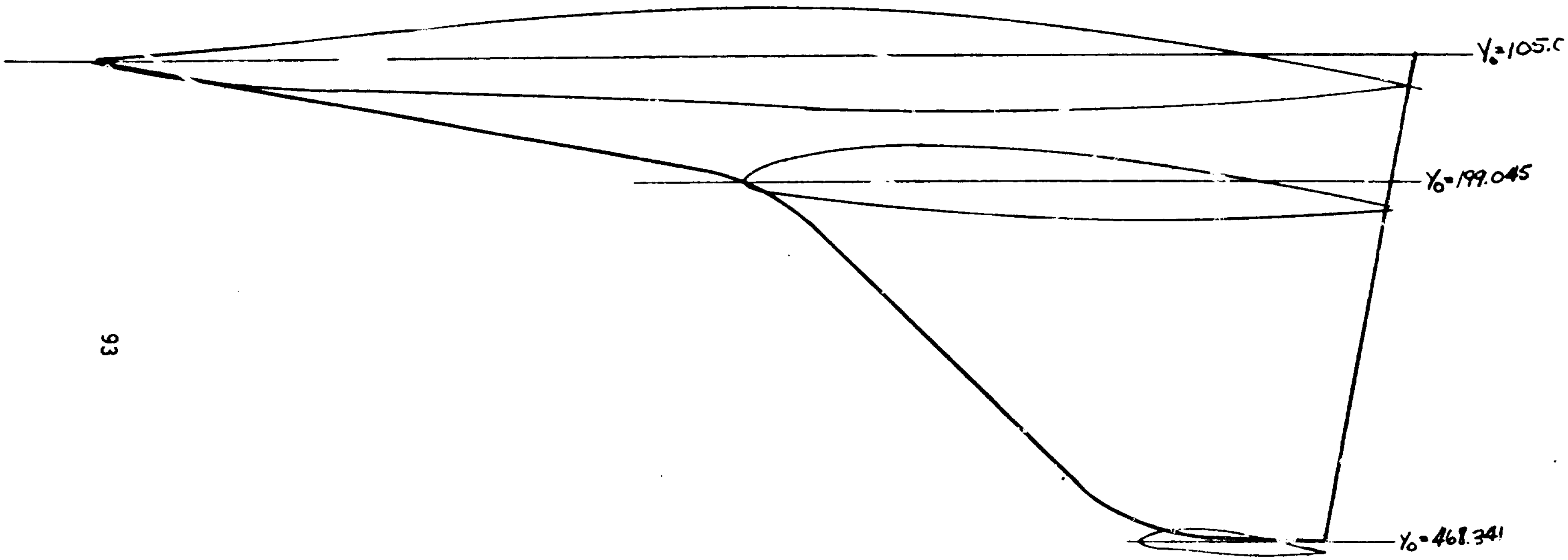
$Y_0 = 105.0$
$Y_0 = 199.045$
$Y_0 = 468.341$

Figure 4.c. - 2A Orbiter, Wing.

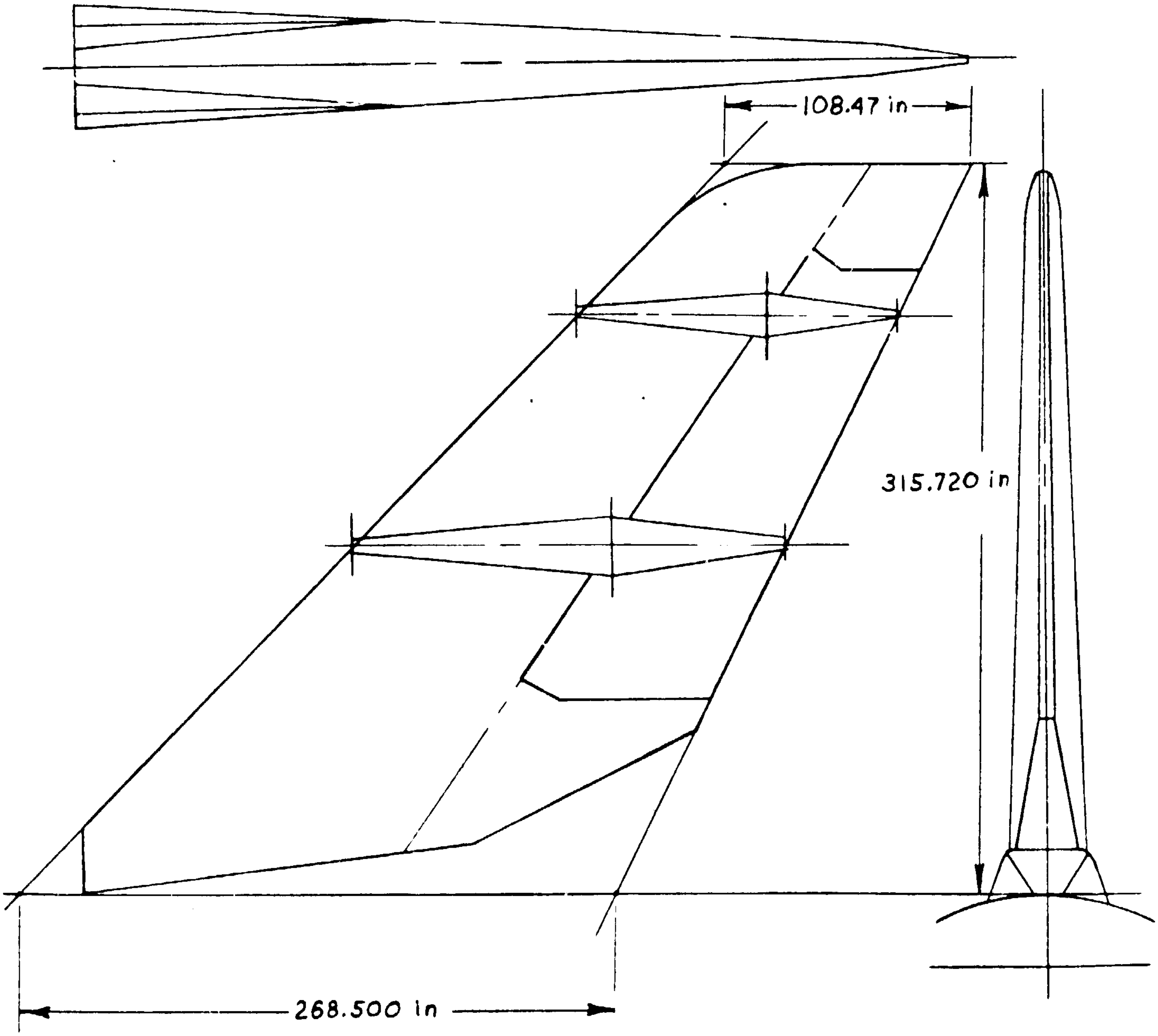
108.47 in
315.720 in
268.500 in

Figure 4.d. - 2A Orbiter, Vertical Tail.

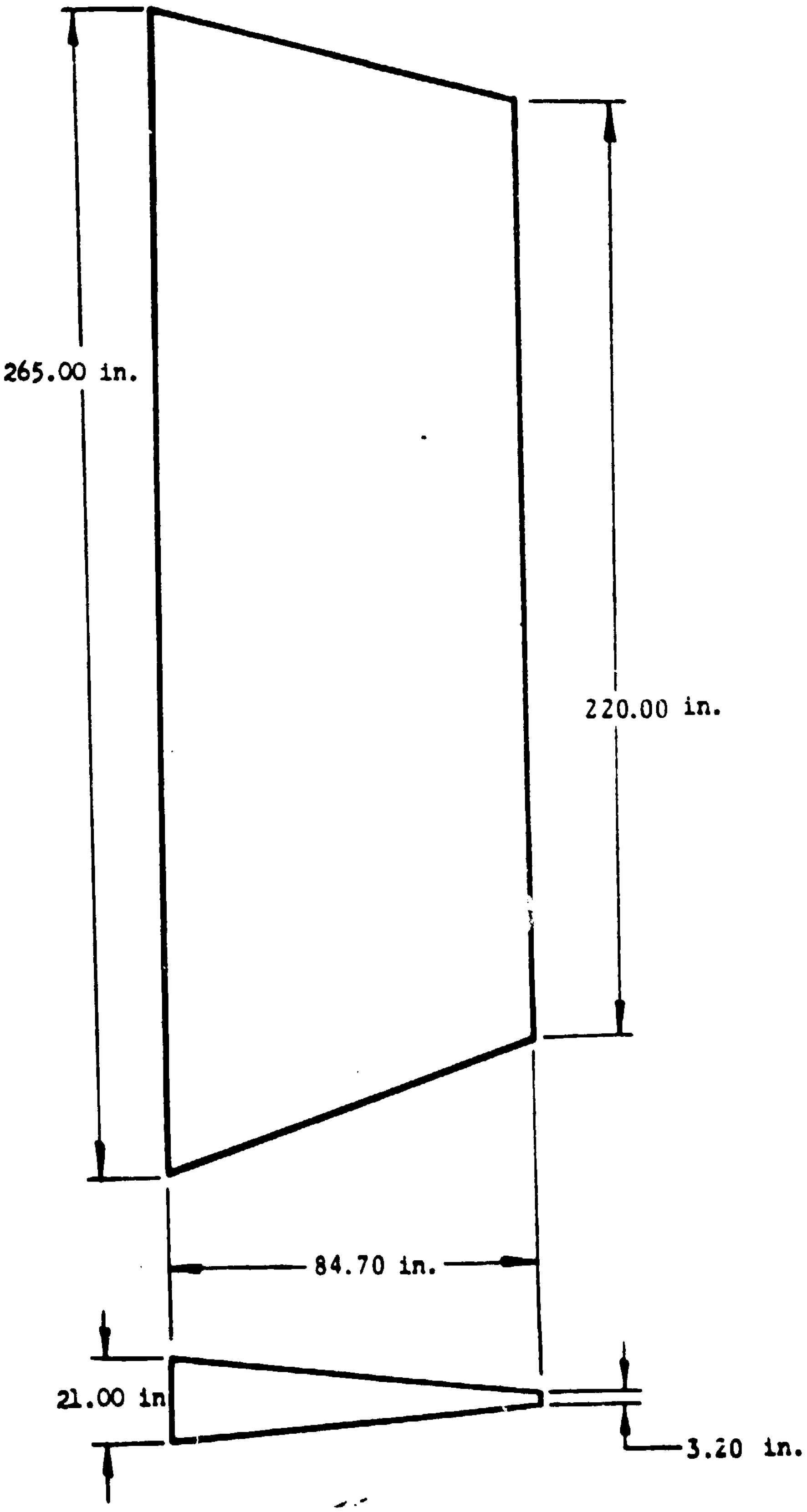
265.00 in.
220.00 in.
84.70 in.
21.00 in
3.20 in.

Figure 4.e. - 2A Orbiter, Body Flap, F4.

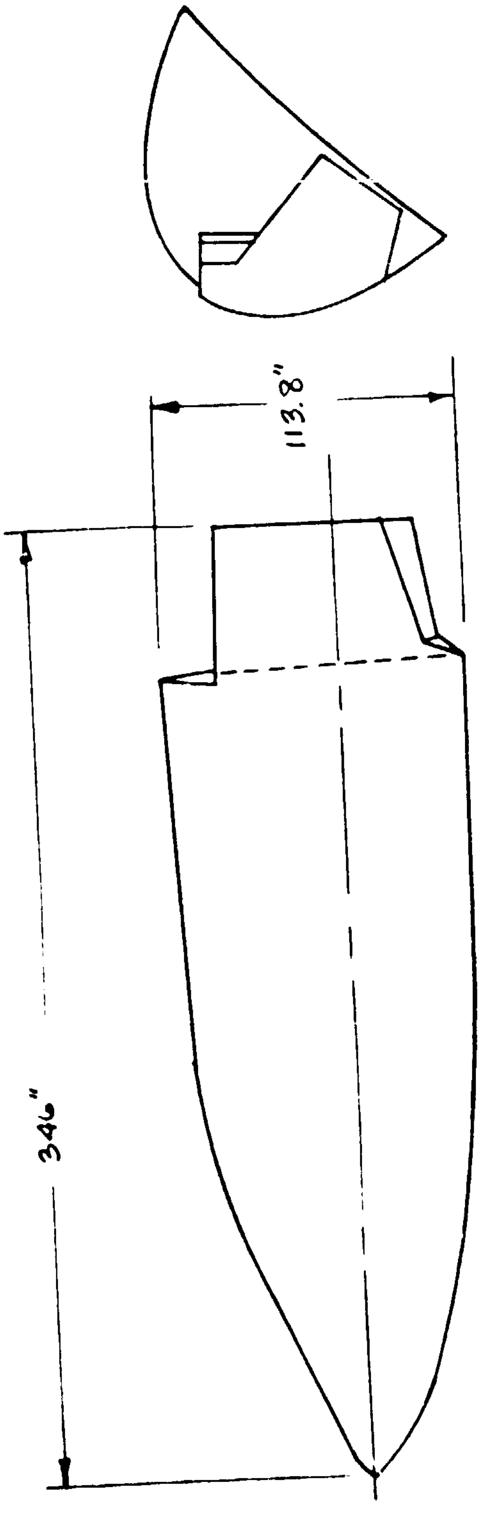

Figure 4.5. - 2A Orbiter, OMS Pod.

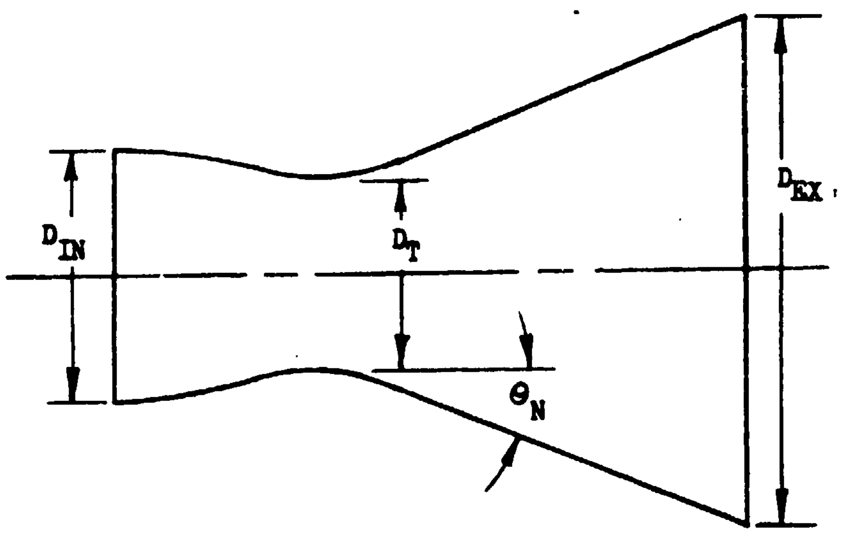
D_{IN}
D_T
D_{EX}
θ_N

Figure 4.g. - 2A Orbiter, Nozzle.

Nozzles N_9, N_{10}

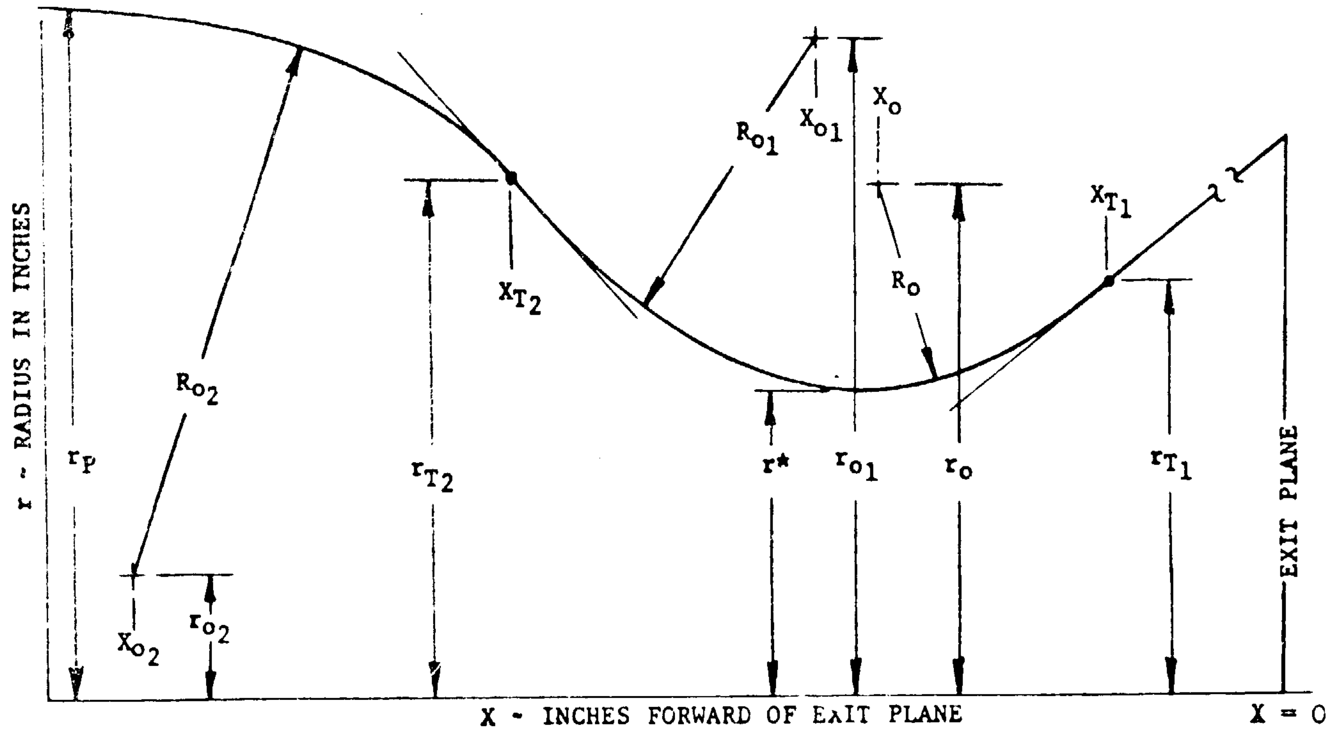

r - RADIUS IN INCHES
r_P
R_{o_2}
X_{o_2}
r_{o_2}
X_{T_2}
r_{T_2}
R_{o_1}
X_{o_1}
X_o
R_o
r*
r_{o_1}
r_o
X_{T_1}
r_{T_1}
EXIT PLANE
X - INCHES FORWARD OF EXIT PLANE
X = 0

	N_9, N_{10}
X_{T_1}	2.0192
r_{T_1}	0.2931
R_o	0.2003
X_o	2.1178
r_o	0.4675
R_{o_1}	0.2003
X_{o_1}	2.1178
r_{o_1}	0.4675
r*	0.2672
X_{T_2}	2.2239
r_{T_2}	0.2977
X_{o_2}	2.4231
r_{o_2}	-0.0212
R_{o_2}	0.3759
r_p	0.3547

DESIGN INFORMATION FOR ORB-1-ABC NOZZLE CONTOURS

(Mach Nos. 0.9, 1.25, 1.55, 2.0 3.0, and 3.5)

Figure 4.g. - Concluded.

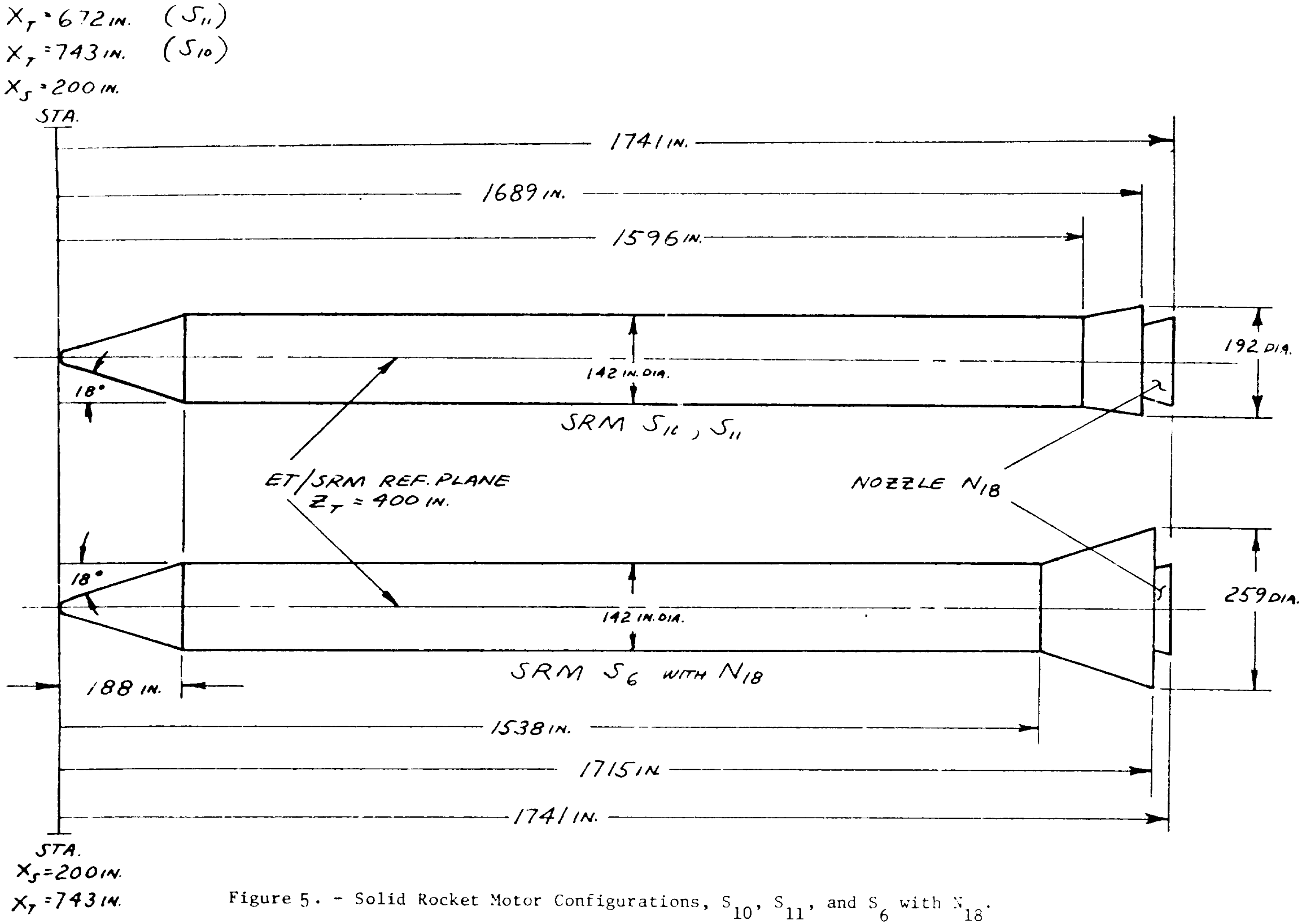
X_T = 672 IN. (S_{11})
X_T = 743 IN. (S_{10})
X_S = 200 IN.
STA.
1741 IN.
1689 IN.
1596 IN.
18°
142 IN. DIA.
192 DIA.
SRM S_{10}, S_{11}
ET/SRM REF. PLANE
Z_T = 400 IN.
NOZZLE N_{18}
18°
142 IN. DIA.
259 DIA.
188 IN.
SRM S_6 WITH N_{18}
1538 IN.
1715 IN.
1741 IN.
STA.
X_S=200 IN.
X_T =743 IN.

Figure 5. - Solid Rocket Motor Configurations, S_{10}, S_{11}, and S_6 with N_{18}.

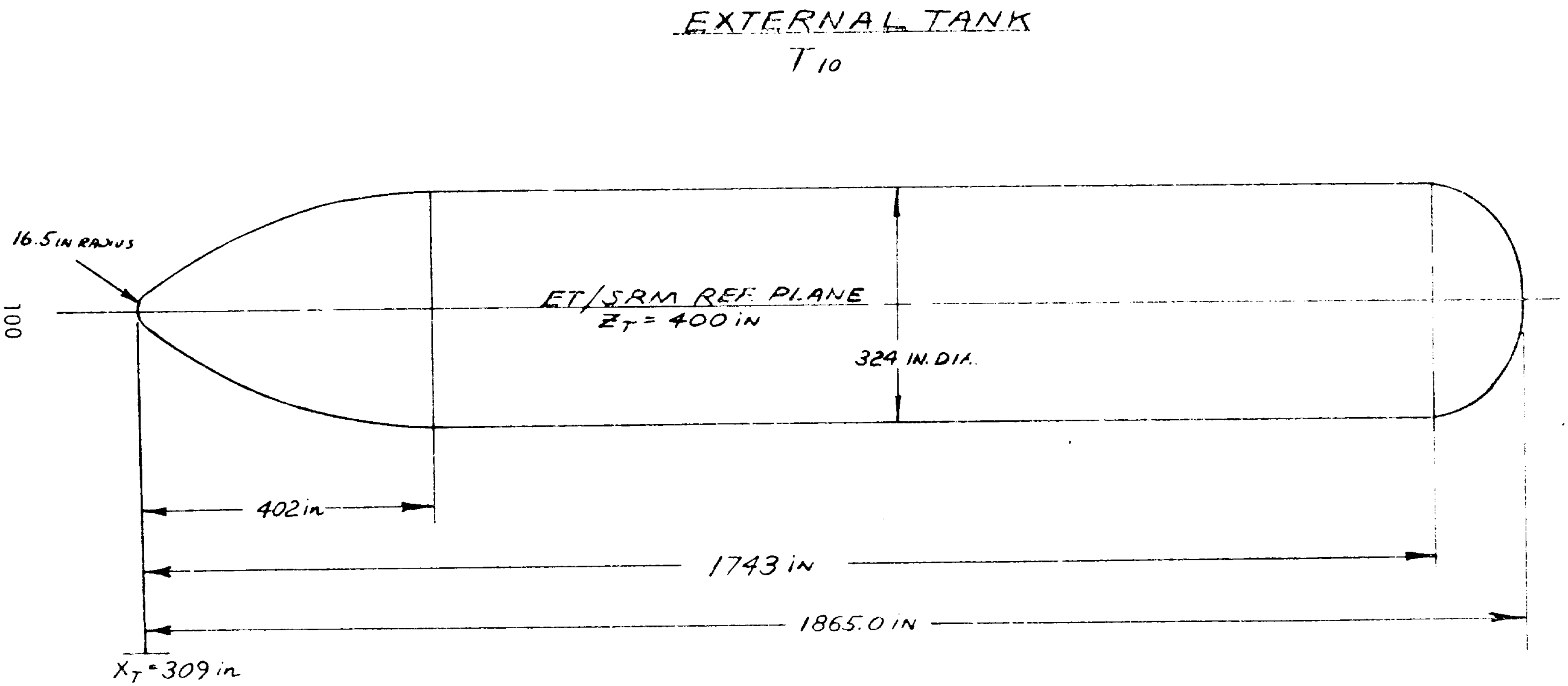
EXTERNAL TANK
T_{10}
16.5 IN RADIUS
ET/SRM REF PLANE
$Z_T = 400$ IN
324 IN. DIA.
402 in
1743 IN
1865.0 IN
$X_T = 309$ in

Figure 6. - External Tank Configuration, T_{10}.

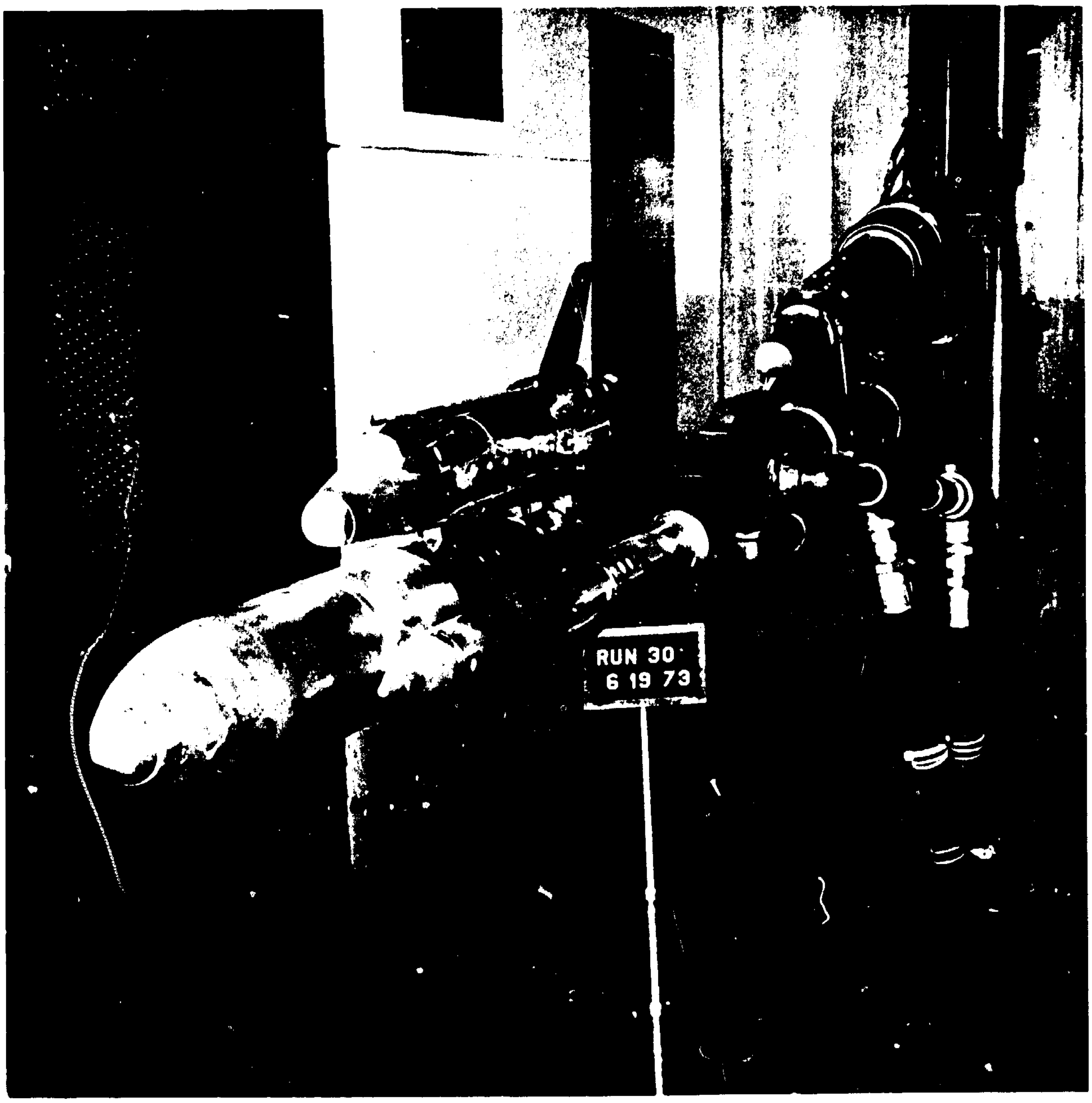
RUN 30
6 19 73

Figure 7.a. - Front View of Integrated Vehicle.

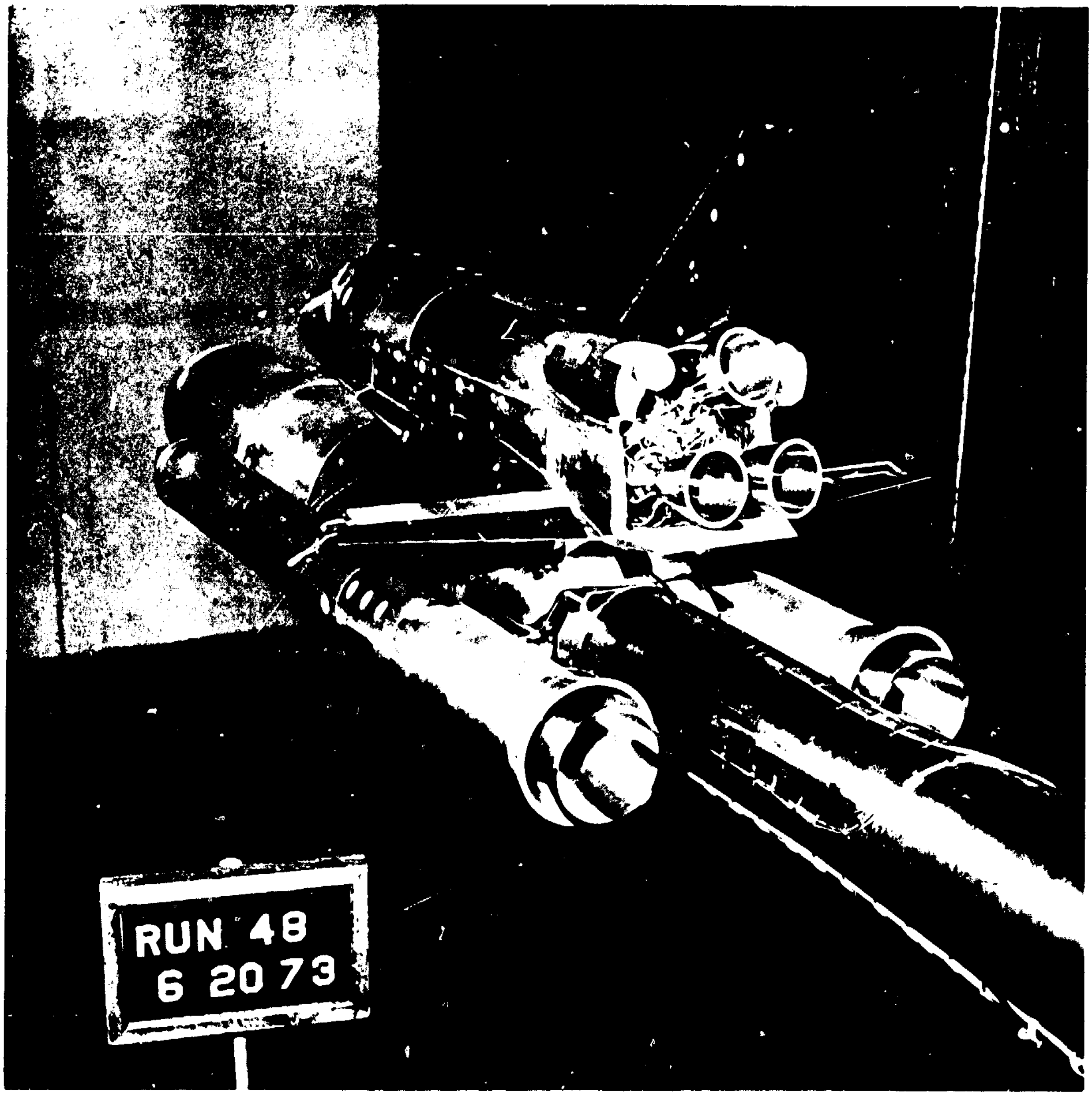
RUN 48
6 20 73

Figure 7.b. - Aft View of Integrated Vehicle with Orbiter Nozzle Gimbaled.

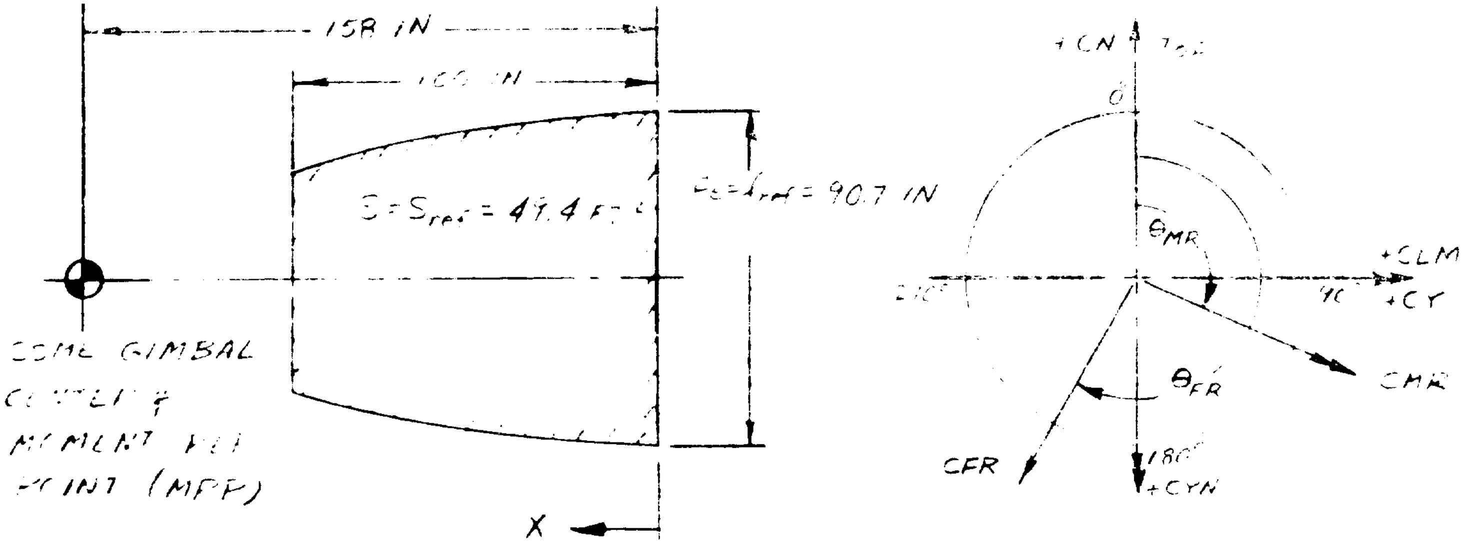
158 IN
100 IN
S = S_ref = 49.4 FT²
d_e = l_ref = 90.7 IN
SSME GIMBAL
CENTER &
MOMENT REF
POINT (MRP)
X
+CN 360
0
θ_MR
+CLM
90
+CY
270
θ_FR
CMR
CFR
180
+CYN

$$S_N = S_{ref} = 49.4\ FT^2$$

$$d_e = l_{ref} = 90.7\ IN$$

$$C_{FR} = \sqrt{CN^2 + CY^2}$$

$$C_{MR} = \sqrt{CLM^2 + CYN^2}$$

$$CN' = \frac{\partial CN}{\partial (x/d_e)} \qquad CLM' = \frac{\partial CLM}{\partial (x/d_e)}$$

$$CY' = \frac{\partial CY}{\partial (x/d_e)} \qquad CYN' = \frac{\partial CYN}{\partial (x/d_e)}$$

Figure 8. SSME Nozzle Loads Nomenclature.

APPENDIX

TABULATED DATA

VOLUME 2

PRECEDING PAGE BLANK NOT FILMED

```
DATE 05 NOV 75          TABULATED DATA FOR CAL T14-053 (IA36)                                        PAGE    1

                              CALSPAN T14-053     02 T1 S1      IA36                    (RUF015)   ( 26 SEP 73  )

          REFERENCE DATA                                                                     PARAMETRIC DATA

SREF  =  2690.0004 FT.SQ.   XMRP  =   953.0001 INCHES                         BETA   =      .000   MPSRA  =      .000
LREF  =  1328.0002 INCHES   YMRP  =      .0000 INCHES                         POWER  =      .000   RUDDER =      .000
BREF  =  1328.0002 INCHES   ZMRP  =   400.0000 INCHES
SCALE =       .0190

                        RUN NO.   15/ 0    RN/L =   2.82    GRADIENT INTERVAL =  -5.00/  5.00

 MACH      ALPHA      CN       CLMF      CLM       CAF       CA        CY        CYN       CBL       CNW       CHW
  .905    -7.760   -.45510    .14780    .15130    .18733    .22476   -.03110    .02170   -.00530   -.13900    .01160
  .903    -3.790   -.21330    .04830    .05220    .12056    .21641   -.02970    .02220   -.00500    .00850    .00210
  .901     -.010    .01360   -.04060   -.03690    .11035    .21391   -.03080    .02270   -.00490    .13540   -.01010
  .901     3.700    .21690   -.11010   -.10690    .10893    .20166   -.02860    .02160   -.00500    .24920   -.02950
  .901     7.670    .40740   -.17070   -.16760    .10422    .19505   -.02150    .01730   -.00520    .33070   -.04400
         GRADIENT   .05744   -.02116   -.02125   -.00155   -.00197    .00015   -.00008    .00000    .03214   -.00408

                              CALSPAN T14-053     02 T1 S1      IA36                    (RUF018)   ( 26 SEP 73  )

          REFERENCE DATA                                                                     PARAMETRIC DATA

SREF  =  2690.0004 FT.SQ.   XMRP  =   953.0001 INCHES                         BETA   =      .000   MPSRA  =      .000
LREF  =  1328.0002 INCHES   YMRP  =      .0000 INCHES                         POWER  =      .000   RUDDER =      .000
BREF  =  1328.0002 INCHES   ZMRP  =   400.0000 INCHES
SCALE =       .0190

                        RUN NO.   18/ 0    RN/L =   2.99    GRADIENT INTERVAL =  -5.00/  5.00

 MACH      ALPHA      CN       CLMF      CLM       CAF       CA        CY        CYN       CBL       CNW       CHW
 1.200    -8.100   -.53610    .20310    .20960    .23258    .38115   -.00630    .00100   -.00170   -.19050   -.00240
 1.001    -6.120   -.40070    .15070    .15570    .23954    .38457   -.00790    .00120   -.00220   -.11360   -.00400
 1.201    -4.090   -.26060    .09610    .10200    .24242    .38692   -.00740    .00250   -.00260   -.02020   -.00590
         GRADIENT   .00000    .00000    .00000    .00000    .00000    .00000    .00000    .00000    .00000    .00000
```

REPRODUCIBILITY OF THE
ORIGINAL PAGE IS POOR

```
DATE 05 NOV 75          TABULATED DATA FOR CAL T14-053 (IA35)                                                PAGE   3

                                         CALSPAN T14-053     02 T1 S1     IA35                  (RUF019)     26 SEP 73

               REFERENCE DATA                                                                  PARAMETRIC DATA

SREF  =  2690.0004 FT.SQU   XMRP   =    953.0001 INCHES                          BETA    =        .000   MPSRA  =       .000
LREF  =  1328.0002 INCHES   YMRP   =       .0000 INCHES                          POWER   =        .000   RUDDER =       .000
BREF  =  1328.0002 INCHES   ZMRP   =    400.0000 INCHES
SCALE =        .0190

                           RUN NO.   19/ 0    RN/L =   2.76    GRADIENT INTERVAL =  -5.00/  5.00

  MACH       ALPHA       CN        CLMF       CLM        CAF        CA         CY         CYN        CBL        CNW        CHW
  .903      -8.100    -.48850     .15960     .16330     .10779     .20942    -.03110     .02050    -.00500    -.15340     .01310
  .901      -6.090    -.35780     .10930     .11310     .11125     .21428    -.03430     .02230    -.00570    -.07060     .00830
  .900      -4.090    -.23360     .05950     .06630     .10179     .21081    -.03410     .02400    -.00570    -.03500     .00330
  .901        .010     .00100    -.03740    -.03090     .10803     .20186    -.03180     .02250    -.00470     .12810    -.01050
  .902       2.010     .11790    -.07890    -.07510     .11063     .20054    -.02910     .02080    -.01480     .19810    -.01860
  .903       4.030     .22760    -.11550    -.11330     .10594     .19031    -.03050     .02210    -.00510     .25310    -.02330
  .905       6.070     .31090    -.13410    -.13190     .10367     .19129    -.02040     .01650    -.00560     .27700    -.02390
  .900    [illegible]  .41510    -.17040    -.17030     .10150  [illegible] -.01700     .01470    -.00430     .33160  [illegible]
          GRADIENT     .05699    -.02169  [illegible]   .00075    -.00233     .00053    -.00030  [illegible]   .03187  [illegible]

                                         CALSPAN T14-053     02 T1 S1     IA35                  (RUF020)     26 SEP 73

               REFERENCE DATA                                                                  PARAMETRIC DATA

SREF  =  2690.0004 FT.SQU   XMRP   =    953.0001 INCHES                          ALPHA   =        .000   MPSRA  =       .000
LREF  =  1328.0002 INCHES   YMRP   =       .0000 INCHES                          POWER   =        .000   RUDDER =       .000
BREF  =  1328.0002 INCHES   ZMRP   =    400.0000 INCHES
SCALE =        .0190

                           RUN NO.   20/ 0    RN/L =   2.81    GRADIENT INTERVAL =  -5.00/  5.00

  MACH       BETA        CN        CLMF       CLM        CAF        CA         CY         CYN        CBL        CNW        CHW
  .903      -6.080     .00180    -.03870    -.03600     .11425     .19856     .29060    -.12820     .04710     .22030    -.03530
  .900      -3.060     .00630    -.04040    -.03760     .10080     .19463     .18580    -.09420     .03130     .20100    -.02820
  .902      -2.030     .00480    -.03830    -.03570     .10992     .20255     .08550    -.03900     .01450     .18450    -.01980
  .898        .000     .00120    -.03420    -.03110     .11243     .21267    -.02740     .02050    -.00410     .13980    -.00480
  .899       3.070    -.00250    -.03530    -.03170     .10914     .20580    -.20430     .11340    -.03600     .06120     .00710
  .898       6.090    -.01630    -.02840    -.02410     .09823     .20309    -.32710     .15530    -.04740     .01870     .01900
          GRADIENT    -.00145     .00083     .00038     .00100     .00171    -.05491     .03154    -.01078    -.01981     .00542
```

```
DATE 05 NOV 75            TABULATED DATA FOR CAL T14-053 (IA36)                                           PAGE    3

                                    CALSPAN T14-053     02 T1 S1      IA36                        (RUF022)   ( 26 SEP 73  )

               REFERENCE DATA                                                                        PARAMETRIC DATA

SREF  =  2690.0004 FT.SQU   XMRP  =   953.0001 INCHES                              BETA   =      .000  MPSRA  =      .000
LREF  =  1328.0002 INCHES   YMRP  =      .0000 INCHES                              POWER  =      .000  RUDDER =      .000
BREF  =  1328.0002 INCHES   ZMRP  =   400.0000 INCHES
SCALE =       .0190

                        RUN NO.   22/ 0    RN/L =   2.17    GRADIENT INTERVAL =  -5.00/  5.00

  MACH        ALPHA       CN         CLMF        CLM         CAF         CA          CY         CYN         CBL         CNW         CHW
  1.178      -8.130    -.54840     .20770      .21280      .33084      .38602      .00220    -.00370     -.00050     -.19010     -.00270
  1.179      -6.020    -.39460     .14670      .15290      .27825      .38339      .00090    -.00300     -.00110     -.09640     -.00410
  1.177      -4.060    -.25690     .09260      .03920      .25673      .38234     -.00160    -.00100     -.00170     -.01240     -.00600
  1.176      -2.030    -.12150     .03500      .04160      .26731      .38775     -.00360     .00050     -.00190      .06760     -.00830
  1.172       -.010     .00520    -.01740     -.01090      .27231      .38649     -.00620     .00240     -.00220      .14150     -.01080
  1.172       2.050     .13390    -.06620     -.05980      .28185      .38198     -.00770     .00390     -.00250      .21940     -.01310
  1.175       4.050     .25800    -.11440     -.10740      .25975      .37266     -.01020     .00790     -.00290      .26700     -.01210
  1.176       6.020     .37480    -.15950     -.15240      .25912      .36927     -.01050     .00930     -.00360      .33590     -.01500
           GRADIENT     .06331    -.02538     -.02535      .00102     -.00124     -.00105     .00104     -.00015      .03501     -.00084

                                    CALSPAN T14-053     02 T1 S1      IA36                        (RUF023)   ( 26 SEP 73  )

               REFERENCE DATA                                                                        PARAMETRIC DATA

SREF  =  2690.0004 FT.SQU   XMRP  =   953.0001 INCHES                              ALPHA  =      .000  MPSRA  =      .000
LREF  =  1328.0002 INCHES   YMRP  =      .0000 INCHES                              POWER  =      .000  RUDDER =      .000
BREF  =  1328.0002 INCHES   ZMRP  =   400.0000 INCHES
SCALE =       .0190

                        RUN NO.   23/ 0    RN/L =   2.15    GRADIENT INTERVAL =  -5.00/  5.00

  MACH        BETA        CN         CLMF        CLM         CAF         CA          CY         CYN         CBL         CNW         CHW
  1.195      -6.080    -.00990    -.01590     -.00910      .24852      .37387      .31340    -.14200      .05370      .26540     -.02110
  1.176      -3.060    -.00820    -.01470     -.00790      .24749      .37442      .21330    -.10290      .03560      .22740     -.01720
  1.172      -2.030     .00120    -.01790     -.01100      .25245      .37623      .10960    -.05750      .01780      .19040     -.01300
  1.178        .000     .00770    -.01830     -.01160      .26519      .38439     -.00760     .00320     -.00230      .14480     -.01120
  1.172       2.030    -.00360    -.01390     -.00700      .24645      .36762     -.11590     .05790     -.02110      .06370     -.00590
  1.175       3.060    -.01040    -.01210     -.00520      .24765      .36282     -.21380     .09980     -.03900      .00010     -.00470
  1.178       6.080    -.01610    -.01140     -.00460      .25224      .36138     -.32070     .14050     -.05660     -.04300     -.00120
           GRADIENT    -.00061     .00060      .00061     -.00043     -.00211     -.06543     .03169     -.01151     -.03533      .00195
```

REPRODUCIBILITY OF THE
ORIGINAL PAGE IS POOR

```
                                    CALSPAN T14-053     02 T1 S:     IA36                          (RUF024)   ( 26 SEP 73  )

              REFERENCE DATA                                                                     PARAMETRIC DATA

SREF  =  2690.0004 FT.SQU   XMRP  =   953.0001 INCHES                               BETA   =     .000  MPSRA  =      .000
LREF  =  1328.0002 INCHES   YMRP  =      .0000 INCHES                               POWER  =    1.000  CPR    =    36.200
BREF  =  1328.0002 INCHES   ZMRP  =   400.0000 INCHES                               SRMPR  =    2.330  RUDDER =      .000
SCALE =       .0190

                          RUN NO.   24/ 0    RN/L =   2.16    GRADIENT INTERVAL =  -5.00/  5.00

  MACH       ALPHA       CN        CLMF       CLM        CAF        CA         CY        CYN        CBL        CNW        CHW
 1.137      -8.150    -.53390    .19620     .20210     .23704     .35028    -.00090    -.00400    -.00060    -.19430    -.00140
 1.312      -6.050    -.38290    .13860     .14460     .23370     .35510    -.00240    -.00260    -.00120    -.11970    -.00330
 1.191      -4.100    -.24510    .08300     .08890     .25369     .35441    -.00340    -.00100    -.00170    -.00940    -.00480
 1.199      -2.040    -.10650    .02330     .02890     .25058     .35048    -.00530     .00100    -.00190     .07400    -.00750
 1.193       -.040     .01190   -.02460    -.01860     .24730     .35213    -.01310     .00840    -.00220     .15120    -.00980
 1.196       1.950     .14400   -.07610    -.07050     .25869     .35299    -.00720     .00210    -.00180     .22200    -.01250
          GRADIENT     .06381   -.02607    -.02610     .00057    -.00013    -.00096     .00083    -.00006     .03829    -.00126

                                    CALSPAN T14-053     02 T1 S1     IA36                          (RUF025)   ( 26 SEP 73  )

              REFERENCE DATA                                                                     PARAMETRIC DATA

SREF  =  2690.0004 FT.SQU   XMRP  =   953.0001 INCHES                               ALPHA  =     .000  MPSRA  =      .000
LREF  =  1328.0002 INCHES   YMRP  =      .0000 INCHES                               POWER  =    1.000  OPR    =    36.200
BREF  =  1328.0002 INCHES   ZMRP  =   400.0000 INCHES                               SRMPR  =    2.330  RUDDER =      .000
SCALE =       .0190

                          RUN NO.   25/ 0    RN/L =   2.13    GRADIENT INTERVAL =  -5.00/  5.00

  MACH       BETA        CN        CLMF       CLM        CAF        CA         CY        CYN        CBL        CNW        CHW
 1.183      -6.080     .00040   -.02610    -.01940     .22869     .34474     .31240    -.14020     .05330     .27370    -.02120
 1.197        .000     .01540    .02550    -.02000     .24681     .35181    -.00440     .00140    -.00150     .15390    -.00970
 1.195       3.050     .00350   -.02220    -.01650     .23635     .33663    -.16260     .07740    -.02910     .03060    -.00420
 1.170       6.080    -.00910   -.01690    -.01120     .22601     .32937    -.30900     .13230    -.05450    -.03020     .00090
          GRADIENT    -.00390    .00111     .00111    -.00343    -.00498    -.05187     .02492    -.00905    -.04043     .00180
```

```
                                     CALSPAN T14-053     02 T1 S1      IA36                         (RUF026)    ( 26 SEP 73  )

               REFERENCE DATA                                                                         PARAMETRIC DATA

SREF  =  2690.0004 FT.SQU   XMRP  =   953.0001 INCHES                                   BETA   =       .000   MPSRA  =        .000
LREF  =  1328.0002 INCHES   YMRP  =      .0000 INCHES                                   POWER  =       .000   RUDDER =        .000
BREF  =  1328.0002 INCHES   ZMRP  =   400.0000 INCHES
SCALE =       .0190

                            RUN NO.   26/ 0    RN/L =    4.89    GRADIENT INTERVAL =  -5.00/  5.00

  MACH      ALPHA       CN         CLMF        CLM        CAF        CA         CY         CYN        CBL        CNW        CHW
  1.279     -8.080    -.49960     .15880     .16380     .10138     .22470    -.02440     .01690    -.00380    -.13930     .01310
  1.278     -4.010    -.22470     .05330     .05760     .11324     .22711    -.02600     .01930    -.00450     .00620     .00400
  1.280      -.020     .01570    -.04570    -.04110     .11133     .22824    -.02820     .01970    -.00400     .14110    -.00770
  1.281      3.980     .23990    -.12190    -.11770     .10791     .21793    -.02740     .01930    -.00500     .25670    -.03030
  1.281      6.020     .34090    -.15000    -.14550     .10084     .21887    -.02390     .01720    -.00560     .29810    -.04030
          GRADIENT     .05815    -.02193    -.02194    -.00067    -.00115    -.00018     .00006    -.00006     .03135    -.00429

                                     CALSPAN T14-053     02 T1 S1      IA36                         (RUF027)    ( 26 SEP 73  )

               REFERENCE DATA                                                                         PARAMETRIC DATA

SREF  =  2690.0004 FT.SQU   XMRP  =   953.0001 INCHES                                   ALPHA  =       .000   MPSRA  =        .000
LREF  =  1328.0002 INCHES   YMRP  =      .0000 INCHES                                   POWER  =       .000   RUDDER =        .000
BREF  =  1328.0002 INCHES   ZMRP  =   400.0000 INCHES
SCALE =       .0190

                            RUN NO.   27/ 0    RN/L =    4.90    GRADIENT INTERVAL =  -5.00/  5.00

  MACH      BETA        CN         CLMF        CLM        CAF        CA         CY         CYN        CBL        CNW        CHW
  1.278     -6.080     .00010    -.03830    -.03290     .10439     .21371     .29920    -.13440     .04870     .23260    -.03830
  1.285     -3.050     .01350    -.04460    -.04050     .10913     .21670     .14490    -.06730     .02450     .21150    -.02380
  1.279       .000     .02020    -.04670    -.04230     .11339     .22806    -.02480     .01780    -.00330     .15900    -.00750
  1.284      3.050     .01600    -.04560    -.04190     .11215     .22118    -.17970     .09360    -.02870     .10610     .00590
  1.281      6.090    -.00590    -.03330    -.02800     .10423     .22097    -.33490     .15990    -.05320     .05530     .02020
          GRADIENT     .00041    -.00033    -.00023     .00050     .00073    -.05321     .02638    -.00872    -.01728     .00487
```

```
                                 CALSPAN T14-053     02 T1 S1     IA36                        (RUF028)   ( 26 SEP 73  )

              REFERENCE DATA                                                                  PARAMETRIC DATA

SREF  =  2690.0004 FT.SQU    XMRP  =    953.0001 INCHES                          BETA   =      .000   MPSRA  =      .000
LREF  =  1328.0002 INCHES    YMRP  =       .0000 INCHES                          POWER  =     1.000   OPR    =    28.310
BREF  =  1328.0002 INCHES    ZMRP  =    400.0000 INCHES                          SRMPR  =     2.020   RUDDER =      .000
SCALE =       .0190

                         RUN NO.   28/ 0    RN/L =    4.72    GRADIENT INTERVAL =  -5.00/  5.00

   MACH      ALPHA       CN        CLMF       CLM        CAF        CA         CY         CYN        CBL        CNW        CHW
   1.286     -8.110   -.48600     .16060     .16680     .12224     .25147    -.02650     .01680    -.00360    -.14320     .01330
   1.289     -4.070   -.22520     .05690     .06280     .13834     .25387    -.02980     .02040    -.00450     .00900     .00430
   1.276      -.020    .02370    -.04700    -.04150     .14103     .25323    -.03150     .02100    -.00420     .15190    -.00370
   1.296      4.000    .24550    -.12460    -.11940     .12787     .23904    -.02790     .01880    -.00480     .26340    -.02940
   1.278      5.980    .34680    -.15250    -.14660     .12746     .24919    -.02550     .01770    -.00570     .30800    -.04100
           GRADIENT    .05833    -.02249    -.02258    -.00129    -.00184     .00023    -.00020    -.00004     .03153    -.00417

                                 CALSPAN T14-053     02 T1 S1     IA36                        (RUF029)   ( 26 SEP 73  )

              REFERENCE DATA                                                                  PARAMETRIC DATA

SREF  =  2690.0004 FT.SQU    XMRP  =    953.0001 INCHES                          ALPHA  =      .000   MPSRA  =      .000
LREF  =  1328.0002 INCHES    YMRP  =       .0000 INCHES                          POWER  =     1.000   OPR    =    28.310
BREF  =  1328.0002 INCHES    ZMRP  =    400.0000 INCHES                          SRMPR  =     2.020   RUDDER =      .000
SCALE =       .0190

                         RUN NO.   29/ 0    RN/L =    4.15    GRADIENT INTERVAL =  -5.00/  5.00

   MACH      BETA        CN        CLMF       CLM        CAF        CA         CY         CYN        CBL        CNW        CHW
   1.300     -6.080    .00090    -.03530    -.02950     .11950     .24182     .29860    -.13490     .04670     .22400    -.04070
   1.272     -3.050    .01550    -.04390    -.03850     .12910     .24750     .14810    -.07150     .02450     .20750    -.02500
   1.286       .000    .02040    -.04390    -.03820     .13266     .25374    -.02610     .01840    -.00350     .15810    -.00830
   1.283      3.060    .01410    -.04290    -.03690     .13195     .24427    -.18330     .09470    -.02890     .11040     .00600
   1.174      6.090   -.00020    -.03470    -.02840     .11969     .23934    -.33860     .16130    -.05290     .05350     .02040
           GRADIENT   -.00025     .00016     .00026     .00047    -.00053    -.05424     .02720    -.00874    -.01589     .00507
```

```
                                     CALSPAN T14-053     02 T1 S1      IA36                        (RUF030)   ( 26 SEP 73  )

                 REFERENCE DATA                                                                       PARAMETRIC DATA

SREF  =  2690.0004 FT.SQU    XMRP  =    953.0001 INCHES                              BETA   =       .000   MPSRA  =     30.000
LREF  =  1328.0002 INCHES    YMRP  =       .0000 INCHES                              POWER  =       .000   RUDDER =       .000
BREF  =  1328.0002 INCHES    ZMRP  =    400.0000 INCHES
SCALE =       .0190

                          RUN NO.   30/ 0    RN/L =   2.12    GRADIENT INTERVAL =  -5.00/  5.00

   MACH        ALPHA       CN         CLMF        CLM         CAF        CA          CY          CYN         CBL         CNW        CHW
   1.205      -8.100    -.54750      .20760      .21360     .28243     .38481     -.00020     -.00300     -.00160     -.20270    -.00250
   1.178      -4.030    -.25470      .09320      .09920     .27287     .38562     -.00430     -.00040     -.00300     -.02940    -.00590
   1.205       3.980     .24900     -.11010     -.10360     .27519     .36832     -.01810      .01480     -.00530      .24410    -.01220
   1.206       6.010     .37280     -.15810     -.15190     .24888     .36078     -.01200      .01060     -.00520      .31060    -.01470
            GRADIENT     .06288     -.02538     -.02532     .00029    -.00216     -.00172      .00190     -.00029      .03414    -.00079

                                     CALSPAN T14-053     02 T1 S1      IA3E                        (RUF031)   ( 26 SEP 73  )

                 REFERENCE DATA                                                                       PARAMETRIC DATA

SREF  =  2690.0004 FT.SQU    XMRP  =    953.0001 INCHES                              ALPHA  =       .000   MPSRA  =     30.000
LREF  =  1328.0002 INCHES    YMRP  =       .0000 INCHES                              POWER  =       .000   RUDDER =       .000
BREF  =  1328.0002 INCHES    ZMRP  =    400.0000 INCHES
SCALE =       .0190

                          RUN NO.   31/ 0    RN/L =   2.10    GRADIENT INTERVAL =  -5.00/  5.00

   MACH        BETA        CN         CLMF        CLM         CAF        CA          CY          CYN         CBL         CNW        CHW
   1.204      -6.080    -.00890     -.01480     -.00860     .24390     .36765      .31000     -.14220      .05270      .26520    -.02140
   1.204      -3.050    -.00360     -.01470     -.00860     .24067     .36892      .16500     -.08310      .02710      .21290    -.01570
   1.203        .000     .00910     -.01810     -.01210     .25048     .37774     -.00440      .00060     -.00300      .14090    -.01140
   1.203       3.050    -.00560     -.01240     -.00640     .23782     .35877     -.16140      .07600     -.03060      .02760    -.00580
   1.202       6.080    -.01410     -.01100     -.00450     .23677     .35621     -.31810      .13860     -.05750     -.04550    -.00080
            GRADIENT    -.00033      .00038      .00036    -.00047    -.00166     -.05351      .02621     -.00946     -.03038     .00162
```

```
                                CALSPAN T14-053     02 T1 S1     IA36                        (RUF033)   ( 26 SEP 73  )

            REFERENCE DATA                                                                PARAMETRIC DATA

SREF  =  2690.0004 FT.SQU   XMRP  =   953.0001 INCHES                          ALPHA  =      .000   MPSRA  =    30.000
LREF  =  1328.0002 INCHES   YMRP  =      .0000 INCHES                          POWER  =     1.000   OPR    =    36.200
BREF  =  1328.0002 INCHES   ZMRP  =   400.0000 INCHES                          SRMPR  =     2.330   RUDDER =      .000
SCALE =      .0190

                         RUN NO.   33/ 0   RN/L =   2.12   GRADIENT INTERVAL =  -5.00/  5.00

  MACH       BETA       CN        CLMF       CLM        CAF        CA         CY         CYN        CBL        CNW        CHW
  1.197     -6.080   -.00110   -.02240   -.01550    .24188     .35251     .30960    -.14000     .05230     .27800    -.02140
  1.200     -3.040    .00990   -.02500   -.01870    .25102     .35703     .16260    -.08180     .02640     .22480    -.01510
  1.198       .000    .02180   -.02780   -.02190    .25852     .36193    -.00620     .00190    -.00250     .14950    -.01080
  1.195      3.050    .00010   -.01740   -.01150    .24389     .34050    -.16450     .07690    -.03050     .03070    -.00450
  1.205      6.080   -.00590   -.01760   -.01170    .24039     .33922    -.31440     .13510    -.05620    -.02870     .00020
          GRADIENT   -.00161    .00125    .00118   -.00117    -.00272    -.05371     .02606    -.00934    -.03188     .00174

                                CALSPAN T14-053     02 T1 S1     IA36                        (RUF034)   ( 26 SEP 73  )

            REFERENCE DATA                                                                PARAMETRIC DATA

SREF  =  2690.0004 FT.SQU   XMRP  =   953.0001 INCHES                          BETA   =      .000   MPSRA  =    30.000
LREF  =  1328.0002 INCHES   YMRP  =      .0000 INCHES                          POWER  =     1.000   OPR    =    36.200
BREF  =  1328.0002 INCHES   ZMRP  =   400.0000 INCHES                          SRMPR  =     2.330   RUDDER =      .000
SCALE =      .0190

                         RUN NO.   34/ 0   RN/L =   2.02   GRADIENT INTERVAL =  -5.00/  5.00

  MACH      ALPHA       CN        CLMF       CLM        CAF        CA         CY         CYN        CBL        CNW        CHW
  1.198     -8.180   -.53310    .19800    .20370    .24259     .35828    -.00380    -.00180    -.00170    -.20680    -.00190
  1.197     -4.140   -.24310    .08500    .09050    .25326     .35672    -.01170     .00330    -.00300    -.02850    -.00500
  1.194      -.050    .01610   -.02390   -.01800    .25710     .35869    -.02110     .01360    -.00440     .14320    -.01080
   .758      3.980    .26150   -.11760   -.11160    .25588     .34304    -.01470     .01170    -.00420     .27270    -.01130
  1.202      6.040    .38190   -.16400   -.15820    .25282     .33536    -.00700     .00570    -.00390     .34670    -.01360
          GRADIENT    .06215   -.02495   -.02489    .00032    -.00168    -.00037     .00104    -.00015     .03711    -.00078
```

```
DATE 05 NOV 75            TABULATED DATA FOR CAL T14-053 (IA36)                                                    PAGE    9

                                       CALSPAN T14-053      02 T1 S1      IA36                            (RUF035)   ( 26 SEP 73  )

              REFERENCE DATA                                                                               PARAMETRIC DATA

SREF  =  2690.0004 FT.SQU   XMRP  =   953.0001 INCHES                                          BETA   =        .000  MPSRA  =    30.000
LREF  =  1328.0002 INCHES   YMRP  =      .0000 INCHES                                          POWER  =        .000  RUDDER =      .000
BREF  =  1328.0002 INCHES   ZMRP  =   400.0000 INCHES
SCALE =        .0190

                         RUN NO.   35/ 0    RN/L =   2.76    GRADIENT INTERVAL =  -5.00/  5.00

   MACH      ALPHA       CN         CLMF        CLM         CAF         CA          CY          CYN         CBL         CNW         CHW
   .900     -8.110    -.49160      .16150      .16600      .10660      .22249     -.02460      .01720     -.00410     -.14390      .01220
   .899     -4.060    -.23170      .05890      .06310      .11430      .22373     -.03410      .02300     -.00610      .00430      .00280
   .901       .010     .02040     -.04530     -.04150      .11482      .22103     -.03090      .02120     -.00520      .13980     -.00900
   .899      4.030     .24480     -.12270     -.11890      .11200      .20569     -.03030      .02120     -.00670      .25590     -.03070
   .902      6.000     .33510     -.14650     -.14300      .11077      .20400     -.02540      .01770     -.00690      .29790     -.04070
          GRADIENT     .05891     -.02245     -.02250     -.00028     -.00223      .00047     -.00022     -.00007      .03110     -.00414

                                       CALSPAN T14-053      02 T1 S1      IA36                            (RUF036)   ( 26 SEP 73  )

              REFERENCE DATA                                                                               PARAMETRIC DATA

SREF  =  2690.0004 FT.SQU   XMRP  =   953.0001 INCHES                                          BETA   =        .000  MPSRA  =    30.000
LREF  =  1328.0002 INCHES   YMRP  =      .0000 INCHES                                          POWER  =       1.000  OPR    =    28.310
BREF  =  1328.0002 INCHES   ZMRP  =   400.0000 INCHES                                          SRMPR  =       2.020  RUDDER =      .000
SCALE =        .0190

                         RUN NO.   36/ 0    RN/L =   2.70    GRADIENT INTERVAL =  -5.00/  5.00

   MACH      ALPHA       CN         CLMF        CLM         CAF         CA          CY          CYN         CBL         CNW         CHW
   .899     -8.120    -.48980      .16350      .16990      .11586      .25089     -.03200      .02000     -.00490     -.15080      .01240
   .898     -4.040    -.22620      .05840      .06430      .12797      .24206     -.03330      .02240     -.00570     -.00370      .00280
   .902       .030     .01850     -.04130     -.03560      .13151      .23651     -.03110      .02080     -.00490      .14510     -.00770
   .908      4.000     .24840     -.12600     -.12060      .13021      .22691     -.02830      .01900     -.00620      .25730     -.03110
   .901      6.020     .34360     -.15110     -.14560      .12438      .22584     -.02330      .01630     -.00610      .29420     -.04100
          GRADIENT     .05903     -.02294     -.02300      .00028     -.00188      .00062     -.00042     -.00006      .03248     -.00421
```

```
DATE 05 NOV 75            TABULATED DATA FOR CAL T14-053 (IA36)                                                              PAGE   10

                                        CALSPAN T14-053      02 T1 S1      IA36                        (RUF037)   ( 26 SEP 73  )

          REFERENCE DATA                                                                             PARAMETRIC DATA

SREF  =  2690.0004 FT.SQU   XMRP  =   953.0001 INCHES                                  ALPHA  =      .000   MPSRA  =    30.000
LREF  =  1328.0002 INCHES   YMRP  =      .0000 INCHES                                  POWER  =     1.000   OPR    =    28.310
BREF  =  1328.0002 INCHES   ZMRP  =   400.0000 INCHES                                  SRMPR  =     2.020   RUDDER =      .000
SCALE =       .0190

                           RUN NO.   37/ 0    RN/L =   2.72    GRADIENT INTERVAL =  -5.00/  5.00

   MACH      BETA        CN        CLMF        CLM         CAF        CA          CY         CYN         CBL         CNW        CHW
   .897     -6.080     .00000    -.03440    -.02900     .12441     .22258     .29920    -.13390     .04650     .22310    -.04230
   .900     -3.050     .01270    -.04050    -.03530     .12932     .22943     .14540    -.06900     .02380     .20050    -.02670
   .901       .000     .01520    -.03960    -.03400     .13224     .23850    -.02800     .01960    -.00450     .14510    -.00920
   .897      3.050     .01590    -.04280    -.03670     .12437     .22785    -.18580     .09770    -.03080     .11380     .00470
   .899      6.090     .00390    -.03450    -.02810     .12705     .22853    -.34160     .16280    -.05490     .05320     .02040
           GRADIENT    .00052    -.00038    -.00023    -.00081    -.00026    -.05430     .02733    -.00895    -.01421     .00515

                                        CALSPAN T14-053      02 T1 S1      IA36                        (RUF038)   ( 26 SEP 73  )

          REFERENCE DATA                                                                             PARAMETRIC DATA

SREF  =  2690.0004 FT.SQU   XMRP  =   953.0001 INCHES                                  ALPHA  =      .000   MPSRA  =    30.000
LREF  =  1328.0002 INCHES   YMRP  =      .0000 INCHES                                  POWER  =      .000   RUDDER =      .000
BREF  =  1328.0002 INCHES   ZMRP  =   400.0000 INCHES
SCALE =       .0190

                           RUN NO.   38/ 0    RN/L =   2.75    GRADIENT INTERVAL =  -5.00/  5.00

   MACH      BETA        CN        CLMF        CLM         CAF        CA          CY         CYN         CBL         CNW        CHW
   .904     -6.080     .00860    -.04060    -.03690     .11432     .20466     .29900    -.13430     .04850     .22770    -.04020
   .900     -3.050     .01960    -.04470    -.04150     .12095     .20439     .14510    -.06750     .02430     .20440    -.02530
   .901       .000     .02110    -.04410    -.04030     .13222     .22470    -.02750     .01920    -.00420     .14460    -.00850
   .901      3.050     .01440    -.04340    -.03910     .12740     .21479    -.18080     .09410    -.02970     .10940     .00560
   .901      6.090    -.00070    -.03250    -.02730     .12536     .21297    -.33580     .16020    -.05440     .05710     .01960
           GRADIENT   -.00085     .00021     .00039     .00106     .00170    -.05343     .02649    -.00885    -.01557     .00507
```

CALSPAN T14-053 02 T1 S1 IA36 (RUF040) (26 SEP 73)

REFERENCE DATA

SREF = 2690.0004 FT.SQU XMRP = 953.0001 INCHES
LREF = 1328.0002 INCHES YMRP = .0000 INCHES
BREF = 1328.0002 INCHES ZMRP = 400.0000 INCHES
SCALE = .0190

PARAMETRIC DATA

BETA = .000 MPSRA = 60.000
POWER = .000 RUDDER = .000

RUN NO. 40/ 0 RN/L = 2.13 GRADIENT INTERVAL = -5.00/ 5.00

MACH	ALPHA	CN	CLMF	CLM	CAF	CA	CY	CYN	CBL	CNW	CHW
1.203	-8.090	-.58200	.22030	.22600	.23634	.37003	.00130	-.00380	-.00150	-.21690	-.00260
1.204	-4.020	-.26990	.09910	.10470	.25467	.37846	-.00350	-.00090	-.00300	-.03130	-.00600
1.205	-.020	.00930	-.01800	-.01240	.25887	.37919	-.00810	.00250	-.00360	.13820	-.01120
1.203	4.010	.26750	-.11660	-.11080	.25433	.36517	-.01690	.01370	-.00500	.27400	-.01250
1.204	6.020	.39550	-.16730	-.16110	.25224	.36333	-.01010	.00930	-.00500	.34550	-.01520
	GRADIENT	.06692	-.02686	-.02683	-.00004	-.00166	-.00167	.00182	-.00025	.03801	-.00081

CALSPAN T14-053 02 T1 S1 IA36 (RUF041) (26 SEP 73)

REFERENCE DATA

SREF = 2690.0004 FT.SQU XMRP = 953.0001 INCHES
LREF = 1328.0002 INCHES YMRP = .0000 INCHES
BREF = 1328.0002 INCHES ZMRP = 400.0000 INCHES
SCALE = .0190

PARAMETRIC DATA

ALPHA = .000 MPSRA = 60.000
POWER = .000 RUDDER = .000

RUN NO. 41/ 0 RN/L = 2.12 GRADIENT INTERVAL = -5.00/ 5.00

MACH	BETA	CN	CLMF	CLM	CAF	CA	CY	CYN	CBL	CNW	CHW
1.201	-6.080	-.01070	-.01480	-.00900	.28173	.37644	.31320	-.14270	.05380	.26680	-.02110
1.201	-3.050	-.00120	-.01610	-.01020	.27536	.37593	.16390	-.08240	.02710	.21220	-.01550
1.202	3.050	-.00810	-.01190	-.00590	.28623	.35930	-.16470	.07820	-.03110	.03110	-.00560
1.202	6.080	-.01150	-.01330	-.00690	.26060	.36239	-.31940	.13870	-.05770	-.03920	-.00080
	GRADIENT	-.00113	.00069	.00070	.00178	-.00109	-.05[illegible]7	.02633	-.00954	-.02969	.00162

```
DATE 05 NOV 75          TABULATED DATA FOR CAL T14-053 (IA36)                                                   PAGE   12

                                   CALSPAN T14-053      02 TI SI       IA36                          (RUF042)    ( 26 SEP 73  )

           REFERENCE DATA                                                                              PARAMETRIC DATA

SREF  =  2690.0004 FT.SQU   XMRP  =    953.0001 INCHES                                     BETA    =       .000   MPSRA  =     60.000
LREF  =  1328.0002 INCHES   YMRP  =       .0000 INCHES                                     POWER   =      1.000   OPR    =     36.200
BREF  =  1328.0002 INCHES   ZMRP  =    400.0000 INCHES                                     SRMPR   =      2.330   RUDDER =       .000
SCALE =       .0190

                           RUN NO.   42/ 0    RN/L =    2.04    GRADIENT INTERVAL =  -5.00/  5.00

   MACH      ALPHA       CN        CLMF        CLM        CAF         CA          CY         CYN         CBL         CNW         CHW
   1.201    -8.090    -.52400     .19730     .20270     .27508     .36291    -.00270    -.00320    -.00170    -.19950    -.00160
   1.196    -4.070    -.24090     .08370     .08920     .26357     .36098    -.00900     .00160    -.00290    -.02300    -.00510
   1.194     -.050     .01340    -.02400    -.01850     .26973     .35950    -.01090     .00410    -.00310     .14090    -.01040
   1.199     4.030     .24610    -.11010    -.10450     .26318     .34340    -.01690     .01300    -.00450     .25370    -.01140
   1.201     5.990     .36240    -.15530    -.14980     .26206     .33521    -.00880     .00640    -.00410     .33040    -.01340
           GRADIENT    .06012    -.02392    -.02391    -.00005    -.00217    -.00098     .00141    -.00020     .03414    -.00078

                                   CALSPAN T14-053      02 TI SI       IA36                          (RUF043)    ( 26 SEP 73  )

           REFERENCE DATA                                                                              PARAMETRIC DATA

SREF  =  2690.0004 FT.SQU   XMRP  =    953.0001 INCHES                                     ALPHA   =       .000   MPSRA  =     60.000
LREF  =  1328.0002 INCHES   YMRP  =       .0000 INCHES                                     POWER   =      1.000   OPR    =     36.200
BREF  =  1328.0002 INCHES   ZMRP  =    400.0000 INCHES                                     SRMPR   =      2.330   RUDDER =       .000
SCALE =       .0190

                           RUN NO.   43/ 0    RN/L =    2.05    GRADIENT INTERVAL =  -5.00/  5.00

   MACH      BETA        CN        CLMF        CLM        CAF         CA          CY         CYN         CBL         CNW         CHW
   1.194    -6.070     .00070    -.02240    -.01610     .24355     .35042     .30510    -.13820     .05250     .27280    -.02160
   1.194    -3.050     .00850    -.02290    -.01680     .25447     .35750     .16080    -.08060     .02660     .22070    -.01540
   1.194      .000     .01650    -.02140    -.01890     .26496     .35907    -.00660     .00180    -.00250     .15020    -.01040
   1.193     3.050     .00160    -.01130    -.01380     .24921     .34083    -.16710     .07780    -.03060     .02420    -.00440
   1.196     6.080    -.00550    -.01610    -.01250     .24589     .33661    -.31290     .13380    -.05580    -.03800     .00130
           GRADIENT   -.00113     .00059     .00049    -.00086    -.00273    -.05375     .02597    -.00938    -.03221     .00130
```

```
                                CALSPAN T14-053     02 T1 S1     IA36                    (RUF044)   ( 26 SEP 73  )

              REFERENCE DATA                                                          PARAMETRIC DATA

SREF  =  2690.0004 FT.SQU   XMRP  =   953.0001 INCHES                        BETA   =     .000   MPSRA  =    60.000
LREF  =  1328.0002 INCHES   YMRP  =      .0000 INCHES                        POWER  =    1.000   OPR    =    28.310
BREF  =  1328.0002 INCHES   ZMRP  =   400.0000 INCHES                        SRMPR  =    2.020   RUDDER =      .000
SCALE =       .0190

                        RUN NO.   44/ 0   RN/L =   2.68   GRADIENT INTERVAL =  -5.00/  5.00

  MACH     ALPHA      CN        CLMF      CLM       CAF       CA        CY        CYN       CBL       CNW       CHW
  .900    -8.080   -.47640    .15770    .16420    .11216    .24671   -.02800    .01800   -.00440   -.14980    .01240
  .895    -4.050   -.22400    .05870    .06480    .11809    .23649   -.03270    .02170   -.00550   -.00600    .00160
  .898     -.040    .01960   -.04380   -.03830    .12531    .23276   -.03200    .02160   -.00510    .13810   -.00780
  .896     3.970    .24350   -.12460   -.11920    .12371    .22237   -.02930    .01970   -.00630    .24710   -.03160
  .907     6.010    .34170   -.15280   -.14770    .13446    .22332   -.02270    .01510   -.00640    .28160   -.04090
        GRADIENT    .05829   -.02286   -.02294    .00070   -.00176    .00042   -.00025   -.00010    .03156   -.00414

                                CALSPAN T14-053     02 T1 S1     IA36                    (RUF045)   ( 26 SEP 73  )

              REFERENCE DATA                                                          PARAMETRIC DATA

SREF  =  2690.0004 FT.SQU   XMRP  =   953.0001 INCHES                        ALPHA  =     .000   MPSRA  =    60.000
LREF  =  1328.0002 INCHES   YMRP  =      .0000 INCHES                        POWER  =    1.000   OPR    =    28.310
BREF  =  1328.0002 INCHES   ZMRP  =   400.0000 INCHES                        SRMPR  =    2.020   RUDDER =      .000
SCALE =       .0190

                        RUN NO.   45/ 0   RN/L =   2.73   GRADIENT INTERVAL =  -5.00/  5.00

  MACH     BETA       CN        CLMF      CLM       CAF       CA        CY        CYN       CBL       CNW       CHW
  .897    -6.080   -.00390   -.03320   -.02780    .12110    .22688    .29770   -.13210    .04620    .20680   -.04160
  .899    -3.050    .01210   -.04100   -.03580    .12745    .23436    .14620   -.06890    .02390    .19720   -.02670
  .898      .000    .01740   -.04440   -.03890    .12981    .23749   -.02780    .01910   -.00430    .14260   -.00840
  .898     3.050    .01340   -.04350   -.03740    .12725    .22873   -.18700    .03760   -.03050    .10680    .00640
  .900     5.090   -.00750   -.02320   -.02270    .12635    .23009   -.34060    .15170   -.05430    .04420    .02170
        GRADIENT    .00021   -.00041   -.00026   -.00003   -.00092   -.05462    .02730   -.00892   -.01482    .00543
```

```
DATE 05 NOV 75            TABULATED DATA FOR CAL T14-053 (IA36)                                                             PAGE   14

                                        CALSPAN T14-053      02 T1 S1      IA36                              (RUF046)    ( 26 SEP 73   )

                REFERENCE DATA                                                                              PARAMETRIC DATA

SREF  =  2690.0004 FT.SQU    XMRP  =    953.0001 INCHES                                     ALPHA  =        .000   MPSRA  =     60.000
LREF  =  1328.0002 INCHES    YMRP  =       .0000 INCHES                                     POWER  =        .000   RUDDER =       .000
BREF  =  1328.0002 INCHES    ZMRP  =    400.0000 INCHES
SCALE =       .0190

                             RUN NO.   46/ 0     RN/L =    2.77     GRADIENT INTERVAL =  -5.00/  5.00

  MACH       BETA        CN         CLMF        CLM         CAF         CA          CY          CYN         CBL         CNW         CHW
  .898     -6.080      .00110    -.03870     -.03420      .10510      .20249      .29890    -.13400      .04860      .21600    -.04000
  .902     -3.050      .01110    -.04170     -.03790      .11995      .21311      .14290    -.06660      .02390      .20040    -.02460
  .899       .000      .01700    -.04400     -.03970      .11635      .22002     -.02690     .01870     -.00420      .14700    -.00830
  .901      3.060      .01320    -.04370     -.03950      .12245      .21867     -.18440     .09520     -.03010      .10840     .00650
  .900      6.090     -.00590    -.03100     -.02610      .11455      .21607     -.33960     .15150     -.05470      .05620     .02050
         GRADIENT      .00034    -.00033     -.00026      .00041      .00091     -.05357     .02648     -.00884     -.01506     .00511

                                        CALSPAN T14-053      02 T1 S1      IA36                              (RUF047)    ( 26 SEP 73   )

                REFERENCE DATA                                                                              PARAMETRIC DATA

SREF  =  2690.0004 FT.SQU    XMRP  =    953.0001 INCHES                                     BETA   =        .000   MPSRA  =     60.000
LREF  =  1328.0002 INCHES    YMRP  =       .0000 INCHES                                     POWER  =        .000   RUDDER =       .000
BREF  =  1328.0002 INCHES    ZMRP  =    400.0000 INCHES
SCALE =       .0190

                             RUN NO.   47/ 0     RN/L =    2.75     GRADIENT INTERVAL =  -5.00/  5.00

  MACH      ALPHA        CN         CLMF        CLM         CAF         CA          CY          CYN         CBL         CNW         CHW
  .902     -8.070     -.47350      .15470      .15890      .11613      .22474     -.02960      .01940     -.00480     -.13670      .01300
  .900     -4.090     -.22840      .05730      .06150      .11660      .22215     -.03380      .02300     -.00500     -.00130      .00380
  .899       .050      .02000     -.04510     -.04110      .11799      .21703     -.03400      .02270     -.00550      .14210     -.00600
  .897      4.010      .23590     -.11930     -.11540      .11140      .20676     -.03380      .02240     -.00700      .24950     -.03040
  .900      5.980      .32450     -.14320     -.13940      .11536      .20759     -.02760      .01850     -.00730      .28400     -.04040
         GRADIENT      .05734     -.02182     -.02186     -.00063     -.00189     -.00000     -.00007     -.00012      03099     -.00421
```

ORIGINAL PAGE IS POOR

```
                                      CALSPAN T14-053      02 T1 S1      IA36                           (RUF048)    ( 26 SEP 73  )

                  REFERENCE DATA                                                                            PARAMETRIC DATA

SREF   =  2690.0004 FT.SQU   XMRP   =   953.0001 INCHES                                        BETA    =       .000   MPSRA  =     90.000
LREF   =  1328.0002 INCHES   YMRP   =      .0000 INCHES                                        POWER   =       .000   RUDDER =       .000
BREF   =  1328.0002 INCHES   ZMRP   =   400.0000 INCHES
SCALE  =       .0190

                         RUN NO.   48/ 0    RN/L  =   2.13    GRADIENT INTERVAL  =  -5.00/  5.00

   MACH       ALPHA        CN        CLMF       CLM        CAF        CA         CY         CYN        CBL        CNW        CHW
   1.200      -8.010    -.53290     .20240     .20810     .29309     .39009    -.00100    -.00360    -.00140    -.19120    -.00290
   1.200      -4.060    -.24920     .09120     .09700     .30708     .39507    -.00740     .00020    -.00310    -.01630    -.00610
   1.201       -.020     .00820    -.01710    -.01120     .30390     .39273    -.00980     .00260    -.00320     .13710    -.01100
   1.202       4.010     .24640    -.10830    -.10220     .30095     .37804    -.01670     .01310    -.00470     .25750    -.01170
   1.200       6.010     .36290    -.15450    -.14780     .29764     .37202    -.01140     .00980    -.00470     .32270    -.01460
            GRADIENT     .06141    -.02472    -.02468    -.00076    -.00211    -.00115     .00160    -.00020     .03393    -.00359

                                      CALSPAN T14-053      02 T1 S1      IA36                           (RUF049)    ( 26 SEP 73

                  REFERENCE DATA                                                                            PARAMETRIC DATA

SREF   =  2690.0004 FT.SQU   XMRP   =   953.0001 INCHES                                        ALPHA   =       .000   MPSRA  =     90.000
LREF   =  1328.0002 INCHES   YMRP   =      .0000 INCHES                                        POWER   =       .000   RUDDER =       .000
BREF   =  1328.0002 INCHES   ZMRP   =   400.0000 INCHES
SCALE  =       .0190

                         RUN NO.   49/ 0    RN/L  =   2.12    GRADIENT INTERVAL  =  -5.00/  5.00

   MACH       BETA         CN        CLMF       CLM        CAF        CA         CY         CYN        CBL        CNW        CHW
   1.201      -5.080    -.01040    -.01170    -.00580     .28306     .37821     .31390    -.14510     .05200     .26120    -.02140
   1.202      -3.050    -.00370    -.01200    -.00610     .28721     .38047     .16400    -.08260     .02670     .20380    -.01560
   1.205        .000     .00760    -.01600    -.01000     .28689     .38674    -.00180    -.00040    -.00250     .13830    -.01180
   1.199       3.050    -.00940    -.00680    -.00250     .28196     .37049    -.16110     .07750    -.03010     .03290    -.00570
   1.201       6.080    -.01780    -.00750    -.00090     .26416     .36428    -.31330     .13840    -.05620    -.04180    -.00150
            GRADIENT    -.00077     .00052     .00059    -.00086    -.00164    -.05330     .02625    -.00931    -.02802     .00162
```

```
DATE 05 NOV 75          TABULATED DATA FOR CAL T14-053 (IA36)                                                          PAGE   :E

                                          CALSPAN T14-053     02 T1 S1     IA36                      (RUF050)    ( 26 SEP 73  )

              REFERENCE DATA                                                                       PARAMETRIC DATA

SREF  =  2690.0004 FT.SQU   XMRP  =    953.0001 INCHES                                  BETA    =      .000   MPSRA   =    90.000
LREF  =  1328.0002 INCHES   YMRP  =       .0000 INCHES                                  POWER   =     1.000   OPR     =    36.200
BREF  =  1328.0002 INCHES   ZMRP  =    400.0000 INCHES                                  SRMPR   =     2.330   RUDDER  =      .000
SCALE =       .0190

                              RUN NO.   50/ 0    RN/L =   2.04    GRADIENT INTERVAL =  -5.00/  5.00

  MACH       ALPHA        CN         CLMF        CLM         CAF         CA          CY          CYN         CBL         CNW         CHW
  1.193     -8.100     -.51300      .19030      .19530      .25399      .36025     -.00270     -.00400     -.00150     -.19560     -.00170
  1.198     -4.070     -.23800      .08720      .03250      27509      .36273     -.00390     -.00200     -.00250     -.01450     -.00510
  1.201      -.040      .01360     -.01900     -.01390      .28525      .35539     -.00930      .00170     -.00270      .13980     -.00980
  1.192      3.970      .26010     -.11850     -.11260      .25749      .34291     -.00870      .00440     -.00290      .25860     -.01190
  1.190      6.020      .37060     -.16000     -.15430      .25693      .33343     -.01110      .00960     -.00410      .32910     -.01320
          GRADIENT      .06195     -.02559     -.02551     -.00219     -.00246     -.00060      .00080     -.00005      .03397     -.00085

                                          CALSPAN T14-053     02 T1 S1     IA36                      (RUF051)    ( 26 SEP 73

              REFERENCE DATA                                                                       PARAMETRIC DATA

SREF  =  2690.0004 FT.SQU   XMRP  =    953.0001 INCHES                                  ALPHA   =      .000   MPSRA   =    90.000
LREF  =  1328.0002 INCHES   YMRP  =       .0000 INCHES                                  POWER   =     1.000   OPR     =    36.200
BREF  =  1328.0002 INCHES   ZMRP  =    400.0000 INCHES                                  SRMPR   =     2.330   RUDDER  =      .000
SCALE =       .0190

                              RUN NO.   51/ 0    RN/L =   2.00    GRADIENT INTERVAL =  -5.00/  5.00

  MACH       BETA         CN         CLMF        CLM         CAF         CA          CY          CYN         CBL         CNW         CHW
  1.190     -6.070     -.00480     -.01890     -.01300      .24557      .34880      .30940     -.14080      .05290      .27830     -.02170
  1.182     -3.040      .00910     -.02510     -.01910      .24616      .35205      .16190     -.08140      .02680      .21970     -.01560
  1.190       .000      .01760      .02560     -.02010      .26740      .35966     -.00570      .00070     -.00200      .14640     -.01060
  1.188      3.050      .00150     -.02040     -.01460      .24491      .34135     -.16550      .07690     -.02980      .02520     -.00420
  1.195      6.080     -.00660     -.01720     -.01170      .24253      .33859     -.31570      .13450     -.05560     -.03370      .00120
          GRADIENT     -.00125      .00077      .00074     -.00021     -.00175     -.05376      .02599     -.00929     -.03145      .00167
```

```
                                  CALSPAN T14-053      02 T1 S1      IA36                    (RUF052)   ( 26 SEP 73  )

              REFERENCE DATA                                                               PARAMETRIC DATA

SREF  =  2690.0004 FT.SQU   XMRP  =   953.0001 INCHES                         BETA   =     .000   MPSRA  =    90.000
LREF  =  1328.0002 INCHES   YMRP  =      .0000 INCHES                         POWER  =     .000   RUDDER =      .000
BREF  =  1328.0002 INCHES   ZMRP  =   400.0000 INCHES
SCALE =       .0190

                           RUN NO.   52/ 0    RN/L =   2.74    GRADIENT INTERVAL =  -5.00/  5.00

  MACH      ALPHA       CN        CLMF       CLM        CAF        CA         CY         CYN        CBL        CNW        CHW
  .916     -8.090    -.47580     .15370     .15890     .10302     .22667    -.02370     .01610    -.00390    -.13430     .01180
  .901     -4.040    -.22210     .05350     .05800     .11501     .22790    -.02840     .01960    -.00520     .00610     .00380
  .901       .000     .02130    -.04690    -.04260     .11114     .22253    -.02850     .01900    -.00450     .14380    -.00940
  .903      4.000     .23690    -.12070    -.11670     .11225     .20847    -.02760     .01830    -.00600     .25390    -.03040
  .915      5.990     .32860    -.14550    -.14150     .10361     .20459    -.02370     .01570    -.00680     .28600    -.04070
          GRADIENT    .05709    -.02167    -.02173    -.00034    -.00241     .00010    -.00016    -.00010     .03083    -.00425

                                  CALSPAN T14-053      02 T1 S1      IA35                    (RUF053)   ( 26 SEP 73  )

              REFERENCE DATA                                                               PARAMETRIC DATA

SREF  =  2690.0004 FT.SQU   XMRP  =   953.0001 INCHES                         ALPHA  =     .000   MPSRA  =    90.000
LREF  =  1328.0002 INCHES   YMRP  =      .0000 INCHES                         POWER  =     .000   RUDDER =      .000
BREF  =  1328.0002 INCHES   ZMRP  =   400.0000 INCHES
SCALE =       .0190

                           RUN NO.   53/ 0    RN/L =   2.72    GRADIENT INTERVAL =  -5.00/  5.00

  MACH      BETA        CN        CLMF       CLM        CAF        CA         CY         CYN        CBL        CNW        CHW
  .903     -6.080     .00090    -.03770    -.03350     .11027     .20577     .29820    -.13420     .04810     .23000    -.03950
  .903     -3.050     .01330    -.04280    -.03920     .11817     .20589     .14610    -.06880     .02420     .20880    -.02480
  .904       .000     .01800    -.04340    -.03970     .12834     .22212    -.02160     .01600    -.00360     .15660    -.00720
  .502      3.050     .01490    -.04490    -.04060     .12196     .21447    -.17780     .09140    -.02890     .11810     .00570
  .901      6.090    -.00440    -.03270    -.02790     .11077     .21419    -.33310     .15750    -.05350     .06420     .02050
          GRADIENT    .00026    -.00034    -.00023     .00062     .00141    -.05310     .02025    -.00870    -.01487     .00500
```

```
                                                                                                                PAGE   18
DATE 05 NOV 75             TABULATED DATA FOR CAL T14-053 (IA36)
                                                                                                 (RUF054)   ( 26 SEP 73  )
                                            CALSPAN T14-053     02 T1 S1      IA36
                                                                                              PARAMETRIC DATA
                  REFERENCE DATA
                                                                                   BETA    =       .000   MPSRA  =     30.000
SREF  =  2690.0004 FT.SQU   XMRP  =    953.0001 INCHES                              POWER   =      1.000   OPR    =     28.310
LREF  =  1328.0002 INCHES   YMRP  =       .0000 INCHES                              SRMPR   =      2.020   RUDDER =       .000
BREF  =  1328.0002 INCHES   ZMRP  =    400.0000 INCHES
SCALE =       .0190
                               RUN NO.   54/ 0    RN/L  =   2.67    GRADIENT INTERVAL =  -5.00/  5.00

  MACH      ALPHA       CN        CLMF       CLM        CAF        CA         CY         CYN        CBL        CNW        CHW
   .899     -8.100   -.47350     .15690     .16320     .11513     .24567    -.03010     .01820    -.00450    -.14550     .01120
   .903     -4.020   -.21880     .05460     .06000     .13583     .24160    -.02650     .01790    -.00470    -.00130     .00370
   .904       .020    .03600    -.05880    -.05350     .12019     .23957    -.02570     .01660    -.00490     .13730    -.00780
   .900      4.060    .25160    -.13090    -.12590     .12886     .22161    -.02340     .01500    -.00560     .24300    -.03050
  1.030      6.060    .35320    -.16150    -.15630     .12371     .22462    -.01660      01090    -.00560     .28000    -.04130
          GRADIENT    .05822    -.02296    -.02301    -.00086    -.00247     .00038    -.00036    -.00011     .03024    -.00423

                                                                                                 (RUF055)   ( 26 SEP 73  )
                                            CALSPAN T14-053     02 T1 S1      IA36
                                                                                              PARAMETRIC DATA
                  REFERENCE DATA
                                                                                   ALPHA   =       .000   MPSRA  =     90.000
SREF  =  2690.0004 FT.SQU   XMRP  =    953.0001 INCHES                              POWER   =      1.000   OPR    =     28.310
LREF  =  1328.0002 INCHES   YMRP  =       .0000 INCHES                              SRMPR   =      2.020   RUDDER =       .000
BREF  =  1328.0002 INCHES   ZMRP  =    400.0000 INCHES
SCALE =       .0190
                               RUN NO.   55/ 0    RN/L  =   2.59    GRADIENT INTERVAL =  -5.00/  5.00

  MACH       BETA       CN        CLMF       CLM        CAF        CA         CY         CYN        CBL        CNW        CHW
   .898     -6.080    .00190    -.03730    -.03200     .12568     .22108     .30520    -.13820     .04690     .21230    -.04200
  1.006     -3.050    .01540    -.04350    -.03840     .12616     .22682     .14950    -.07260     .02440     .19810    -.02750
   .899       .000    .02130    -.04630    -.04120     .13422     .23805    -.02150     .01500    -.00330     .14010    -.00860
   .898      3.050    .01350    -.04330    -.03800     .13341     .23114    -.18140     .09250    -.02910     .10480     .00590
   .899      6.080   -.00640    -.03020    -.02430     .12654     .22530    -.33120     .15540    -.05220     .05230     .02020
          GRADIENT   -.00031     .00003     .00007     .00119     .00071    -.05425     .02707    -.00877    -.01530     .00548
```

```
                                                                                                              PAGE   19
DATE 05 NOV 73           TABULATED DATA FOR CAL T14-053 (IA36)
                                         CALSPAN T14-053     02 T1 S1      IA36                              (RUF059)    ( 26 SEP 73  )

                 REFERENCE DATA                                                                                  PARAMETRIC DATA

SREF  =  2690.0004 FT.SQU   XMRP  =    953.0001 INCHES                                   BETA   =        .000   MPSRA  =    120.000
LREF  =  1328.0002 INCHES   YMRP  =       .0000 INCHES                                   POWER  =       1.000   OPR    =     36.200
BREF  =  1328.0002 INCHES   ZMRP  =    400.0000 INCHES                                   SRMPR  =       2.330   RUDDER =       .000
SCALE =       .0190

                           RUN NO.   59/ 0     RN/L  =    .18    GRADIENT INTERVAL  =  -5.00/  5.00

  MACH       ALPHA       CN        CLMF       CLM        CAF        CA         CY        CYN        CBL        CNW        CHW
  1.196     -8.110    -.51390     .19150     .19710     .26655     .36671    -.01030     .00000    -.00270    -.20000    -.00130
  1.200     -4.060    -.24440     .09160     .09650     .29614     .36926    -.00290    -.00130    -.00270    -.01900    -.00490
  1.198       .020     .02340    -.02830    -.02330     .28433     .36549    -.00890     .00410    -.00270     .13420    -.00990
  1.205      4.090     .25350    -.11450    -.10940     .28819     .36084    -.01160     .01100    -.00390     .25510    -.01050
  1.203      6.030     .36470    -.15870    -.15310     .27884     .34846    -.00660     .00670    -.00390     .32320    -.01330
          GRADIENT     .06109    -.02529    -.02527    -.00098    -.00103    -.00107     .00151    -.00015     .03363    -.00069

                                         CALSPAN T14-053     02 T1 S1      IA36                              (RUF060)    ( 26 SEP 73  )

                 REFERENCE DATA                                                                                  PARAMETRIC DATA

SREF  =  2690.0004 FT.SQU   XMRP  =    953.0001 INCHES                                   ALPHA  =        .000   MPSRA  =    120.000
LREF  =  1328.0002 INCHES   YMRP  =       .0000 INCHES                                   POWER  =       1.000   OPR    =     36.200
BREF  =  1328.0002 INCHES   ZMRP  =    400.0000 INCHES                                   SRMPR  =       2.330   RUDDER =       .000
SCALE =       .0190

                           RUN NO.   60/ 0     RN/L  =   2.08    GRADIENT INTERVAL  =  -5.00/  5.00

  MACH       BETA        CN        CLMF       CLM        CAF        CA         CY        CYN        CBL        CNW        CHW
  1.195     -6.080     .00490    -.02320    -.01730     .25471     .35637     .31190    -.14090     .05230     .27090    -.02200
  1.202     -3.050    -.00060    -.01730    -.01160     .25959     .36063     .16390    -.08190     .02690     .21180    -.01480
  1.199       .000     .02080    -.02440    -.01950     .26986     .35936    -.00590     .00240    -.00260     .14180    -.01040
  1.199      3.050     .00200    -.01710    -.01130     .25335     .34453    -.16500     .07900    -.03020     .03090    -.00360
  1.194      6.080    -.00650    -.01650    -.01070     .24626     .34074    -.31190     .13580    -.05590    -.03930     .00100
          GRADIENT     .00043     .00003     .00005    -.00102    -.00264    -.05392     .02638    -.00936    -.02966     .00184
```

CALSPAN T14-053 02 T1 S1 IA36 (RUF061) (26 SEP 73)

REFERENCE DATA

SREF = 2690.0004 FT.SQU XMRP = 953.0001 INCHES
LREF = 1328.0002 INCHES YMRP = .0000 INCHES
BREF = 1328.0002 INCHES ZMRP = 400.0000 INCHES
SCALE = .0190

PARAMETRIC DATA

ALPHA = .000 MPSRA = 120.000
POWER = .000 RUDDER = .000

RUN NO. 61/ 0 RN/L = 2.05 GRADIENT INTERVAL = -5.00/ 5.00

MACH	BETA	CN	CLMF	CLM	CAF	CA	CY	CYN	CBL	CNW	CHW
1.203	-5.080	-.00710	-.01340	-.00730	.25480	.37390	.31550	-.14440	.05350	.27340	-.02140
1.204	-3.050	-.00130	-.01350	-.00740	.25583	.37640	.16600	-.08350	.02740	.21890	-.01510
1.201	.000	.01290	-.01830	-.01240	.26395	.38453	-.00220	-.00020	-.00250	.14790	-.01110
1.203	3.050	-.00410	-.01130	-.00540	.25750	.36762	-.16660	.07990	-.03100	.02870	-.00480
1.205	6.080	-.00930	-.01180	-.00570	.24889	.36354	-.32000	.14140	-.05740	-.04230	-.00050
	GRADIENT	-.00046	.00036	.00033	.00027	-.00144	-.05452	.02679	-.00957	-.03118	.00169

CALSPAN T14-053 02 T1 S1 IA36 (RUF062) (26 SEP 73)

REFERENCE DATA

SREF = 2690.0004 FT.SQU XMRP = 953.0001 INCHES
LREF = 1328.0002 INCHES YMRP = .0000 INCHES
BREF = 1328.0002 INCHES ZMRP = 400.0000 INCHES
SCALE = .0190

PARAMETRIC DATA

BETA = .000 MPSRA = 120.000
POWER = .000 RUDDER = .000

RUN NO. 62/ 0 RN/L = 2.10 GRADIENT INTERVAL = -5.00/ 5.00

MACH	ALPHA	CN	CLMF	CLM	CAF	CA	CY	CYN	CBL	CNW	CHW
1.203	-8.070	-.52880	.20090	.20690	.25498	.38320	-.00030	-.00350	-.00140	-.19490	-.00210
1.204	-4.040	-.24560	.09090	.09650	.26219	.38579	-.00480	-.00030	-.00290	-.01810	-.00570
1.205	-.020	.01240	-.01800	-.01240	.26393	.38061	-.00580	.00120	-.00300	.14010	-.01630
1.201	4.010	.25270	-.10950	-.10370	.25652	.37283	-.00640	.00410	-.00350	.26650	-.01550
1.203	6.030	.36360	-.15300	-.14690	.25137	.36128	-.00750	.00880	-.00450	.31410	-.01460
	GRADIENT	.06190	-.02491	-.02487	-.00070	-.00161	-.00020	.00055	-.00007	.03535	-.00122

```
DATE 05 NOV 75          TABULATED DATA FOR CAL T14-053 (IA36)

                                       CALSPAN T14-053     02 T1 S1     IA36                                 (RUF063)   ( 26 SEP 73  )

                 REFERENCE DATA                                                                                  PARAMETRIC DATA

SREF  =  2690.0004 FT.SQU   XMRP  =    953.0001 INCHES                                       BETA    =      .000   MPSRA  =    120.000
LREF  =  1328.0002 INCHES   YMRP  =       .0000 INCHES                                       POWER   =     1.000   OPR    =     28.310
BREF  =  1328.0002 INCHES   ZMRP  =    400.0000 INCHES                                       SRMPR   =     2.020   RUDDER =       .000
SCALE =        .0190

                          RUN NO.   63/ 0    RN/L =   2.65   GRADIENT INTERVAL =  -5.00/  5.00

   MACH      ALPHA       CN        CLMF       CLM        CAF        CA         CY         CYN        CBL        CNW        CHW
   .900     -8.120    -.47240    .15620     .16220     .11923     .24803    -.02980     .01990    -.00440    -.14330     .01260
   .898     -4.010    -.22350    .06050     .06620     .12083     .24265    -.03180     .02190    -.00530     .00000     .00240
   .900       .040     .02250   -.04650    -.04120     .12794     .23203    -.03040     .02110    -.00500     .13910    -.00900
   .899      4.090     .24540   -.12600    -.12080     .11844     .21896    -.02570     .01760    -.00570     .25510    -.03070
   .896      6.040     .33870   -.15200    -.14680     .11781     .21625    -.01890     .01300    -.00650     .28550    -.04020
          GRADIENT     .05789   -.02302    -.02309    -.00030    -.00292     .00075    -.00053    -.00005     .03149    -.00409

                                       CALSPAN T14-053     02 T1 S1     IA36                                 (RUF064)   ( 26 SEP 73  )

                 REFERENCE DATA                                                                                  PARAMETRIC DATA

SREF  =  2690.0004 FT.SQU   XMRP  =    953.0001 INCHES                                       ALPHA   =      .000   MPSRA  =    120.000
LREF  =  1328.0002 INCHES   YMRP  =       .0000 INCHES                                       POWER   =     1.000   OPR    =     28.310
BREF  =  1328.0002 INCHES   ZMRP  =    400.0000 INCHES                                       SRMPR   =     2.020   RUDDER =       .000
SCALE =        .0190

                          RUN NO.   64/ 0    RN/L =   2.71   GRADIENT INTERVAL =  -5.00/  5.00

   MACH      BETA        CN        CLMF       CLM        CAF        CA         CY         CYN        CBL        CNW        CHW
   .903     -6.080     .00350   -.03840    -.03480     .11044     .19700     .29400    -.13130     .04750     .22290    -.03880
   .904     -3.050     .01600   -.04130    -.03660     .13388     .22943     .14480    -.06900     .02380     .20100    -.02500
   .899       .000     .02300   -.04560    -.04050     .13107     .23297    -.02790     .01870    -.00420     .13320    -.00930
   .901      3.050     .01300   -.04080    -.03520     .13040     .23081    -.18180     .09510    -.03000     .10530     .00630
   .902      6.090    -.00280   -.03080    -.02470     .12727     .23073    -.33350     .15810    -.05280     .04820     .02040
          GRADIENT    -.00049    .00008     .00023    -.00057     .00023    -.05354     .02690    -.00882    -.01569     .00513
```

```
                                    CALSPAN T14-053     02 T1 S1      IA36                        (RUF065)    ( 26 SEP 73  )

                REFERENCE DATA                                                                  PARAMETRIC DATA

SREF  =  2690.0004 FT.SQU   XMRP  =   953.0001 INCHES                             ALPHA  =      .000   MPSRA  =   120.000
LREF  =  1328.0002 INCHES   YMRP  =      .0000 INCHES                             POWER  =      .000   RUDDER =      .000
BREF  =  1328.0002 INCHES   ZMRP  =   400.0000 INCHES
SCALE =       .0190

                         RUN NO.   65/ 0    RN/L =   2.74    GRADIENT INTERVAL =  -5.00/  5.00

  MACH      BETA       CN        CLMF       CLM        CAF        CA         CY         CYN        CBL        CNW        CHW
  .904     -6.080    .00540    -.03880    -.03550    .11065    .19704     .23510    -.13180     .04760     .22290    -.03880
  .902     -3.050    .01160    -.04060    -.03740    .11349    .19951     .14470    -.06720     .02410     .20220    -.02470
  .904       .000    .01980    -.04410    -.04060    .11945    .21371    -.02520     .01820    -.00420     .14870    -.00790
  .901      3.050    .01480    -.04380    -.03990    .12222    .21083    -.17980     .09250    -.02960     .10600     .00450
  .903      6.090   -.00240    -.03230    -.02800    .11878    .21051    -.33340     .15780    -.05410     .05500     .01960
          GRADIENT   .00052    -.00052    -.00041    .00143    .00186    -.05320     .02618    -.00880    -.01577     .00479

                                    CALSPAN T14-053     02 T1 S1      IA36                        (RUF066)    ( 26 SEP 73  )

                REFERENCE DATA                                                                  PARAMETRIC DATA

SREF  =  2690.0004 FT.SQU   XMRP  =   953.0001 INCHES                             BETA   =      .000   MPSRA  =   120.000
LREF  =  1328.0002 INCHES   YMRP  =      .0000 INCHES                             POWER  =      .000   RUDDER =      .000
BREF  =  1328.0002 INCHES   ZMRP  =   400.0000 INCHES
SCALE =       .0190

                         RUN NO.   66/ 0    RN/L =    .24    GRADIENT INTERVAL =  -5.00/  5.00

  MACH      ALPHA      CN        CLMF       CLM        CAF        CA         CY         CYN        CBL        CNW        CHW
  .903     -8.050   -.46760     .15160     .15550    .11573    .21952    -.02570     .01730    -.00400    -.12480     .01270
  .903     -4.040   -.21770     .05250     .05630    .12006    .21844    -.02950     .02040    -.00530     .01400     .00380
  .901       .020    .01820    -.04250    -.03390    .12065    .21026    -.03000     .02060    -.00500     .14040    -.00900
  .901      3.990    .23400    -.11850    -.11550    .11552    .19901    -.02790     .01950    -.00580     .25500    -.03030
  .900      6.040    .32730    -.14450    -.14110    .10900    .19739    -.02300     .01640    -.00700     .28350    -.03940
          GRADIENT   .05626    -.02134    -.02140   -.00056   -.00242     .00020    -.00011    -.00006     .03002    -.00424
```

```
DATE 05 NOV 75           TABULATED DATA FOR CAL T14-053 (IA36)                                                                    PAGE   23

                                        CALSPAN T14-053     02 T1 S1      IA36                               (RUF071)   ( 26 SEP 73  )

              REFERENCE DATA                                                                                    PARAMETRIC DATA

SREF  =  2690.0004 FT.SQU   XMRP  =    953.0001 INCHES                                      BETA   =       .000   MPSRA  =    150.000
LREF  =  1328.0002 INCHES   YMRP  =       .0000 INCHES                                      POWER  =       .000   RUDDER =       .000
BREF  =  1328.0002 INCHES   ZMRP  =    400.0000 INCHES
SCALE =        .0190

                            RUN NO.   71/ 0    RN/L =    2.76    GRADIENT INTERVAL =  -5.00/  5.00

   MACH       ALPHA       CN          CLMF        CLM         CAF         CA          CY          CYN         CBL         CNW         CHW
   .904      -8.130    -.47310      .15600      .16010      .12407      .22430     -.02520      .01810     -.00430     -.12680      .01210
   .905      -4.050    -.22220      .05510      .05900      .12036      .22065     -.02840      .02070     -.00530      .01230      .00310
   .903        .020     .01230     -.03720     -.03360      .12312      .21828     -.02970      .02090     -.00550      .14050     -.00940
   .903       4.020     .23000     -.11560     -.11220      .11697      .20388     -.02740      .01980     -.00630      .25510     -.02990
   .901       6.010     .32470     -.14330     -.13980      .10940      .20249     -.02370      .01720     -.00720      .29140     -.03980
            GRADIENT    .05604     -.07116     -.02122     -.00042     -.00207      .00012     -.00011     -.00012      .03009     -.00409

                                        CALSPAN T14-053     02 T1 S1      IA36                               (RUF072)   ( 26 SEP 73  )

              REFERENCE DATA                                                                                    PARAMETRIC DATA

SREF  =  2690.0004 FT.SQU   XMRP  =    953.0001 INCHES                                      ALPHA  =       .000   MPSRA  =    150.000
LREF  =  1328.0002 INCHES   YMRP  =       .0000 INCHES                                      POWER  =       .000   RUDDER =       .000
BREF  =  1328.0002 INCHES   ZMRP  =    400.0000 INCHES
SCALE =        .0190

                            RUN NO.   72/ 0    RN/L =    2.74    GRADIENT INTERVAL =  -5.00/  5.00

   MACH       BETA        CN          CLMF        CLM         CAF         CA          CY          CYN         CBL         CNW         CHW
   .904      -6.080     .00470     -.03840     -.03490      .11485      .20116      .29590     -.13290      .04740      .22880     -.03860
   .901      -3.050     .00960     -.03860     -.03540      .11962      .20187      .14410     -.06730      .02320      .20140     -.02570
   .904        .000     .00970     -.03610     -.03240      .11897      .21604     -.02760      .01990     -.00490      .15080     -.00960
   .902       3.050     .00730     -.03890     -.03470      .11927      .20890     -.18160      .09570     -.03000      .11020      .00540
   .902       6.090    -.00940     -.02940     -.02480      .10705      .20635     -.31470      .13780     -.04660      .05160      .02030
            GRADIENT   -.00038     -.00005      .00011     -.00006      .00117     -.05339      .02672     -.00872     -.01495      .00510
```

CALSPAN T14-053 02 T1 S1 IA36 (RUF073) (26 SEP 73)

REFERENCE DATA

SREF = 2690.0004 FT.SQU XMRP = 953.0001 INCHES
LREF = 1328.0002 INCHES YMRP = .0000 INCHES
BREF = 1328.0002 INCHES ZMRP = 400.0000 INCHES
SCALE = .0190

PARAMETRIC DATA

BETA = .000 MPSRA = 150.000
POWER = 1.000 OPR = 28.310
SRMPR = 2.020 RUDDER = .000

RUN NO. 73/ 0 RN/L = 2.67 GRADIENT INTERVAL = -5.00/ 5.00

MACH	ALPHA	CN	CLMF	CLM	CAF	CA	CY	CYN	CBL	CNW	CHW
.902	-8.010	-.47020	.15640	.16250	.11767	.24188	-.03020	.02000	-.00480	-.14230	.01160
.902	-4.040	-.22370	.05830	.06390	.12925	.23958	-.03200	.02210	-.00560	-.00190	.00230
.900	.000	.02160	-.04500	-.03980	.13129	.23522	-.03000	.02060	-.00520	.13210	-.01000
.905	4.040	.24190	-.12350	-.11870	.13344	.22380	-.02650	.01850	-.00640	.24800	-.03040
.902	6.020	.34020	-.15300	-.14790	.12571	.22065	-.01980	.01380	-.00680	.28410	-.04040
	GRADIENT	.05762	-.02250	-.02260	.00052	-.00195	.00068	-.00045	-.00010	.03093	-.00405

CALSPAN T14-053 02 T1 S1 IA36 (RUF074) (26 SEP 73)

REFERENCE DATA

SREF = 2690.0004 FT.SQU XMRP = 953.0001 INCHES
LREF = 1328.0002 INCHES YMRP = .0000 INCHES
BREF = 1328.0002 INCHES ZMRP = 400.0000 INCHES
SCALE = .0190

PARAMETRIC DATA

ALPHA = .000 MPSRA = 150.000
POWER = 1.000 OPR = 28.310
SRMPR = 2.020 RUDDER = .000

RUN NO. 74/ 0 RN/L = 2.69 GRADIENT INTERVAL = -5.00/ 5.00

MACH	BETA	CN	CLMF	CLM	CAF	CA	CY	CYN	CBL	CNW	CHW
.902	-6.080	-.00120	-.03230	-.02740	.13188	.22248	.28930	-.12950	.04470	.21410	-.04090
.900	-3.050	.00940	-.03690	-.03200	.13193	.22357	.14270	-.06740	.02290	.18570	-.02690
.899	.000	.01580	-.04000	-.03480	.13271	.23352	-.02700	.01920	-.00470	.13330	-.00970
.899	3.050	.00920	-.03940	-.03270	.13438	.22535	-.18290	.09720	-.03040	.10440	.00590
.901	6.090	-.01110	-.02750	-.02140	.12641	.22561	-.32810	.15340	-.05130	.04210	.02100
	GRADIENT	-.00003	-.00025	-.00011	.00040	.00029	-.05338	.02698	-.00874	-.01349	.00538

```
                        CALSPAN T14-053      02 T1 S1      IA36                      (RUF075)   ( 26 SEP 73  )

          REFERENCE DATA                                                            PARAMETRIC DATA

SREF  =  2690.0004 FT.SQU   XMRP  =   953.0001 INCHES                     BETA   =      .000   MPSRA  =   150.000
LREF  =  1328.0002 INCHES   YMRP  =      .0000 INCHES                     POWER  =      .000   RUDDER =      .000
BREF  =  1328.0002 INCHES   ZMRP  =   400.0000 INCHES
SCALE =        0:90

                  RUN NO.   75/ 0    RN/L =   2.11    GRADIENT INTERVAL =  -5.00/  5.00

  MACH     ALPHA       CN        CLMF       CLM        CAF        CA         CY         CYN        CBL        CNW        CHW
  1.200    -8.110    -.53310    .20270    .20850    .25665    .38098    .00000    -.00370    -.00150    -.19090    -.00260
  1.203    -4.020    -.24630    .08990    .09570    .25863    .38355   -.00330    -.00130    -.00280    -.02010    -.00610
  1.205      .010     .01040   -.01870   -.01260    .26002    .38219   -.00640     .00140    -.00310     .13610    -.01070
  1.207     3.960     .24300   -.10720   -.10120    .25950    .36861   -.01330     .01210    -.00450     .25450    -.01190
  1.203     6.010     .36300   -.15400   -.14790    .25947    .36164   -.00790     .00860    -.00450     .32160    -.01470
          GRADIENT    .06132   -.02471   -.02468    .00011   -.00187   -.00125     .00168    -.00021     .03443    -.00073

                        CALSPAN T14-053      02 T1 S1      IA36                      (RUF076)   ( 26 SEP 73  )

          REFERENCE DATA                                                            PARAMETRIC DATA

SREF  =  2690.0004 FT.SQU   XMRP  =   953.0001 INCHES                     ALPHA  =      .000   MPSRA  =   150.000
LREF  =  1328.0002 INCHES   YMRP  =      .0000 INCHES                     POWER  =      .000   RUDDER =      .000
BREF  =  1328.0002 INCHES   ZMRP  =   400.0000 INCHES
SCALE =        .0190

                  RUN NO.   76/ 0    RN/L =   2.08    GRADIENT INTERVAL =  -5.00/  5.00

  MACH     BETA        CN        CLMF       CLM        CAF        CA         CY         CYN        CBL        CNW        CHW
  1.207    -6.080    -.00900   -.01430   -.00810    .25931    .37387    .31430    -.14350     .05390     .28020    -.02110
  1.204    -3.050    -.00230   -.01490   -.00890    .25459    .37505    .16430    -.08270     .02750     .21920    -.01530
  1.204      .000     .01250   -.01950   -.01370    .26578    .38261   -.00560     .00100    -.00280     .14980    -.01090
  1.206     3.050    -.00760   -.01130   -.00540    .25846    .36572   -.16510     .07830    -.03110     .03440    -.00480
  1.206     6.080    -.01140   -.01180   -.00580    .25666    .36284   -.31930     .13950    -.05750    -.03790    -.00030
          GRADIENT   -.00087    .00059    .00057    .00063   -.00153   -.05400     .02639    -.00961    -.03030     .00172
```

```
DATE 05 NOV 75             TABULATED DATA FOR CAL T14-053 (IA36)                                                                      PAGE   26

                                          CALSPAN T14-053      02 TI SI      IA36                                 (RUF077)    ( 26 SEP 73  )

                    REFERENCE DATA                                                                                     PARAMETRIC DATA

SREF  =  2690.0004 FT.SQU    XMRP   =    953.0001 INCHES                                            BETA    =        .000   MPSRA   =    150.000
LREF  =  1328.0002 INCHES    YMRP   =        .0000 INCHES                                           POWER   =       1.000   OPR     =     36.200
BREF     1328.0002 INCHES    ZMRP   =    400.0000 INCHES                                            SRMPR   =       2.330   RUDDER  =       .000
SCALE =       .0190

                                  RUN NO.   77/ 0    RN/L =    2.02    GRADIENT INTERVAL =  -5.00/  5.00

  MACH       ALPHA         CN          CLMF         CLM         CAF          CA           CY          CYN          CBL          CNW          CHW
  1.205     -8.040      -.52390      .20190      .20750      .24942      .35179     -.00430     -.00050     -.00190     -.19050     -.00130
  1.206     -4.010      -.24060      .08600      .09130      .25718      .36248     -.00930      .00130     -.00290     -.01730     -.00470
  1.201       .020       .01660     -.02390     -.01840      .26003      .36096     -.00930      .00300     -.00290      .14530     -.00980
  1.193      4.050       .25200     -.11520     -.10330      .25297      .34532     -.01100      .00910     -.00350      .27790     -.01490
  1.202      6.050       .35660     -.15280     -.14680      .25319      .33817     -.00570      .00400     -.00350      .33000     -.01380
          GRADIENT       .06112     -.02496     -.02489     -.00052     -.00213     -.00021      .00097     -.00007      .03653     -.00127

                                          CALSPAN T14-053      02 TI SI      IA36                                 (RUF078)    ( 25 SEP 73  )

                    REFERENCE DATA                                                                                     PARAMETRIC DATA

SREF  =  2690.0004 FT.SQU    XMRP   =    953.0001 INCHES                                            ALPHA   =        .000   MPSRA   =    150.000
LREF  =  1328.0002 INCHES    YMRP   =        .0000 INCHES                                           POWER   =       1.000   OPR     =     36.200
BREF  =  1328.0002 INCHES    ZMRP   =    400.0000 INCHES                                            SRMPR   =       2.330   RUDDER  =       .000
SCALE =       .0190

                                  RUN NO.   78/ 0    RN/L =    2.05    GRADIENT INTERVAL =  -5.00/  5.00

  MACH       BETA          CN          CLMF         CLM         CAF          CA           CY          CYN          CBL          CNW          CHW
  1.175     -6.080      -.00100     -.01970     -.01390      .25564      .35662      .30650     -.13810      .05260      .28140     -.02050
  1.193     -3.040       .00570     -.02190     -.01530      .24959      .35671      .16080     -.08060      .02580      .21820     -.01530
  1.206       .000       .01460     -.02200     -.01650      .26712      .35142     -.00450      .00060     -.00240      .14870     -.00940
  1.197      3.050      -.00030     -.01760     -.01180      .25061      .34662     -.16430      .07690     -.03020      .02450     -.00370
  1.197      6.080      -.01110     -.01170     -.00610      .24538      .34274     -.31540      .13630     -.05700     -.03840      .00190
          GRADIENT      -.00099      .00071      .00058      .00016     -.00166     -.05338      .02566     -.00936,    -.03181      .00190
```

```
                                        CALSPAN T14-053     01 T1 S1     IA36                         (RUF081)   ( 26 SEP 73  )

          REFERENCE DATA                                                                                PARAMETRIC DATA

SREF  =  2690.0004 FT.SQU   XMRP  =   953.0001 INCHES                                 BETA   =      .000  MPSRA  =      .000
LREF  =  1328.0002 INCHES   YMRP  =      .0000 INCHES                                 POWER  =      .000  RUDDER =      .000
BREF  =  1328.0002 INCHES   ZMRP  =   400.0000 INCHES
SCALE =       .0190

                              RUN NO.   81/ 0   RN/L =   2.16   GRADIENT INTERVAL =  -5.00/  5.00

   MACH       ALPHA        CN         CLMF        CLM         CAF         CA          CY          CYN         CBL         CNW         CHW
   1.203     -8.110     -.52460     .19890      .20450      .23983      .37547      .00100     -.00570     -.00050     -.17670     -.00250
   1.197     -4.070     -.24830     .09030      .03600      .24670      .37695      .00000     -.00480     -.00150     -.00800     -.00640
   1.203       .050      .00880    -.01730     -.01160      .25227      .37485     -.00450     -.00100     -.00200      .14400     -.01110
   1.200      4.020      .24320    -.10710     -.10140      .24586      .35735     -.01300      .01020     -.00380      .25680     -.01230
   1.197      6.000      .35920    -.15240     -.14660      .24259      .35216     -.00850      .00730     -.00420      .31960     -.01560
           GRADIENT      .06076    -.02441     -.02441     -.00009     -.00241     -.00160      .00185     -.00028      .03276     -.00073

                                        CALSPAN T14-053     01 T1 S1     IA36                         (RUF082)   ( 26 SEP 73  )

          REFERENCE DATA                                                                                PARAMETRIC DATA

SREF  =  2691.0004 FT.SQU   XMRP  =   953.0001 INCHES                                 ALPHA  =      .000  MPSRA  =      .000
LREF  =  1326.0002 INCHES   YMRP  =      .0000 INCHES                                 POWER  =      .000  RUDDER =      .000
BREF  =  1328.0002 INCHES   ZMRP  =   400.0000 INCHES
SCALE =       .0190

                              RUN NO.   82/ 0   RN/L =   2.13   GRADIENT INTERVAL =  -5.00/  5.00

   MACH       BETA         CN         CLMF        CLM         CAF         CA          CY          CYN         CBL         CNW         CHW
   1.202     -6.080     -.01180    -.01190     -.00600      .23876      .36304      .31650     -.14570      .05480      .27290     -.02240
   1.202     -3.050     -.00270    -.01390     -.00800      .24314      .36632      .16510     -.08450      .02820      .21530     -.01610
   1.202       .000      .00900    -.01790     -.01220      .25135      .37520     -.00170     -.00230     -.00150      .14970     -.01140
   1.200      3.050     -.00760    -.01190     -.00580      .23890      .35829     -.15510      .06390     -.02820      .03220     -.00570
   1.201      6.080     -.01270    -.01350     -.00760      .23384      .35495     -.26880      .09000     -.04500     -.03990     -.00090
           GRADIENT     -.00080     .00033      .00036     -.00071     -.00132     -.05249      .02533     -.00925     -.03002      .00170
```

CALSPAN T14-053 01 T1 S1 IA36 (RUF083) (26 SEP 73)

REFERENCE DATA

SREF = 2690.0004 FT.SQU XMRP = 953.0001 INCHES
LREF = 1328.0002 INCHES YMRP = .0000 INCHES
BREF = 1328.0002 INCHES ZMRP = 400.0000 INCHES
SCALE = .0190

PARAMETRIC DATA

BETA = .000 MPSRA = .000
POWER = 1.000 OPR = 36.200
SRMPR = 2.330 RUDDER = .000

RUN NO. 83/ 0 RN/L = 2.09 GRADIENT INTERVAL = -5.00/ 5.00

MACH	ALPHA	CN	CLMF	CLM	CAF	CA	CY	CYN	CBL	CNW	CHW
1.199	-8.090	-.50700	.18730	.19290	.24346	.35131	-.00030	-.00420	-.00070	-.18050	-.00070
1.194	-4.050	-.22990	.07750	.08290	.25372	.35008	-.00390	-.00250	-.00160	-.02090	-.01400
1.198	-.050	.01660	-.02490	-.01940	.25828	.35490	-.00380	-.00080	-.00160	.14710	-.00870
1.194	3.990	.24610	-.11020	-.10460	.25156	.32569	-.01130	.00500	-.00330	.26180	[illegible]
1.197	6.050	.35490	-.15790	-.15240	.24970	.32953	-.00770	.00680	-.00350	.32660	-.01350
	GRADIENT	.05920	-.02334	-.02332	-.00027	-.00167	-.00092	.00143	-.00021	.03515	-.00087

CALSPAN T14-053 01 T1 S1 IA36 (RUF084) (26 SEP 73)

REFERENCE DATA

SREF = 2690.0004 FT.SQU XMRP = 953.0001 INCHES
LREF = 1328.0002 INCHES YMRP = .0000 INCHES
BREF = 1328.0002 INCHES ZMRP = 400.0000 INCHES
SCALE = .0190

PARAMETRIC DATA

ALPHA = .000 MPSRA = .000
POWER = 1.000 OPR = 36.200
SRMPR = 2.330 RUDDER = .000

RUN NO. 84/ 0 RN/L = 2.11 GRADIENT INTERVAL = -5.00/ 5.00

MACH	BETA	CN	CLMF	CLM	CAF	CA	CY	CYN	CBL	CNW	CHW
1.193	-6.070	-.01100	-.02320	-.01720	.24010	.33800	.31120	-.14160	.05440	27660	-.02070
1.198	-3.050	.00990	-.02530	-.01950	.25249	.34533	.16610	-.08480	.02850	.21720	-.01410
1.196	.000	.00800	-.02670	-.02110	.25767	.35536	-.00570	.00000	-.00160	.14650	-.00930
1.198	3.050	-.00080	-.01880	-.01310	.24749	.34030	-.15330	.06790	-.02770	.02850	-.00330
1.197	5.070	-.00310	-.02190	-.01640	.24375	.33498	-.26000	.08350	-.04400	-.02930	.00220
	GRADIENT	-.00175	.00107	.00105	-.00082	-.00082	-.05236	.02503	-.00921	-.03093	.00177

```
                                 CALSPAN T14-053     01 T1 S1   OPR = 2.65 X NOM                 (RUF085)   ( 26 SEP 73  )

            REFERENCE DATA                                                                      PARAMETRIC DATA

SREF  =  2690.0004 FT.SQU   XMRP  =   953.0001 INCHES                            BETA   =     .000  MPSRA  =      .000
LREF  =  1328.0002 INCHES   YMRP  =      .0000 INCHES                            POWER  =    1.000  OPR    =    95.800
BREF  =  1328.0002 INCHES   ZMRP  =   400.0000 INCHES                            SRMPR  =    2.330  RUDDER =      .000
SCALE =       .0190

                         RUN NO.   85/ 0    RN/L =   2.06    GRADIENT INTERVAL =  -5.00/  5.00

  MACH       ALPHA       CN        CLMF       CLM        CAF        CA         CY         CYN        CBL        CNW        CHW
  1.194      -8.070    -.49900    .17370     .17800     .23606     .33241    -.00350    -.00440    -.00100    -.18370     .00020
  1.192      -4.090    -.22950    .07330     .07770     .24622     .33450    -.00240    -.00350    -.00130    -.01580    -.00330
  1.193       -.060     .02060   -.03030    -.02580     .25310     .33569    -.00580    -.00060    -.00150     .14140    -.00880
  1.196       5.970     .36360   -.16070    -.15630     .24776     .31554    -.00370     .00180    -.00210     .33510    -.01270
          GRADIENT      .06206   -.02571    -.02560     .00171     .00030    -.00084     .00072    -.00005     .03901    -.00135

                                 CALSPAN T14-053     01 T1 S1   OPR = 1.84 X NOM                 (RUF086)   ( 26 SEP 73  )

            REFERENCE DATA                                                                      PARAMETRIC DATA

SREF  =  2690.0004 FT.SQU   XMRP  =   953.0001 INCHES                            BETA   =     .000  MPSRA  =      .000
LREF  =  1328.0002 INCHES   YMRP  =      .0000 INCHES                            POWER  =    1.000  OPR    =    66.700
BREF  =  1328.0002 INCHES   ZMRP  =   400.0000 INCHES                            SRMPR  =    2.330  RUDDER =      .000
SCALE =       .0190

                         RUN NO.   86/ 0    RN/L =   2.01    GRADIENT INTERVAL =  -5.00/  5.00

  MACH       ALPHA       CN        CLMF       CLM        CAF        CA         CY         CYN        CBL        CNW        CHW
  1.189      -8.120    -.50770    .18130     .18670     .23568     .34449    -.00210    -.00510    -.00060    -.18200    -.00020
  1.191      -4.090    -.23110    .07820     .08340     .25062     .34823    -.00240    -.00310    -.00120    -.00970    -.00410
  1.196       -.070     .01700   -.02470    -.01940     .25958     .35030    -.00350    -.00130    -.00150     .14560    -.00920
  1.197       3.980     .25470   -.11590    -.11020     .25451     .33795    -.00060    -.00250    -.00110     .28950    -.01360
  1.190       6.060     .36370   -.15780    -.15230     .25265     .32793    -.00320     .00290    -.00260     .34180    -.01310
          GRADIENT      .06020   -.02405    -.02399     .00048    -.00128     .00022     .00007     .00001     .03707    -.00118
```

```
                                    CALSPAN T14-053     01 T1 S1   SRMPR=1.36 X NOM              (RUF087)   ( 26 SEP 73  )

           REFERENCE DATA                                                                        PARAMETRIC DATA

SREF  =  2590.0004 FT.SQU   XMRP  =   953.0001 INCHES                                    BETA   =      .000   MPSRA  =      .000
LREF  =  1328.0002 INCHES   YMRP  =      .0000 INCHES                                    POWER  =     1.000   DPR    =    36.200
BREF  =  1328.0002 INCHES   ZMRP  =   400.0000 INCHES                                    SRMPR  =     2.330   RUDDER =      .000
SCALE =       .0190

                          RUN NO.   87/ 0    RN/L =   2.06    GRADIENT INTERVAL =  -5.00/  5.00

  MACH      ALPHA       CN        CLMF       CLM        CAF        CA         CY         CYN        CBL        CNW        CHW
  1.198     -7.930    -.48640    .16760     .17230     .24259     .32893    -.00220    -.00410    -.00080    -.17910     .00130
  1.199     -3.690    -.21410    .06650     .07090     .25339     .32830    -.00620     .00000    -.00150    -.00120    -.00310
  1.195       .170     .03260   -.03600    -.03180     .25577     .32553    -.00670     .00120    -.00130     .15890    -.00820
  1.198      4.230     .25630   -.12090    -.11560     .25102     .30459    -.01430     .01190    -.00300     .26840    -.00930
  1.196      6.130     .36610   -.16200    -.15770     .24822     .29869    -.00640     .00300    -.00250     .34090    -.01210
         GRADIENT      .05800   -.02311    -.02312    -.00021    -.00293    -.00107     .00147    -.00026     .03324    -.00076

                                    CALSPAN T14-053     01 T1 S1     IA36                        (RUF088)   ( 26 SEP 73  )

           REFERENCE DATA                                                                        PARAMETRIC DATA

SREF  =  2690.0004 FT.SQU   XMRP  =   953.0001 INCHES                                    BETA   =      .000   MPSRA  =      .000
LREF  =  1328.0002 INCHES   YMRP  =      .0000 INCHES                                    POWER  =      .000   RUDDER =      .000
BREF  =  1328.0002 INCHES   ZMRP  =   400.0000 INCHES
SCALE =       .0190

                          RUN NO.   88/ 0    RN/L =   2.80    GRADIENT INTERVAL =  -5.00/  5.00

  MACH      ALPHA       CN        CLMF       CLM        CAF        CA         CY         CYN        CBL        CNW        CHW
   .898     -8.070    -.46830    .15070     .05510     .10410     .22111    -.02070     .01250    -.00280    -.13040     .01130
   .901     -4.050    -.22810    .05120     .05520     .11980     .22354    -.02500     .01630    -.00410     .00030     .00590
   .699      -.030     .01820   -.04510    -.04130     .11641     .21080    -.02500     .01600    -.00350     .12970    -.00780
   .699      4.000     .23230   -.11830    -.11500     .11233     .20208    -.02510     .01590    -.00490     .24160    -.02960
   .901      5.970     .32360   -.14540    -.14190     .10663     .19904    -.01980     .01220    -.00560     .27540    -.03990
         GRADIENT      .05595   -.02105    -.02114    -.00093    -.00267    -.00001    -.00005    -.00010     .02537    -.00427
```

```
                                      CALSPAN T14-053      01 T1 S1      IA36                          (RUF089)   ( 26 SEP 73  )

              REFERENCE DATA                                                                              PARAMETRIC DATA

SREF  =  2690.0004 FT.SQU   XMRP  =    953.0001 INCHES                                     ALPHA  =       .000   MPSRA  =        .000
LREF  =  1328.0002 INCHES   YMRP  =       .0000 INCHES                                     POWER  =       .000   RUDDER =        .000
BREF  =  1328.0002 INCHES   ZMRP  =    400.0000 INCHES
SCALE =        .0190

                         RUN NO.   89/ 0    RN/L =   2.78    GRADIENT INTERVAL =  -5.00/  5.00

  MACH       BETA         CN         CLMF        CLM         CAF         CA          CY          CYN         CBL         CNW         CHW
   .902     -6.080      .00110     -.03790     -.03400      .11480      .20292      .29730     -.13420      .04800      .22150     -.03840
   .899     -3.050      .01320     -.04390     -.04020      .11173      .20267      .15080     -.07220      .02510      .19540     -.02500
   .905       .000      .01730     -.04450     -.04070      .11769      .21418     -.02220      .01450     -.00280      .14480     -.00720
   .901      3.050      .01380     -.04550     -.04150      .11598      .20741     -.16300      .07440     -.02360      .09980      .00620
   .901      6.090     -.00270     -.03440     -.02980      .11273      .20983     -.27030      .09320     -.03650      .04560      .02050
           GRADIENT     .00010     -.00026     -.00021      .00086      .00078     -.05144      .02403     -.00798     -.01567      .00511

                                      CALSPAN T14-053      01 T1 S1      IA36                          (RUF090)   ( 26 SEP 73  )

              REFERENCE DATA                                                                              PARAMETRIC DATA

SREF  =  2690.0004 FT.SQU   XMRP  =    953.0001 INCHES                                     BETA   =       .000   MPSRA  =        .000
LREF  =  1328.0002 INCHES   YMRP  =       .0000 INCHES                                     POWER  =      1.000   OPR    =      28.310
BREF  =  1328.0002 INCHES   ZMRP  =    400.0000 INCHES                                     SRMPR  =      2.020   RUDDER =        .000
SCALE =        .0190

                         RUN NO.   90/ 0    RN/L =   2.69    GRADIENT INTERVAL =  -5.00/  5.00

  MACH       ALPHA        CN         CLMF        CLM         CAF         CA          CY          CYN         CBL         CNW         CHW
   .898     -3.990     -.21020      .04800      .05320      .13194      .23482     -.02180      .01330     -.00310     -.00470      .00370
   .899       .100      .02370     -.04540     -.04040      .13455      .23046     -.02100      .01290     -.00250      .13260     -.00800
   .897      4.030      .24450     -.12760     -.12250      .12220      .21784     -.01820      .01100     -.00400      .24180     -.02990
   .901      5.990      .33590     -.15440     -.14940      .12590      .21899     -.01250      .00670     -.00490      .27440     -.04000
           GRADIENT     .05670     -.02190     -.02191     -.00120     -.00211      .00045     -.00029     -.00011      .03075     -.00418
```

DATE 05 NOV 75 TABULATED DATA FOR CAL T14-053 (IA36)

CALSPAN T14-053 01 T1 S1 IA36

(RUF091) (26 SEP 73)

REFERENCE DATA

SREF = 2690.0004 FT.SQU XMRP = 953.0001 INCHES
LREF = 1328.0002 INCHES YMRP = .0000 INCHES
BREF = 1328.0002 INCHES ZMRP = 400.0000 INCHES
SCALE = .0190

PARAMETRIC DATA

ALPHA = .000 MPSRA = .000
POWER = 1.000 OPR = 28.310
SRMPR = 2.020 RUDDER = .000

RUN NO. 91/ 0 RN/L = 2.68 GRADIENT INTERVAL = -5.00/ 5.00

MACH	BETA	CN	CLMF	CLM	CAF	CA	CY	CYN	CBL	CNW	CHW
.897	-6.080	.01200	-.04420	-.03890	.12151	.21586	.30910	-.14130	.04850	.21650	-.04080
.899	-3.050	.02240	-.04970	-.04500	.13353	.22420	.15560	-.07650	.02550	.19070	-.02550
.899	.000	.02520	-.04820	-.04330	.13584	.23258	-.01990	.01240	-.00220	.13790	-.00800
.898	3.050	.02260	-.04930	-.04390	.12902	.22283	-.16070	.07290	-.02310	.10610	.00620
.899	6.080	.00520	-.04000	-.03440	.12342	.21982	-.26670	.09200	-.03540	.04490	.02110
	GRADIENT	.00003	.00007	.00018	-.00074	-.00022	-.05185	.02449	-.00797	-.01387	.00520

CALSPAN T14-053 01 T1 S1 OPR = 2.5 X NOM

(RUF092) (26 SEP 73)

REFERENCE DATA

SREF = 2690.0004 FT.SQU XMRP = 953.0001 INCHES
LREF = 1328.0002 INCHES YMRP = .0000 INCHES
BREF = 1328.0002 INCHES ZMRP = 400.0000 INCHES
SCALE = .0190

PARAMETRIC DATA

BETA = .000 MPSRA = .000
POWER = 1.000 OPR = 70.500
SRMPR = 2.020 RUDDER = .000

RUN NO. 92/ 0 RN/L = 2.70 GRADIENT INTERVAL = -5.00/ 5.00

MACH	ALPHA	CN	CLMF	CLM	CAF	CA	CY	CYN	CBL	CNW	CHW
.900	-8.140	-.45230	.14090	.14730	.12465	.24313	-.02020	.01050	-.00270	-.13470	.01430
.897	-4.020	-.20510	.04180	.04800	.13410	.23620	-.02520	.01540	-.00410	.00490	.00410
.903	.020	.03040	-.05380	-.04810	.14063	.23628	-.02340	.01420	-.00320	.14900	-.00650
.899	4.020	.24580	-.12960	-.12390	.13961	.22545	-.02130	.01210	-.00460	.25280	-.02910
.898	6.010	.33930	-.15730	-.15150	.13361	.22297	-.00810	.00350	-.00400	.28570	-.04020
	GRADIENT	.05621	-.02132	-.02138	.00069	-.00133	.00049	-.00041	-.00006	.03084	-.00413

```
DATE 05 NOV 75            TABULATED DATA FOR CAL T14-053 (IA36)                                              PAGE   33

                                          CALSPAN T14-053     01 T1 S1   OPR = 1.72 X NOM                 (RUF093)   ( 26 SEP 73  )

                 REFERENCE DATA                                                                        PARAMETRIC DATA

SREF  =  2690.0004 FT.SQU   XMRP  =    953.0001 INCHES                               BETA    =      .000   MPSRA   =      .000
LREF  =  1328.0002 INCHES   YMRP  =       .0000 INCHES                               POWER   =     1.000   OPR     =    48.600
BREF  =  1328.0002 INCHES   ZMRP  =    400.0000 INCHES                               SRMPR   =     2.020   RUDDER  =      .000
SCALE =       .0190

                             RUN NO.    93/ 0    RN/L =    2.70    GRADIENT INTERVAL =  -5.00/  5.00

  MACH       ALPHA        CN         CLMF        CLM         CAF         CA          CY          CYN         CBL         CNW         CHW
   .898      -8.100     -.45690      .14330      .14940      .11859      .24117     -.02130      .01190     -.00280     -.13230      .01320
   .900      -3.990     -.20930      .04790      .05350      .13380      .23723     -.02300      .01380     -.00340      .00900      .00470
   .899        .060      .03150     -.05450     -.04920      .13497      .23232     -.02210      .01330     -.00300      .14900     -.00820
   .904       4.060      .24980     -.13140     -.12650      .14054      .22723     -.01920      .01140     -.00440      .25770     -.02650
   .898       6.010      .34130     -.15760     -.15230      .12723      .22083     -.01210      .00610     -.00470      .29270     -.04030
            GRADIENT     .05704     -.02228     -.02237      .00094     -.00124      .00047     -.00030     -.00012      .03090     -.00412

                                          CALSPAN T14-053     01 T1 S1   SRMPA = 1.2 X NOM                (RUF094)   ( 26 SEP 73  )

                 REFERENCE DATA                                                                        PARAMETRIC DATA

SREF  =  2690.0004 FT.SQU   XMRP  =    953.0001 INCHES                               BETA    =      .000   MPSRA   =      .000
LREF  =  1328.0002 INCHES   YMRP  =       .0000 INCHES                               POWER   =     1.000   OPR     =    28.310
BREF  =  1328.0002 INCHES   ZMRP  =    400.0000 INCHES                               SRMPR   =     2.400   RUDDER  =      .000
SCALE =       .0190

                             RUN NO.    94/ 0    RN/L =    2.66    GRADIENT INTERVAL =  -5.00/  5.00

  MACH       ALPHA        CN         CLMF        CLM         CAF         CA          CY          CYN         CBL         CNW         CHW
   .898      -7.970     -.44730      .13790      .14280      .11797      .22019     -.02130      .01200     -.00270     -.13170      .01180
   .894      -3.980     -.20770      .04840      .05320      .12505      .21159     -.02240      .01350     -.00320      .00490      .00070
   .901        .120      .03070     -.05290     -.04850      .13507      .21224     -.02270      .01380     -.00290      .14860     -.00890
   .905       4.090      .24730     -.12920     -.12520      .13776      .20701     -.02050      .01230     -.00410      .26360     -.02930
   .897       6.070      .33720     -.15460     -.14990      .11851      .19883     -.01270      .00670     -.00470      .29580     -.03990
            GRADIENT     .05639     -.02202     -.02212      .00158     -.00056      .00023     -.00015     -.00011      .03207     -.00371
```

```
DATE 05 NOV 75            TABULATED DATA FOR CAL T14-053 (IA36)

                                    CALSPAN T14-053      01 T1 S1      IA36                         (RUF095)    ( 26 SEP 73  )

                 REFERENCE DATA                                                                          PARAMETRIC DATA

SREF  =  2690.0004 FT.SQU    XMRP  =    953.0000 INCHES                      BETA  =        .000    MPSRA  =       .000
LREF  =  1328.0302 INCHES    YMRP  =       .0000 INCHES                      POWER =        .000    RUDDER =     10.000
BREF  =  1328.0002 INCHES    ZMRP  =    400.0000 INCHES
SCALE =       .0190

                         RUN NO.   95/ 0     RN/L =   2.15    GRADIENT INTERVAL =  -5.00/  5.00

  MACH      ALPHA       CN         CLMF        CLM         CAF         CA          CY          CYN         CBL         CNW         CHW
  1.203     -8.100    -.52640     .20053      .20610      .24522      .37964      .01580     -.01930      .00540     -.17130     -.00270
  1.202     -4.040    -.24520     .09056      .09510      .25580      .38126      .00890     -.01560      .00350     -.00500     -.00590
  1.206      -.020     .00810    -.01580     -.01030      .26184      .37947      .00780     -.01320      .00310      .14880     -.01020
  1.204      3.990     .24460    -.10510     -.10010      .25619      .36418     -.00190     -.00100      .00100      .26110     -.01130
  1.202      6.030     .36280    -.15200     -.14530      .25272      .35727      .00270      .00400      .00060      .32790     -.01470
         GRADIENT      .06100    -.02443     -.02443     -.00008     -.00213     -.00134      .00182     -.00031      .03314     -.00067

                                    CALSPAN T14-053      01 T1 S1      IA36                         (RUF096)    ( 26 SEP 73  )

                 REFERENCE DATA                                                                          PARAMETRIC DATA

SREF  =  2690.0004 FT.SQU    XMRP  =    953.0001 INCHES                      ALPHA =        .000    MPSRA  =       .000
LREF  =  1328.0002 INCHES    YMRP  =       .0000 INCHES                      POWER =        .000    RUDDER =     10.000
BREF  =  1328.0002 INCHES    ZMRP  =    400.0000 INCHES
SCALE =       .0190

                         RUN NO.   96/ 0     RN/L -   2.12    GRADIENT INTERVAL =  -5.00/  5.00

  MACH      BETA        CN         CLMF        CLM         CAF         CA          CY          CYN         CBL         CNW         CHW
  1.200     -6.080    -.01360    -.00940     -.00350      .24669      .36771      .32790     -.15910      .06050      .28440     -.02120
  1.203     -3.050    -.00280    -.01220     -.00350      25275       .37077      .17760     -.09770      .03380      .23000     -.01480
  1.199       .000     .01080    -.01740     -.01170      .25910      .37829      .00980     -.01370      .00330      .15870     -.01040
  1.203      3.050    -.00530    -.01110     -.00520      .24890      .36331     -.15480      .06500     -.02520      .03740     -.00520
  1.203      6.080    -.01030    -.01180     -.00600      .24288      .35005     -.30420      .12420     -.05130     -.03160     -.00050
         GRADIENT     -.00041     .00018      .00021     -.00063     -.00122     -.05449      .02667     -.00957     -.03157      00157
```

```
                         CALSPAN T14-053     01 T1 S1     IA36                    (RUF097)   ( 26 SEP 73  )

          REFERENCE DATA                                                                PARAMETRIC DATA

SREF  =  2690.0004 FT.SQU   XMRP  =   953.0001 INCHES                     BETA   =     .000  MPSRA  =     .000
LREF  =  1328.0002 INCHES   YMRP  =      .0000 INCHES                     POWER  =    1.000  OPR    =   36.200
BREF  =  1328.0002 INCHES   ZMRP  =   400.0000 INCHES                     SRMPR  =    2.330  RUDDER =   10.000
SCALE =      .0190

                  RUN NO.   97/ 0    RN/L =   2.11    GRADIENT INTERVAL =  -5.00/  5.00

  MACH      ALPHA       CN        CLMF       CLM        CAF        CA         CY        CYN        CBL        CNW        CHW
  1.187     -7.790   -.48570     .17500     .18120     .23872     .35351     .01350   -.01870     .00530    -.16740    -.00050
  1.205     -4.020   -.23580     .08320     .08970     .25799     .35503     .01400   -.01760     .00440    -.00110    -.00400
  1.157      4.060    .25540    -.11630    -.10930     .24100     .33607     .00050   -.00520     .00210     .26050    -.01150
  1.190      6.010    .36370    -.15670    -.15050     .23877     .32841     .00030   -.00190     .00070     .33150    -.01370
         GRADIENT     .06079    -.02469    -.02458    -.00210    -.00235    -.00166    .00153    -.00028     .03230    -.00093

                         CALSPAN T14-053     01 T1 S1     IA36                    (RUF098)   ( 26 SEP 73  )

          REFERENCE DATA                                                                PARAMETRIC DATA

SREF  =  2690.0004 FT.SQU   XMRP  =   953.0001 INCHES                     ALPHA  =     .000  MPSRA  =     .000
LREF  =  1328.0002 INCHES   YMRP  =      .0000 INCHES                     POWER  =    1.000  OPR    =   36.200
BREF  =  1328.0002 INCHES   ZMRP  =   400.0000 INCHES                     SRMPR  =    2.330  RUDDER =   10.000
SCALE =      .0190

                  RUN NO.   98/ 0    RN/L =   2.10    GRADIENT INTERVAL =  -5.00/  5.00

  MACH      BETA        CN        CLMF       CLM        CAF        CA         CY        CYN        CBL        CNW        CHW
  1.195     -6.070   -.00210    -.01950    -.01360     .24567     .34149     .32280   -.15470     .06020     .28620    -.01990
  1.206     -3.050    .00540    -.01860    -.01320     .26291     .34973     .17930   -.09900     .03430     .22990    -.01290
  1.202       .000    .02630    -.02640    -.02060     .26089     .35720     .00950   -.01300     .00370     .15890    -.00350
  1.203      3.050   -.00110    -.01430    -.00830     .24995     .34275    -.15630    .06600    -.02520     .03750    -.00290
  1.199      6.080   -.01050    -.01170    -.00620     .24785     .34001    -.30180    .12320    -.05070    -.02100     .00170
         GRADIENT    -.00107     .00070     .00080    -.00212    -.00114    -.05502    .02689    -.00575    -.03154     .00154
```

```
                                   CALSPAN T14-053     01 T1 S1  OPR = 2.7 X NOM                  (RUF099)   ( 26 SEP 73  )

             REFERENCE DATA                                                                         PARAMETRIC DATA

SREF  =  2690.0004 FT.SQU   XMRP  =   953.0001 INCHES                                 ALPHA  =       .000   MPSRA  =       .000
LREF  =  1328.0002 INCHES   YMRP  =      .0000 INCHES                                 POWER  =      1.000   OPR    =     97.600
BREF  =  1328.0002 INCHES   ZMRP  =   400.0000 INCHES                                 SRMPR  =      2.330   RUDDER =     10.000
SCALE =      .0190

                              RUN NO.   99/ 0    RN/L =   2.10    GRADIENT INTERVAL =  -5.00/  5.00

  MACH       BETA        CN        CLMF       CLM        CAF        CA        CY        CYN        CBL        CNW        CHW
  1.200     -6.080     .01580    -.03440    -.03000     .24789    .32486    .31960    -.14920     .05850     .29150    -.01850
  1.202     -3.050     .00920    -.02640    -.02170     .25187    .32909    .17260    -.09310     .03280     .22280    -.01230
  1.198       .000     .01650    -.02340    -.01910     .25746    .33473    .00520    -.01120     .00260     .15090    -.00820
  1.200      3.050    -.00200    -.01780    -.01300     .24467    .32250   -.15730     .06530    -.02580     .03970    -.00130
  1.198      6.080    -.00520    -.01950    -.01470     .23700    .32080   -.30930     .12310    -.05130    -.00780     .00450
           GRADIENT   -.00184     .00141     .00143    -.00118   -.00108   -.05408     .02597    -.00951    -.03002     .00180

                                   CALSPAN T14-053     01 T1 S1      IA36                        (RUF100)   ( 26 SEP 73  )

             REFERENCE DATA                                                                         PARAMETRIC DATA

SREF  =  2690.0004 FT.SQU   XMRP  =   953.0001 INCHES                                 BETA   =       .000   MPSRA  =       .000
LREF  =  1328.0002 INCHES   YMRP  =      .0000 INCHES                                 POWER  =       .000   RUDDER =     10.000
BREF  =  1328.0002 INCHES   ZMRP  =   400.0000 INCHES
SCALE =      .0190

                              RUN NO.  100/ 0    RN/L =   2.76    GRADIENT INTERVAL =  -5.00/  5.00

  MACH      ALPHA        CN        CLMF       CLM        CAF        CA        CY        CYN        CBL        CNW        CHW
   .901     -8.100    -.46930     .15210     .15620     .11049    .22170   -.01460     .00510     .00040    -.12200     .01190
   .900     -4.190    -.22680     .05670     .06060     .11778    .21559   -.01920     .00820    -.00040     .00980     .00290
   .899       .020     .01850    -.04340    -.03950     .11570    .21112   -.01770     .00680     .00030     .14280    -.00990
   .903      3.980     .23030    -.11660    -.11310     .11810    .20733   -.01620     .00560    -.00040     .25200    -.03010
   .899      6.010     .32720    -.14480    -.14130     .11195    .20055   -.01140     .00220    -.00070     .29230    -.03960
           GRADIENT    .05597    -.02124    -.02129     .00003   -.00101    .00037    -.00032     .00000     .02967    -.00403
```

```
                                CALSPAN T14-053     01 T1 S1     IA36                        (RUF101)   ( 26 SEP 73  )

             REFERENCE DATA                                                                 PARAMETRIC DATA

SREF  =  2690.0004 FT.SQU   XMRP  =   953.0001 INCHES                        ALPHA  =      .000   MPSRA  =     .000
LREF  =  1328.0002 INCHES   YMRP  =      .0000 INCHES                        POWER  =      .000   RUDDER =   10.000
BREF  =  1328.0002 INCHES   ZMRP  =   400.0000 INCHES
SCALE =      .0190

                         RUN NO.  101/ 0    RN/L =   2.75    GRADIENT INTERVAL =  -5.00/  5.00

  MACH       BETA        CN        CLMF        CLM         CAF         CA          CY         CYN         CBL         CNW         CHW
  .900     -6.080     .00040    -.03490    -.03090     .11684     .20649      .31780    -.15560      .05690      .22910    -.03980
  .901     -3.050     .01340    -.04160    -.03800     .12048     .20788      .16320    -.08700      .03170      .20740    -.02450
  .903       .000     .01830    -.04350    -.03990     .12528     .21312     -.01610     .00620      .00070      .15810    -.00750
  .902      3.050     .01200    -.04190    -.03300     .12006     .20935     -.16690     .07900     -.02370      .11180     .00460
  .903      6.090    -.00220    -.03330    -.02010     .11719     .20915     -.31490     .13850     -.04530      .05930     .01920
          GRADIENT   -.00023    -.00005     .00000    -.00007     .00029     -.05411     .02721     -.00908     -.01567     .00477

                                CALSPAN T14-053     01 T1 S1     IA36                        (RUF102)   ( 26 SEP 73  )

             REFERENCE DATA                                                                 PARAMETRIC DATA

SREF  =  2690.0004 FT.SQU   XMRP  =   953.0001 INCHES                        BETA   =      .000   MPSRA  =     .000
LREF  =  1328.0002 INCHES   YMRP  =      .0000 INCHES                        POWER  =     1.000   OPR    =   28.310
BREF  =  1328.0002 INCHES   ZMRP  =   400.0000 INCHES                        SRMPR  =     2.020   RUDDER =   10.000
SCALE =      .0190

                         RUN NO.  102/ 0    RN/L =   2.79    GRADIENT INTERVAL =  -5.00/  5.00

  MACH      ALPHA        CN        CLMF        CLM         CAF         CA          CY         CYN         CBL         CNW         CHW
  .899     -7.860    -.44780     .14350     .14890     .12276     .24087     -.01550     .00620     -.00090     -.12940     .01150
  .902     -4.040    -.20770     .04490     .05010     .13781     .23924     -.01830     .00900     -.00210      .00530     .00330
  .900      -.030     .02490    -.04850    -.04360     .13812     .23803     -.01600     .00700     -.00080      .13470    -.00770
  .903      4.110     .25120    -.12890    -.12410     .14336     .23101     -.01410     .00580     -.00220      .24830    -.03010
  .921      6.080     .32540    -.14590    -.14150     .15305     .23452     -.00940     .00230     -.00150      .28570    -.03640
          GRADIENT    .05630    -.02130    -.02136     .00068    -.00101      .00052    -.00039     -.00001      .02980    -.00411
```

```
                              CALSPAN T14-053     01 T1 S1     IA36                    (RUF103)   ( 26 SEP 73 )

           REFERENCE DATA                                                              PARAMETRIC DATA

SREF  =  2690.0004 FT.SQU   XMRP  =   953.0001 INCHES                    ALPHA  =      .000   MPSRA  =       .000
LREF  =  1328.0002 INCHES   YMRP  =      .0000 INCHES                    POWER  =     1.000   OPR    =     28.310
BREF  =  1328.0002 INCHES   ZMRP  =   400.0000 INCHES                    SRMPR  =     2.020   RUDDER =     10.000
SCALE =      .0190

                       RUN NO.  103/ 0    RN/L =   2.79    GRADIENT INTERVAL =  -5.00/  5.00

  MACH     BETA        CN        CLMF       CLM        CAF        CA         CY         CYN        CBL        CNW        CHW
  .905    -6.090     .00290    -.03580    -.03020    .13627     .23114     .32660    -.16220     .05730     .21770    -.04030
  .895    -3.050     .01760    -.04430    -.03890    .13179     .22919     .16730    -.09020     .03150     .19170    -.02740
  .906      .000     .03540    -.05410    -.04910    .17095     .26034    -.01550     .00700    -.00110     .15280    -.00840
  .900     3.060     .01410    -.04160    -.03620    .16114     .25096    -.17490     .08530    -.02630     .10850     .00550
  .895     6.090    -.00550    -.03080    -.02490    .14755     .24386    -.32460     .14460    -.04780     .04920     .01950
         GRADIENT   -.00058     .00044     .00044    .00480     .00356    -.05599     .02872    -.00946    -.01362     .00538

                              CALSPAN T14-053     01 T1 S1   OPR = 2.45 X NOM          (RUF104)   ( 26 SEP 73 )

           REFERENCE DATA                                                              PARAMETRIC DATA

SREF  =  2690.0004 FT.SQU   XMRP  =   953.0001 INCHES                    ALPHA  =      .000   MPSRA  =       .000
LREF  =  1328.0002 INCHES   YMRP  =      .0000 INCHES                    POWER  =     1.000   OPR    =     69.300
BREF  =  1328.0002 INCHES   ZMRP  =   400.0000 INCHES                    SRMPR  =     2.020   RUDDER =     10.000
SCALE =      .0190

                       RUN NO.  104/ 0    RN/L =   2.79    GRADIENT INTERVAL =  -5.00/  5.00

  MACH     BETA        CN        CLMF       CLM        CAF        CA         CY         CYN        CBL        CNW        CHW
  .907    -6.090     .00580    -.03950    -.03380    .14700     .23701     .33560    -.16700     .05810     .21870    -.03950
  .898    -3.050     .02410    -.05110    -.04510    .13608     .23191     .17270    -.09350     .03220     .20220    -.02630
  .898      .000     .02250    -.04730    -.04130    .13566     .23971    -.01470     .00690    -.00050     .14090    -.00640
  .899     3.060     .01910    -.04690    -.04080    .13956     .23451    -.17790     .08810    -.02780     .10940     .00540
  .895     6.090    -.00220    -.03380    -.02730    .12643     .22632    -.32670     .14660    -.04860     .05670     .01950
         GRADIENT   -.00082     .00069     .00070    .00057     .00042    -.05738     .02972    -.00982    -.01519     .00527
```

```
                                          CALSPAN T14-053      01 T1 S1      1A36                          (RUF105)   ( 25 SEP 73  )

            REFERENCE DATA                                                                                PARAMETRIC DATA

SREF  =  2690.0004 FT.SQU   XMRP  =   953.0001 INCHES                                      ALPHA   =      .000   MPSRA   =      .000
LREF  =  1328.0002 INCHES   YMRP  =      .0000 INCHES                                      POWER   =     1.000   OPR     =    35.200
BREF  =  1328.0002 INCHES   ZMRP  =   400.0000 INCHES                                      SRMPR   =     2.330   RUDDER  =      .000
SCALE =      .0190

                             RUN NO.  105/ 0    RN/L =   2.12    GRADIENT INTERVAL =  -5.00/  5.00

  MACH        BETA        CN          CLMF        CLM         CAF         CA          CY          CYN         CBL         CNW         CHW
  1.204      -6.080    -.00760     -.01620     -.01060      .25354      .34546      .31410     -.14430      .05480      .27500     -.01[illegible]
  1.201      -3.040     .00140     -.01740     -.01160      .25767      .34875      .16500     -.08460      .02830      .22720     -.01400
  1.202        .000     .01330     -.02160     -.01600      .26201      .35766     -.00370     -.00090     -.00180      .15830     -.00950
  1.135       3.05.    -.00220     -.01450     -.00850      .24940      .34289     -.16730      .07690     -.03070      .03230     -.00320
  1.205       6.080    -.00590     -.01520     -.00960      .24639      .33921     -.31620      .13420     -.05650     -.02520      .00170
           GRADIENT    -.00059      .00048      .00049     -.00136     -.00096     -.05456      .02652     -.00969     -.03201      .00177

                                          CALSPAN T14-053      01 T1 S1      1A36                          (RUF106)   ( 25 SEP 73  )

            REFERENCE DATA                                                                                PARAMETRIC DATA

SREF  =  2690.0004 FT.SQU   XMRP  =   953.0001 INCHES                                      ALPHA   =      .000   MPSRA   =      .000
LREF  =  1328.0002 INCHES   YMRP  =      .0000 INCHES                                      POWER   =      .000   RUDDER  =      .000
BREF  =  1328.0002 INCHES   ZMRP  =   400.0000 INCHES
SCALE =      .0190

                             RUN NO.  106/ 0    RN/L =   2.11    GRADIENT INTERVAL =  -5.00/  5.00

  MACH        BETA        CN          CLMF        CLM         CAF         CA          CY          CYN         CBL         CNW         CHW
  1.206      -6.080    -.00630     - 01390     -.00790      .25277      .36902      .32140     -.14870      .05580      .27240     -.02060
  1.205      -3.050    -.00070     -.01420     -.00820      .25827      .37288      .16680     -.08580      .02820      .21560     -.01490
  1.204        .000     0.320      -.01930     -.01350      .26605      .38074     -.00290     -.00170     -.00200      .14780     -.01070
  1.204       3.050    -.00170     -.01370     -.00760      .25552      .36480     -.15880      .07360     -.02960      .02910     -.00500
  1.204       6.090    -.00860     -.01330     -.00720      .25115      .36313     -.31790      .13640     -.05680     -.04320     -.00050
           GRADIENT    -.00016      .00005      .00010     -.00045     -.00132     -.05336      .02613     -.00948     -.03057      .00162
```

```
                                         CALSPAN T14-053     01 TI SI     IA36                         (RUF107)   ( 25 SEP 73  )

               REFERENCE DATA                                                                      PARAMETRIC DATA

SREF  =  2690.0004 FT.SQU   XMRP  =   953.0001 INCHES                              ALPHA  =      .000   MPSRA  =       .000
LREF  =  1328.0002 INCHES   YMRP  =      .0000 INCHES                              POWER  =      .000   RUDDER =       .000
BREF  =  1328.0002 INCHES   ZMRP  =   400.0000 INCHES
SCALE =       .0190

                           RUN NO.  107/ 0    RN/L =   2.75    GRADIENT INTERVAL =  -5.00/  5.00

  MACH      BETA        CN        CLMF       CLM        CAF        CA         CY         CYN        CBL        CNW        CHW
  .906     -6.080     .00380    -.03860    -.03480     .11092     .20313     .29530    -.13340     .04750     .21830    -.03840
  .911     -3.050     .02340    -.05170    -.04820     .11924     .21045     .15080    -.07350     .02450     .20380    -.02240
  .900       .000     .02090    -.04560    -.04190     .11412     .21255    -.02820     .01800    -.00400     .14330    -.00820
  .901      3.050     .01170    -.04250    -.03860     .11603     .20738    -.17430     .08710    -.02700     .09940     .00430
  .903      6.090    -.00060    -.03480    -.03020     .10901     .21030    -.32630     .15020    -.05020     .05110     .01900
         GRADIENT    -.00192     .00151     .00157    -.00053    -.00050    -.05330     .02633    -.00844    -.01711     .00439

                                         CALSPAN T14-053     01 TI SI     IA36                         (RUF108)   ( 26 SEP 73  )

               REFERENCE DATA                                                                      PARAMETRIC DATA

SREF  =  2690.0004 FT.SQU   XMRP  =   953.0001 INCHES                              ALPHA  =      .000   MPSRA  =       .000
LREF  =  1328.0002 INCHES   YMRP  =      .0000 INCHES                              POWER  =     1.000   OPR    =     28.310
BREF  =  1328.0002 INCHES   ZMRP  =   400.0000 INCHES                              SRMPR  =     2.020   RUDDER =       .000
SCALE =       .0190

                           RUN NO.  108/ 0    RN/L =   2.77    GRADIENT INTERVAL =  -5.00/  5.00

  MACH      BETA        CN        CLMF       CLM        CAF        CA         CY         CYN        CBL        CNW        CHW
  .902     -6.080     .00740    -.04040    -.03510     .12281     .22111     .30710    -.14100     .04820     .22810    -.04230
  .890     -3.050     .02050    -.04720    -.04170     .11051     .21785     .15480    -.07580     .02560     .18570    -.02870
  .900       .000     .03150    -.05180    -.04670     .13887     .23650    -.02300     .01430    -.00350     .15170    -.00820
  .895      3.060     .01990    -.04640    -.04000     .12909     .22814    -.18140     .09040    -.02820     .10930     .00440
  .902      6.090     .00000    -.03370    -.02750     .12755     .22779    -.33050     .15140    -.05080     .05770     .01990
         GRADIENT    -.00010     .00013     .00015     .00304     .00168    -.05502     .02720    -.00880    -.01273     .00542
```

```
                                   CALSPAN T14-053      01 T1 S1      IA36                      (RUF109)     ( 26 SEP 73   )
                REFERENCE DATA
                                                                                                        PARAMETRIC DATA
SREF  =  2690.0004 FT.SQU   XMRP  =    953.0001 INCHES                                 BETA    =      .000   MPSRA   =      .000
LREF  =  1328.0002 INCHES   YMRP  =       .0000 INCHES                                 POWER   =     1.000   OPR     =    36.200
BREF  =  1328.0002 INCHES   ZMRP  =    400.0000 INCHES                                 SRMPR   =     2.330   RUDDER  =      .000
SCALE =      .0190

                       RUN NO.   109/ 0     RN/L =    2.07     GRADIENT INTERVAL =   -5.00/  5.00

  MACH        ALPHA        CN        CLMF        CLM         CAF         CA          CY         CYN        CBL        CNW        CHW
  1.201        -.120     .01290    -.02440    -.01980     .26078     .34957    -.00530     .00090    -.00200     .13770    -.00930
  1.201        4.040     .25020    -.11540    -.11010     .25680     .33955    -.01460     .01 20    -.00370     .25500    -.011[illegible]
  1.203        5.920     .35570    -.15400    -.14870     .25847     .33527    -.00890     .00830    -.00390     .31920    -.01340
            GRADIENT     .05704    -.02188    -.02171    -.00096    -.00241    -.00209     .00272    -.00041     .02820    -.00043

                                   CALSPAN T14-053      01 T1 S1      IA36                      (RUF110)     ( 26 SEP 73   )
                REFERENCE DATA
                                                                                                        PARAMETRIC DATA
SREF  =  2690.0004 FT.SQU   XMRP  =    953.0001 INCHES                                 ALPHA   =      .000   MPSRA   =      .000
LREF  =  1328.0002 INCHES   YMRP  =       .0000 INCHES                                 POWER   =     1.000   OPR     =    36.200
BREF  =  1328.0002 INCHES   ZMRP  =    400.0000 INCHES                                 SRMPR   =     2.330   RUDDER  =      .000
SCALE =      .0190

                       RUN NO.   110/ 0     RN/L =     .16     GRADIENT INTERVAL =   -5.00/  5.00

  MACH         BETA        CN        CLMF        CLM         CAF         CA          CY         CYN        CBL        CNW        CHW
  1.199       -6.080    -.00740    -.01900    -.01390     .25175     .33959     .30900    -.13820     .05330     .27450    -.02010
  1.204       -3.040    -.00460    -.01490    -.01000     .25211     .33997     .15980    -.07900     .02670     .21710    -.01310
  1.204         .000     .00260    -.01720    -.01280     .25961     .34764    -.01690     .01150    -.00340     .13960    -.00890
  1.207        3.050    -.00490    -.01590    -.01100     .25091     .33771    -.16330     .07620    -.02980     .02690    -.00250
  1.196        6.090    -.01450    -.01400    -.00910     .24464     .33452    -.31320     .13520    -.05590    -.02880     .00[illegible]
            GRADIENT    -.00005    -.00016    -.00016    -.00020    -.00037    -.05305     .02548    -.00928    -.03123     .00174
```

```
                                   CALSPAN T14-053     01 T1 S1     IA36                     (RUF111)   ( 26 SEP 73  )

              REFERENCE DATA                                                                 PARAMETRIC DATA

SREF  =  2690.0004 FT.SQU   XMRP  =   953.0001 INCHES                             BETA   =     .000   MPSRA  =     .000
LREF  =  1328.0002 INCHES   YMRP  =      .0000 INCHES                             POWER  =    1.000   OPR    =   28.310
BREF  =  1328.0002 INCHES   ZMRP  =   400.0000 INCHES                             SRMPR  =    2.020   RUDDER =     .000
SCALE =      .0190

                          RUN NO.  111/ 0   RN/L =   2.69   GRADIENT INTERVAL =  -5.00/  5.00

  MACH      ALPHA      CN        CLMF       CLM       CAF        CA        CY        CYN       CBL       CNW       CHW
  .901     -8.110   -.46980    .15250    .15810    .11630    .24555   -.02920    .01690   -.00410   -.14210    .01290
  .902     -4.120   -.21570    .04830    .05370    .13157    .24477   -.03190    .02040   -.00560   -.00210    .00500
  .904      -.100    .01150   -.04010   -.03490    .13443    .24280   -.02810    .01780   -.00410    .13790   -.00530
  .902      3.970    .23480   -.12200   -.11700    .12637    .22983   -.02580    .01510   -.00530    .24580   -.02900
  .902      5.990    .34240   -.15830   -.15320    .12691    .22641   -.01640    .01030   -.00520    .28300   -.04050
          GRADIENT   .05568   -.02105   -.02110   -.00065   -.00185    .00075   -.00053    .00004    .03063   -.00421

                                   CALSPAN T14-053     01 T1 S1     IA36                     (RUF112)   ( 26 SEP 73  )

              REFERENCE DATA                                                                 PARAMETRIC DATA

SREF  =  2690.0004 FT.SQU   XMRP  =   953.0001 INCHES                             ALPHA  =     .000   MPSRA  =     .000
LREF  =  1328.0002 INCHES   YMRP  =      .0000 INCHES                             POWER  =    1.000   OPR    =   28.310
BREF  =  1328.0002 INCHES   ZMRP  =   400.0000 INCHES                             SRMPR  =    2.020   RUDDER =     .000
SCALE =      .0190

                          RUN NO.  112/ 0   RN/L =   2.65   GRADIENT INTERVAL =  -5.00/  5.00

  MACH      BETA       CN        CLMF       CLM       CAF        CA        CY        CYN       CBL       CNW       CHW
  .903     -6.060   -.00100   -.03390   -.02840    .12925    .23271    .31000   -.14210    .04890    .21360   -.04070
  .904     -3.050    .01320   -.04450   -.03930    .13426    .23930    .15420   -.07540    .02520    .19450   -.02410
  .901       .000    .02470   -.05020   -.04510    .13524    .23973   -.02930    .01870   -.00450    .14260   -.00640
  .900      3.050    .00900   -.03740   -.03190    .13468    .23456   -.18290    .09400   -.02870    .10620    .00720
  .901      6.090   -.00090   -.03560   -.02970    .12449    .23106   -.33660    .15770   -.05200    .04220    .02090
          GRADIENT  -.00069    .00116    .00121    .00007   -.00078   -.05526    .02777   -.00884   -.01448    .00513
```

```
                                   CALSPAN T14-053     01 T1 S1     IA36                    (RUF113)   ( 26 SEP 73  )

          REFERENCE DATA                                                                     PARAMETRIC DATA

SREF  =  2690.0004 FT.SQU   XMRP  =   953.0001 INCHES                       BETA   =      .000   MPSRA  =      .000
LREF  =  1328.0002 INCHES   YMRP  =      .0000 INCHES                       POWER  =     1.000   OPR    =    36.200
BREF  =  1328.0002 INCHES   ZMRP  =   400.0000 INCHES                       SRMPR  =     2.330   RUDDER =      .000
SCALE =      .0190

                         RUN NO.  113/ 0    RN/L =   2.06    GRADIENT INTERVAL =  -5.00/  5.00

  MACH      ALPHA       CN        CLMF       CLM        CAF        CA         CY         CYN        CBL        CNW        CHW
  1.204    -8.030    -.50280    .18730     .19450     .25429     .36393    -.00630     .00000    -.00180    -.17310    -.00010
  1.207    -4.010    -.23350    .08460     .09140     .26891     .36319    -.01250     .00250    -.00290     .00040    -.00350
  1.207      .010     .01220   -.01900    -.01230     .27220     .36110    -.01450     .00500    -.00320     .15440    -.00800
  1.199     3.950     .25050   -.11540    -.10860     .25826     .33779    -.02020     .01440    -.00490     .26470    -.00970
  1.203     6.000     .36600   -.16080    -.15420     .26005     .33200    -.01520     .01140    -.00510     .33410    -.01240
         GRADIENT     .06050   -.02550    -.02500    -.00133    -.00317    -.00096     .00149    -.00025     .03305    -.00078

                                   CALSPAN T14-053     01 T1 S1     IA36                    (RUF114)   ( 26 SEP 73  )

          REFERENCE DATA                                                                     PARAMETRIC DATA

SREF  =  2690.0004 FT.SQU   XMRP  =   953.0001 INCHES                       ALPHA  =      .000   MPSRA  =      .000
LREF  =  1328.0002 INCHES   YMRP  =      .0000 INCHES                       POWER  =     1.000   OPR    =    36.200
BREF  =  1328.0002 INCHES   ZMRP  =   400.0000 INCHES                       SRMPR  =     2.330   RUDDER =      .000
SCALE =      .0190

                         RUN NO.  114/ 0    RN/L =   2.05    GRADIENT INTERVAL =  -5.00/  5.00

  MACH      BETA        CN        CLMF       CLM        CAF        CA         CY         CYN        CBL        CNW        CHW
  1.208    -6.070    -.00720   -.01560    -.00870     .25952     .34647     .31000    -.14280     .05500     .28490    -.01910
  1.203    -3.040     .02470   -.03270    -.02560     .26044     .34821     .15540    -.07930     .02740     .23290    -.01330
  1.198      .000     .01400   -.01930    -.01320     .26778     .35941    -.01050     .00320    -.00270     .15610    -.00870
  1.203     3.050     .00640   -.02020    -.01320     .25605     .34391    -.17070     .08140    -.03150     .04140    -.00180
  1.203     6.080    -.00080   -.02070    -.01370     .25063     .34106    -.32210     .14180    -.05840    -.01520     .00410
         GRADIENT    -.00300    .00205     .00204    -.00072    -.00071    -.05355     .02639    -.00957    -.03145     .00189
```

CALSPAN T14-053 01 T1 S1 IA36 (RUF115) (26 SEP 73)

REFERENCE DATA

SREF = 2690.0004 FT.SQU XMRP = 953.0001 INCHES
LREF = 1328.0002 INCHES YMRP = .0000 INCHES
BREF = 1328.0002 INCHES ZMRP = 400.0000 INCHES
SCALE = .0190

PARAMETRIC DATA

BETA = .000 MPSRA = .000
POWER = 1.000 OPR = 28.310
SRMPR = 2.020 RUDDER = .000

RUN NO. 115/ 0 RN/L = 2.68 GRADIENT INTERVAL = -5.00/ 5.00

MACH	ALPHA	CN	CLMF	CLM	CAF	CA	CY	CYN	CBL	CNW	CHW
.901	-8.060	-.44560	.13540	.14250	.12998	.26278	-.02700	.01540	-.00300	-.12770	.01550
.903	-3.970	-.18970	.03290	.03990	.13932	.25799	-.02850	.01840	-.00460	.01510	.00710
1.030	.070	.05530	-.07350	-.05730	.14022	.25144	-.02900	.01820	-.00480	.15330	-.00590
.901	4.020	.26310	-.14220	-.13570	.13259	.23971	-.02770	.01810	-.00560	.25250	-.02860
.900	5.990	.36470	-.17470	-.16830	.13013	.23635	-.02230	.01390	-.00580	.29920	-.03890
	GRADIENT	.05669	-.02193	-.02199	-.00054	-.00228	.00010	-.00004	-.00012	.02973	-.00445

CALSPAN T14-053 01 T1 S1 IA36 (RUF116) (26 SEP 73)

REFERENCE DATA

SREF = 2690.0004 FT.SQU XMRP = 953.0001 INCHES
LREF = 1328.0002 INCHES YMRP = .0000 INCHES
BREF = 1328.0002 INCHES ZMRP = 400.0000 INCHES
SCALE = .0190

PARAMETRIC DATA

ALPHA = .000 MPSRA = .000
POWER = 1.000 OPR = 28.310
SRMPR = 2.020 RUDDER = .000

RUN NO. 116/ 0 RN/L = 2.69 GRADIENT INTERVAL = -5.00/ 5.00

MACH	BETA	CN	CLMF	CLM	CAF	CA	CY	CYN	CBL	CNW	CHW
.900	-6.080	.02620	-.05420	-.04730	.13087	.24138	.31690	-.14800	.05040	.23030	-.04010
.902	-3.050	.01870	-.04350	-.03700	.14025	.24872	.14600	-.07090	.02430	.21460	-.02450
.899	.000	.05140	-.07020	-.06330	.13660	.24971	-.03120	.02030	-.00480	.15500	-.00620
.899	3.060	.04270	-.05690	-.05960	.13702	.24515	-.19020	.09840	-.03010	.10930	.00790
.901	6.090	.02500	-.05480	-.04750	.13184	.24323	-.34060	.16180	-.05400	.05030	.02200
	GRADIENT	.00392	-.00393	-.00370	-.00118	-.00058	-.05502	.02771	-.00890	-.01723	.00530

```
                                   CALSPAN T14-053     01 T1 S1      IA36                     (RUF117)   ( 26 SEP 73  )

               REFERENCE DATA                                                                  PARAMETRIC DATA

SREF  =  2690.0004 FT.SQU   XMRP  =    953.0001 INCHES                              BETA   =      .000  MPSRA  =     .000
LREF  =  1328.0002 INCHES   YMRP  =       .0000 INCHES                              POWER  =      .000  RUDDER =     .000
BREF  =  1328.0002 INCHES   ZMRP  =    400.0000 INCHES
SCALE =       .0190

                        RUN NO.  117/ 0    RN/L =   2.13    GRADIENT INTERVAL =  -5.00/  5.00

  MACH      ALPHA       CN        CLMF       CLM        CAF        CA         CY         CYN        CBL        CNW        CHN
  1.205     -8.090    -.52290    .19940     .20520     .24622     .38034     .00440    -.00730    -.00040    -.17690    -.00300
  1.178     -6.110    -.37920    .14320     .14910     .24932     .38188     .00310    -.00650    -.00110    -.09130    -.00450
  1.206     -4.070    -.24400    .08980     .09560     .25727     .38040     .00590    -.00680    -.00120    -.00360    -.00610
  1.205     -2.010    -.11190    .03350     .03940     .25555     .38171     .00230    -.00480    -.00140     .07790    -.00840
  1.205      -.030     .00890   -.01680    -.01090     .25745     .37958    -.00360    -.00160    -.00210     .14960    -.01070
  1.200      2.030     .13120   -.06420    -.05830     .25588     .37469    -.00210    -.00130    -.00240     .21710    -.01300
  1.205      4.000     .24640   -.10830    -.10220     .24930     .36266    -.00780     .00470    -.00340     .26140    -.01190
  1.203      5.950     .35580   -.15110    -.14510     .24855     .35772    -.00760     .00700    -.00450     .32710    -.01460
  1.203      7.990     .47000   -.19480    -.18880     .24498     .35035    -.00470     .00510    -.00480     .37990    -.01650
          GRADIENT     .06065   - 02448    -.02445    -.00031    -.00210    -.00157     .00131    -.00027     .03318    -.00081

                                   CALSPAN T14-053     01 T1 S1      IA36                     (RUF118)   ( 26 SEP 73  )

               REFERENCE DATA                                                                  PARAMETRIC DATA

SREF  =  2690.0004 FT.SQU   XMRP  =    953.0001 INCHES                              ALPHA  =      .000  MPSRA  =     .000
LREF  =  1328.0002 INCHES   YMRP  =       .0000 INCHES                              POWER  =      .000  RUDDER =     .000
BREF  =  1328.0002 INCHES   ZMRP  =    400.0000 INCHES
SCALE =       .0190

                        RUN NO.  118/ 0    RN/L =   2.12    GRADIENT INTERVAL =  -5.00/  5.00

  MACH      BETA        CN        CLMF       CLM        CAF        CA         CY         CYN        CBL        CNW        CHN
  1.207     -8.080    -.05050    .00170     .00780     .24019     .36675     .42420    -.18540     .07080     .29200    -.02350
  1.204     -6.060    -.00820   -.01340    -.00740     .24398     .36783     .32490    -.14980     .05590     .29110    -.02160
  1.205     -4.030    -.00630   -.01280    -.00670     .24645     .36952     .22140    -.10820     .03810     .24960    -.01780
  1.205     -3.040    -.00260   -.01370    -.00780     .24873     .37133     .17240    -.08740     .02910     .22970    -.01560
  1.204     -2.020     .00030   -.01510    -.00910     .25137     .37412     .11840    -.06340     .01940     .20950    -.01330
  1.202       .000     .00960   -.01790    -.01200     .25558     .37867     .00210    -.00430    -.00130     .15970    -.01130
  1.203      2.020    -.00470   -.01150    -.00540     .25142     .36898    -.10820     .05160    -.02060     .07330    -.00580
  1.204      3.040    -.00750   -.01050    -.00460     .24706     .36460    -.16350     .07540    -.03010     .03660    -.00540
  1.205      4.030    -.01350   -.00890    -.00280     .24500     .36276    -.20470     .09280    -.03800     .00410    -.00430
  1.205      6.060    -.01190   -.01160    -.00550     .24078     .36162    -.31520     .13570    -.05630    -.03510    -.00100
  1.206      8.090    -.01540   -.01190    -.00570     .23822     .36218    -.41310     .17080    -.07110    -.06270     .00200
          GRADIENT    -.00091    .00055     .00056    -.00018    -.00098    -.05406     .02600    -.00960    -.03131     .00170
```

```
DATE 05 NOV 75            TABULATED DATA FOR CAL T14-053 (IA36)

                                    CALSPAN T14-053     01 T1 S1      IA36                          (RUF119)    ( 26 SEP 73  )

              REFERENCE DATA                                                                            PARAMETRIC DATA

SREF  =  2690.0004 FT.SQU   XMRP  =   953.0001 INCHES                                 BETA   =       .000   MPSRA  =       .000
LREF  =  1328.0002 INCHES   YMRP  =      .0000 INCHES                                 POWER  =       .000   RUDDER =       .000
BREF  =  1328.0002 INCHES   ZMRP  =   400.0000 INCHES
SCALE =        .0190

                            RUN NO.   119/ 0    RN/L  =   2.79    GRADIENT INTERVAL  =  -5.00/  5.00

  MACH       ALPHA       CN         CLMF        CLM         CAF         CA          CY          CYN         CBL         CNW         CHW
   .902     -6.140    -.34110     .10360      .10860      .11828      .23826    -.01820      .01200    -.00280    -.05480      .01020
   .903     -4.040    -.21100     .04840      .05330      .12136      .23840    -.02370      .01560    -.00420     .01480      .00600
   .902     -2.060    -.09120    -.00270      .00180      .12464      .23683    -.02290      .01520    -.00370     .08550      .00070
   .903       .010     .02650    -.05010     -.04550      .12381      .23391    -.01900      .01230    -.00330     .14940     -.00680
   .902      2.010     .13390    -.08760     -.08320      .12071      .22709    -.01820      .01160    -.00390     .19850     -.01920
   .902      4.000     .23720    -.12270     -.11840      .11789      .22040    -.01620      .01090    -.00410     .25260     -.03000
   .905      6.020     .33350    -.15090     -.14670      .11594      .21894    -.01160      .00750    -.00460     .29250     -.04000
   .902      7.990     .43550    -.18740     -.18310      .11264      .21492    -.01370      .00930    -.00420     .34180     -.04540
          GRADIENT     .05566    -.02120     -.02126     -.00054     -.00227     .00098     -.00065      .00000     .02923     -.00456

                                    CALSPAN T14-053     01 T1 S1      IA36                          (RUF120)    ( 26 SEP 73  )

              REFERENCE DATA                                                                            PARAMETRIC DATA

SREF  =  2690.0004 FT.SQU   XMRP  =   953.0001 INCHES                                 ALPHA  =       .000   MPSRA  =       .000
LREF  =  1328.0002 INCHES   YMRP  =      .0000 INCHES                                 POWER  =       .000   RUDDER =       .000
BREF  =  1328.0002 INCHES   ZMRP  =   400.0000 INCHES
SCALE =        .0190

                            RUN NO.   120/ 0    RN/L  =    .21    GRADIENT INTERVAL  =  -5.00/  5.00

  MACH       BETA        CN         CLMF        CLM         CAF         CA          CY          CYN         CBL         CNW         CHW
   .904     -8.090    -.04440    -.01680     -.01140      .11334      .22413     .41810     -.18580      .06430     .21470     -.04710
   .902     -5.070     .00620    -.03930     -.03430      .11600      .22290     .31510     -.14420      .05000     .22650     -.04070
   .902     -4.040     .01420    -.04490     -.04030      .11941      .22292     .21370     -.10090      .03440     .21460     -.02960
   .903     -3.040     .01780    -.04620     -.04170      .12136      .22575     .16020     -.07710      .02600     .21220     -.02510
   .901     -2.030     .02250    -.04820     -.04370      .12363      .22712     .10640     -.05240      .01680     .20170     -.01950
   .900      2.030     .02260    -.04920     -.04450      .12265      .22523    -.11820      .06280     -.01830     .13370      .00070
   .903      3.040     .01850    -.04760     -.04260      .11739      .22447    -.17400      .08740     -.02700     .11300      .00630
   .903      4.040     .01060    -.04230     -.03730      .12210      .22728    -.22200      .10810     -.03450     .09510      .01220
   .903      6.070     .00160    -.03560     -.03010      .11481      .22455    -.32880      .15300     -.05110     .05590      .02040
   .900      8.100    -.01440    -.02630     -.02030      .10685      .22219    -.42910      .19320     -.06640     .02210      .02700
          GRADIEN     -.00021     .00007      .00013     -.00075      .00017    -.05444      .02658     -.00860    -.01554      .00515
```

```
                                         CALSPAN T14-053      02 T1 S1      IA36                           (SUF073)   ( 14 NOV 73  )

                  REFERENCE DATA                                                                             PARAMETRIC DATA

SREF  =  2690.0004 FT.SQU   XMRP  =   953.0001 INCHES                                            BETA   =       .000   DOPR   =     28.310
LREF  =  1328.0002 INCHES   YMRP  =      .0000 INCHES                                            DSRMPR =      2.020
BREF  =  1328.0002 INCHES   ZMRP  =   400.0000 INCHES
SCALE =       .0190

                                      RN/L  =   2.67   GRADIENT INTERVAL  =  -5.00/  5.00

          MACH   =     .900
                     ALPHA      DCAF       DCAB       DCN       DCLMF       CAF        CAB        CN        CLMF
                      .000     .01492     .00960     .00170     .00075     .11637     .09433     .01990    -.04575
                   GRADIENT    .00000     .00000     .00000     .00000     .00000     .00000     .00000     .00000

                                         CALSPAN T14-053      02 T1 S1      IA36                           (SUF077)   ( 14 NOV 73  )

                  REFERENCE DATA                                                                             PARAMETRIC DATA

SREF  =  2690.0004 FT.SQU   XMRP  =   953.0001 INCHES                                            BETA   =       .000   DOPR   =     36.200
LREF  =  1328.0002 INCHES   YMRP  =      .0000 INCHES                                            DSRMPR =      2.330
BREF  =  1328.0002 INCHES   ZMRP  =   400.0000 INCHES
SCALE =       .0190

                                      RN/L  =   2.02   GRADIENT INTERVAL  =  -5.00/  5.00

          MACH   =    1.200
                     ALPHA      DCAF       DCAB       DCN       DCLMF       CAF        CAB        CN        CLMF
                      .000     .00777    -.02176     .00958    -.00730     .25228     .12272     .00580    -.01609
                   GRADIENT    .00000     .00000     .00000     .00000     .00000     .00000     .00000     .00000

                                         CALSPAN T14-053      01 T1 S1      IA36                           (SUF083)   ( 14 NOV 73  )

                  REFERENCE DATA                                                                             PARAMETRIC DATA

SREF  =  2690.0004 FT.SQU   XMRP  =   953.0001 INCHES                                            BETA   =       .000   DOPR   =     36.200
LREF  =  1328.0002 INCHES   YMRP  =      .0000 INCHES                                            DSRMPR =      2.330
BREF  =  1328.0002 INCHES   ZMRP  =   400.0000 INCHES
SCALE =       .0190

                                      RN/L  =   2.09   GRADIENT INTERVAL  =  -5.00/  5.00

          MACH   =    1.200
                     ALPHA      DCAF       DCAB       DCN       DCLMF       CAF        CAB        CN        CLMF
                      .000     .00597    -.02615     .01371    -.00995     .25228     .12272     .00580    -.01609
                   GRADIENT    .00000     .00000     .00000     .00000     .00000     .00000     .00000     .00000
```

```
                                      CALSPAN T14-053     01 T1 S1  OPR = 2.65 X NOM                    (SUF085)   ( 14 NOV 73  )

              REFERENCE DATA                                                                          PARAMETRIC DATA

SREF  =  2690.0004 FT.SQU   XMRP  =   953.0001 INCHES                                    BETA    =       .000   DOPR    =      95.800
LREF  =  1328.0002 INCHES   YMRP  =      .0000 INCHES                                    DSRMPR  =      2.330
BREF  =  1328.0002 INCHES   ZMRP  =   400.0000 INCHES
SCALE =      .0190

                                    RN/L  =    2.06   GRADIENT INTERVAL  =  -5.00/  5.00

          MACH   =   1.200
                    ALPHA       DCAF        DCAB        DCN        DCLMF        CAF         CAB         CN         CLMF
                      .000     .00086     -.04023     .01835     -.01566      .25228      .12272      .00580     -.01609
                  GRADIENT     .00000      .00000     .00000      .00000      .00000      .00000      .00000      .00000

                                      CALSPAN T14-053     01 T1 S1  OPR = 1.84 X NOM                    (SUF086)   ( 14 NOV 73  )

              REFERENCE DATA                                                                          PARAMETRIC DATA

SREF  =  2690.0004 FT.SQU   XMRP  =   953.0001 INCHES                                    BETA    =       .000   DOPR    =      66.700
LREF  =  1328.0002 INCHES   YMRP  =      .0000 INCHES                                    DSRMPR  =      2.330
BREF  =  1328.0002 INCHES   ZMRP  =   400.0000 INCHES
SCALE =      .0190

                                    RN/L  =    2.01   GRADIENT INTERVAL  =  -5.00/  5.00

          MACH   =   1.200
                    ALPHA       DCAF        DCAB        DCN        DCLMF        CAF         CAB         CN         CLMF
                      .000     .00731     -.03208     .01543     -.01032      .25228      .12272      .00580     -.01609
                  GRADIENT     .00000      .00000     .00000      .00000      .00000      .00000      .00000      .00000

                                      CALSPAN T14-053     01 T1 S1  SRMPR=1.36 X NOM                    (SUF087)   ( 14 NOV 73  )

              REFERENCE DATA                                                                          PARAMETRIC DATA

SREF  =  2690.0004 FT.SQU   XMRP  =   953.0001 INCHES                                    BETA    =       .000   DOPR    =      36.200
LREF  =  1328.0002 INCHES   YMRP  =      .0000 INCHES                                    DSRMPR  =      2.330
BREF  =  1328.0002 INCHES   ZMRP  =   400.0000 INCHES
SCALE =      .0190

                                    RN/L  =    2.06   GRADIENT INTERVAL  =  -5.00/  5.00

          MACH   =   1.200
                    ALPHA       DCAF        DCAB        DCN        DCLMF        CAF         CAB         CN         CLMF
                      .000     .00357     -.05249     .01713     -.01598      .25228      .12272      .00580     -.01609
                  GRADIENT     .00000      .00000     .00000      .00000      .00000      .00000      .00000      .00000
```

```
                                  CALSPAN T14-053     01 T1 S1     IA36                           (SUF090)   ( 14 NOV 73  )

            REFERENCE DATA                                                                       PARAMETRIC DATA

SREF  =  2690.0004 FT.SQU   XMRP  =   953.0001 INCHES                               BETA    =      .000   DOPR   =    28.310
LREF  =  1328.0002 INCHES   YMRP  =      .0000 INCHES                               DSRMPR  =     2.020
BREF  =  1328.0002 INCHES   ZMRP  =   400.0000 INCHES
SCALE =      .0190

                                  RN/L  =   2.69   GRADIENT INTERVAL  =  -5.00/  5.00

        MACH   =     .900
                   ALPHA       DCAF       DCAB       DCN        DCLMF       CAF        CAB        CN        CLMF
                     .000     .01840     .00164    -.00202     .00266     .11637     .09433     .01990    -.04575
                 GRADIENT     .00000     .00000     .00000     .00000     .00000     .00000     .00000     .00000

                                  CALSPAN T14-053     01 T1 S1   OPR  =  2.5 X NOM                (SUF092)   ( 14 NOV 73  )

            REFERENCE DATA                                                                       PARAMETRIC DATA

SREF  =  2690.0004 FT.SQU   XMRP  =   953.0001 INCHES                               BETA    =      .000   DOPR   =    70.500
LREF  =  1328.0002 INCHES   YMRP  =      .0000 INCHES                               DSRMPR  =     2.020
BREF  =  1328.0002 INCHES   ZMRP  =   400.0000 INCHES
SCALE =      .0190

                                  RN/L  =   2.70   GRADIENT INTERVAL  =  -5.00/  5.00

        MACH   =     .900
                   ALPHA       DCAF       DCAB       DCN        DCLMF       CAF        CAB        CN        CLMF
                     .000     .02423     .00337     .00936    -.00761     .11637     .09433     .01990    -.04575
                 GRADIENT     .00000     .00000     .00000     .00000     .00000     .00000     .00000     .00000

                                  CALSPAN T14-053     01 T1 S1   OPR  =  1.72 X NOM               (SUF093)   ( 14 NOV 73  )

            REFERENCE DATA                                                                       PARAMETRIC DATA

SREF  =  2690.0004 FT.SQU   XMRP  =   953.0001 INCHES                               BETA    =      .000   DOPR   =    48.600
LREF  =  1328.0002 INCHES   YMRP  =      .0000 INCHES                               DSRMPR  =     2.020
BREF  =  1328.0002 INCHES   ZMRP  =   400.0000 INCHES
SCALE =      .0190

                                  RN/L  =   2.70   GRADIENT INTERVAL  =  -5.00/  5.00

        MACH   =     .900
                   ALPHA       DCAF       DCAB       DCN        DCLMF       CAF        CAB        CN        CLMF
                     .000     .01849     .00319     .00811    -.00734     .11637     .09433     .01990    -.04575
                 GRADIENT     .00000     .00000     .00000     .00000     .00000     .00000     .00000     .00000
```

```
                                         CALSPAN T14-053     01 T1 S1  SRMPA = 1.2 X NOM              (SUF094)   ( 14 NOV 73  )

              REFERENCE DATA                                                                              PARAMETRIC DATA

SREF  =  2690.0004 FT.SQU   XMRP  =   953.0001 INCHES                                          BETA    =      .000   DOPR    =     28.310
LREF  =  1328.0002 INCHES   YMRP  =      .0000 INCHES                                          DSRMPR  =     2.400
BREF  =  1328.0002 INCHES   ZMRP  =   400.0000 INCHES
SCALE =       .0190

                                        RN/L  =   2.68   GRADIENT INTERVAL  =  -5.00/  5.00

         MACH    =    .900
                    ALPHA        DCAF        DCAB        DCN        DCLMF        CAF        CAB        CN        CLMF
                      .000      .01829     -.01678     .00388     -.00435     .11637     .09433     .01990    -.04575
                  GRADIENT      .00000      .00000     .00000      .00000     .00000     .00000     .00000     .00000

                                         CALSPAN T14-053     01 T1 S1      IA36                       (SUF097)   ( 14 NOV 73  )

              REFERENCE DATA                                                                              PARAMETRIC DATA

SREF  =  2690.0004 FT.SQU   XMRP  =   953.0001 INCHES                                          BETA    =      .000   DOPR    =     36.200
LREF  =  1328.0002 INCHES   YMRP  =      .0000 INCHES                                          DSRMPR  =     2.330
BREF  =  1328.0002 INCHES   ZMRP  =   400.0000 INCHES
SCALE =       .0190

                                        RN/L  =   2.11   GRADIENT INTERVAL  =  -5.00/  5.00

         MACH    =   1.200
                    ALPHA        DCAF        DCAB        DCN        DCLMF        CAF        CAB        CN        CLMF
                      .000     -.00801     -.02237     .00810     -.00322     .26183     .11759     .00931    -.01628
                  GRADIENT      .00000      .00000     .00000      .00000     .00000     .00000     .00000     .00000

                                         CALSPAN T14-053     01 T1 S1      IA36                       (SUF102)   ( 14 NOV 73  )

              REFERENCE DATA                                                                              PARAMETRIC DATA

SREF  =  2690.0004 FT.SQU   XMRP  =   953.0001 INCHES                                          BETA    =      .000   DOPR    =     28.310
LREF  =  1328.0002 INCHES   YMRP  =      .0000 INCHES                                          DSRMPR  =     2.020
BREF  =  1328.0002 INCHES   ZMRP  =   400.0000 INCHES
SCALE =       .0190

                                        RN/L  =   2.79   GRADIENT INTERVAL  =  -5.00/  5.00

         MACH    =    .900
                    ALPHA        DCAF        DCAB        DCN        DCLMF        CAF        CAB        CN        CLMF
                      .000      .02242      .00444     .00928     -.00632     .11569     .09544     .01737    -.04297
                  GRADIENT      .00000      .00000     .00000      .00000     .00000     .00000     .00000     .00000
```

```
                                 CALSPAN T14-053     01 T1 S1     IA36                      (SUF109)   ( 14 NOV 73  )

           REFERENCE DATA                                                                  PARAMETRIC DATA

SREF  =  2690.0004 FT.SQU   XMRP  =   953.0001 INCHES                               BETA   =      .000   DOPR   =     36.200
LREF  =  1328.0002 INCHES   YMRP  =      .0000 INCHES                               DSRMPR =     2.330
BREF  =  1328.0002 INCHES   ZMRP  =   400.0000 INCHES
SCALE =      .0190

                                 RN/L  =   2.07   GRADIENT INTERVAL  =  -5.00/  5.00

      MACH   =   1.200
                ALPHA       DCAF       DCAB       DCN        DCLMF       CAF        CAB        CN         CLMF
                  .000     .00831    -.03403     .01398    -.01099     .25228     .12272     .00590    -.01609
             GRADIENT      .00000     .00000     .00000     .00000     .00000     .00000     .00000     .00000

                                 CALSPAN T14-053     01 T1 S1     IA36                      (SUF111)   ( 14 NOV 73  )

           REFERENCE DATA                                                                  PARAMETRIC DATA

SREF  =  2690.0004 FT.SQU   XMRP  =   953.0001 INCHES                               BETA   =      .000   DOPR   =     28.310
LREF  =  1328.0002 INCHES   YMRP  =      .0000 INCHES                               DSRMPR =     2.020
BREF  =  1328.0002 INCHES   ZMRP  =   400.0000 INCHES
SCALE =      .0190

                                 RN/L  =   2.69   GRADIENT INTERVAL  =  -5.00/  5.00

      MACH   =    .900
                ALPHA       DCAF       DCAB       DCN        DCLMF       CAF        CAB        CN         CLMF
                  .000     .01791     .01397    -.00289     .00356     .11637     .09433     .01990    -.04575
             GRADIENT      .00000     .00000     .00000     .00000     .00000     .00000     .00000     .00000

                                 CALSPAN T14-053     01 T1 S1     IA36                      (SUF113)   ( 14 NOV 73  )

           REFERENCE DATA                                                                  PARAMETRIC DATA

SREF  =  2690.0004 FT.SQU   XMRP  =   953.0001 INCHES                               BETA   =      .000   DOPR   =     36.200
LREF  =  1328.0002 INCHES   YMRP  =      .0000 INCHES                               DSRMPR =     2.330
BREF  =  1328.0002 INCHES   ZMRP  =   400.0000 INCHES
SCALE =      .0190

                                 RN/L  =   2.06   GRADIENT INTERVAL  =  -5.00/  5.00

      MACH   =   1.200
                ALPHA       DCAF       DCAB       DCN        DCLMF       CAF        CAB        CN         CLMF
                  .000     .01994    -.03380     .00580    -.00266     .25228     .12272     .00580    -.01603
             GRADIENT      .00000     .00000     .00000     .00000     .00000     .00000     .00000     .00000
```

```
                                  CALSPAN T14-053     01 T1 S1     IA36                     (SUF115)   ( 14 NOV 73  )

          REFERENCE DATA                                                                     PARAMETRIC DATA

SREF  =  2690.0004 FT.SQU   XMRP  =   953.0001 INCHES                           BETA    =       .000   DOPR    =     28.310
LREF  =  1328.0002 INCHES   YMRP  =      .0000 INCHES                           DSRMPR  =      2.020
BREF  =  1328.0002 INCHES   ZMRP  =   400.0000 INCHES
SCALE =      .0190

                                 RN/L =   2.68   GRADIENT INTERVAL =  -5.00/  5.00

       MACH   =    .900
                  ALPHA       DCAF        DCAB        DCN        DCLMF        CAF        CAB         CN         CLMF
                    .000     .02393      .01698      .03144     -.02650     .11637      .09433      .01990     -.04575
                GRADIENT     .00000      .00000      .00000      .00000     .00000      .00000      .00000      .00000

                                  CALSPAN T14-053     01 T1 S1     IA36                     (PUF057)   ( 14 NOV 73  )

          REFERENCE DATA                                                                     PARAMETRIC DATA

SREF  =  2690.0004 FT.SQU   XMRP  =   953.0001 INCHES                                   =       .000   DOPR    =     36.200
LREF  =  1328.0002 INCHES   YMRP  =      .0000 INCHES                           DSRMPR  =      2.330
BREF  =  1328.0002 INCHES   ZMRP  =   400.0000 INCHES
SCALE =      .0190

                                 RN/L =   2.11   GRADIENT INTERVAL =  -5.00/  5.00

            MACH   =   1.200
                       ALPHA       DDCAFR      DDCNDR      DDCMFR      DCAFDR      DCN/DR      DCMFDR
                      -8.000     -.00119      .00033     -.00067      .00055     -.00024      .00019
                      -4.000     -.00059     -.00090      .00056      .00101      .00012      .00010
                        .000     -.00140     -.00056      .00067      .00096      .00035     -.00002
                       4.000     -.00207      .00022     -.00053      .00103      .00032      .00007
                       6.000     -.00211     -.00002     -.00011      .00102      .00019      .00011
                    GRADIENT     -.00019      .00014     -.00014      .00000      .00002     -.00000
```

```
                                           CALSPAN T14-053      01 T1 S1       IA36                               (PUF098)   ( 14 NOV 73  )

              REFERENCE DATA                                                                                       PARAMETRIC DATA

SREF  =  2690.0004 FT.SQU   XMRP  =    953.0001 INCHES                                          ALPHA  =       .000   DOPR    =     35.200
LREF  =  1328.0002 INCHES   YMRP  =       .0000 INCHES                                          DSRMPR =      2.330
BREF  =  1328.0002 INCHES   ZMRP  =    400.0000 INCHES
SCALE =        .0190

                                       RN/L  =    2.10    GRADIENT INTERVAL  =  -5.00/  5.00

                      MACH    =    1.200
                                   BETA         DDCYDR       DDCBLR       DDCYNR       DCY/DR       DCBLDR       DCYNDR
                                  -6.000        .00002       .00001     -.00007       .00114       .00057     -.00124
                                  -3.000        .00008       .00032     -.00001       .00125       .00056     -.00131
                                    .000        .00047       .00005     -.00016       .00105       .00048     -.00114
                                   3.000      -.00032     -.00005       .00029       .00007       .00031     -.00053
                                   6.000      -.00061     -.00004       .00055     -.00343     -.00050       .00329
                                GRADIENT      -.00007     -.00001       .00005     -.00020     -.00004       .00013

                                           CALSPAN T14-053      01 T1 S1       IA36                               (PUF102)   ( 14 NOV 73  )

              REFERENCE DATA                                                                                       PARAMETRIC DATA

SREF  =  2690.0004 FT.SQU   XMRP  =    953.0001 INCHES                                          BETA   =       .000   DOPR    =     28.310
LREF  =  1328.0002 INCHES   YMRP  =       .0000 INCHES                                          DSRMPR =      2.020
BREF  =  1328.0002 INCHES   ZMRP  =    400.0000 INCHES
SCALE =        .0190

                                       RN/L  =    2.79    GRADIENT INTERVAL  =  -5.00/  5.00

                      MACH    =     .900
                                   ALPHA        DDCAFR       DDCNOR       DDCMFR       DCAFOR       DCN/DR       DCMFOR
                                  -8.000      -.00134     -.00182       .00070       .00063       .00009       .00007
                                  -4.000        .00080       .00057     -.00064     -.00020     -.00003       .00021
                                    .000        .00040       .00113     -.00090     -.00007     -.00025       .00028
                                   4.000        .00150       .00044     -.00017       .00057     -.00010       .00014
                                   6.000        .00212     -.00169       .00082       .00055       .00018       .00011
                                GRADIENT        .00009     -.00002       .00006       .00010     -.00001     -.00001
```

```
                                       CALSPAN T14-053      01 T1 S1      IA36                       (PUF103)   ( 14 NOV 73  )

              REFERENCE DATA                                                                         PARAMETRIC DATA

SREF  =  2690.0004 FT.SQU   XMRP  =   953.0001 INCHES                               ALPHA  =       .000   DOPR    =     28.310
LREF  =  1328.0002 INCHES   YMRP  =      .0000 INCHES                               DSRMPR =      2.020
BREF  =  1328.0002 INCHES   ZMRP  =   400.0000 INCHES
SCALE =      .0190

                                      RN/L =   2.79   GRADIENT INTERVAL =  -5.00/  5.00

                  MACH   =     .900
                                BETA       DDCYDR      DDCBLR      DDCYNR      DCY/DR      DCBLDR      DCYNDR
                               -6.000     -.00034     -.00003      .00007      .00203      .00088     -.00212
                               -3.000     -.00007     -.00006      .00011      .00123      .00066     -.00147
                                 .000     -.00017     -.00024      .00029      .00061      .00035     -.00083
                                3.000     -.00096     -.00030      .00075     -.00035     -.00000      .00042
                                6.000     -.00129     -.00035      .00073     -.00432     -.00085      .00439
                             GRADIENT     -.00015     -.00004      .00011     -.00026     -.00011      .00031

                                       CALSPAN T14-053      02 T1 S1      IA36                       (QUF073)   ( 14 NOV 73  )

              REFERENCE DATA                                                                         PARAMETRIC DATA

SREF  =  2690.0004 FT.SQU   XMRP  =   953.0001 INCHES                               BETA   =       .000   DOPR    =     28.310
LREF  =  1328.0002 INCHES   YMRP  =      .0000 INCHES                               DSRMPR =      2.020
BREF  =  1328.0002 INCHES   ZMRP  =   400.0000 INCHES
SCALE =      .0190

                                      RN/L =   2.67   GRADIENT INTERVAL =  -5.00/  5.00

                  MACH   =     .900
                                ALPHA       DCN/A       DCMF/A      DXAC/L      CN/A        CLMF/A      XAC/L
                                 .000      .00167     -.00145      .00864      .05595     -.02105      .66793
                             GRADIENT      .00000      .00000      .00000      .00000      .00000      .00000
```

```
                          CALSPAN T14-053     02 T1 S1     IA36                         (QUF074)   ( 14 NOV 73  )

          REFERENCE DATA                                                                PARAMETRIC DATA

SREF  =  2690.0004 FT.SQU   XMRP  =   953.0001 INCHES                          ALPHA  =     .000   DOPR   =    28.310
LREF  =  1328.0002 INCHES   YMRP  =      .0000 INCHES                          DSRMPR =    2.020
BREF  =  1328.0002 INCHES   ZMRP  =   400.0000 INCHES
SCALE =      .0190

                            RN/L  =   2.69   GRADIENT INTERVAL  =  -5.00/  5.00

          MACH   =    .900
                    BETA      DCY/B     DCBL/B     DCYN/B     DYAC/L      CY/B      CBL/B      CYN/B     XYAC/L
                    .000    -.00008    -.00030     .00066     .00704   -.05330    -.00844     .02633     .73979
                GRADIENT     .00000     .00000     .00000     .00000    .00000     .00000     .00000     .00000

                          CALSPAN T14-053     02 T1 S1     IA36                         (QUF077)   ( 14 NOV 73  )

          REFERENCE DATA                                                                PARAMETRIC DATA

SREF  =  2690.0004 FT.SQU   XMRP  =   953.0001 INCHES                          BETA   =     .000   DOPR   =    36.200
LREF  =  1328.0002 INCHES   YMRP  =      .0000 INCHES                          DSRMPR =    2.330
BREF  =  1328.0002 INCHES   ZMRP  =   400.0000 INCHES
SCALE =      .0190

                            RN/L  =   2.02   GRADIENT INTERVAL  =  -5.00/  5.00

                    MACH   =   1.200
                           ALPHA      DCN/A     DCMF/A     DXAC/L      CN/A     CLMF/A      XAC/L
                            .000     .00035    -.00055     .00410    .06076    -.02441     .68345
                        GRADIENT     .00000     .00000     .00000    .00000     .00000     .00000

                          CALSPAN T14-053     02 T1 S1     IA36                         (QUF078)   ( 14 NOV 73  )

          REFERENCE DATA                                                                PARAMETRIC DATA

SREF  =  2690.0004 FT.SQU   XMRP  =   953.0001 INCHES                          ALPHA  =     .000   DOPR   =    36.200
LREF  =  1328.0002 INCHES   YMRP  =      .0000 INCHES                          DSRMPR =    2.330
BREF  =  1328.0002 INCHES   ZMRP  =   400.0000 INCHES
SCALE =      .0190

                            RN/L  =   2.05   GRADIENT INTERVAL  =  -5.00/  5.00

          MACH   =   1.200
                    BETA      DCY/B     DCBL/B     DCYN/B     DYAC/L      CY/B      CBL/B      CYN/B     XYAC/L
                    .000    -.00001     .00012    -.00027    -.00311   -.05339    -.00948     .02613     .73707
                GRADIENT     .00000     .00000     .00000     .00000    .00000     .00000     .00000     .00000
```

```
DATE 05 NOV 75          TABULATED DATA FOR CAL T14-053 (IA36)                                              PAGE   56

                                  CALSPAN T14-053      01 T1 S1      IA36                        (QUF083)   ( 14 NOV 73  )

              REFERENCE DATA                                                                   PARAMETRIC DATA

SREF  =  2690.0004 FT.SQU    XMRP  =    953.0001 INCHES                           BETA    =      .000   DOPR    =     36.200
LREF  =  1328.0002 INCHES    YMRP  =       .0000 INCHES                           DSRMPR  =     2.330
BREF  =  1328.0002 INCHES    ZMRP  =    400.0000 INCHES
SCALE =       .0190

                               RN/L  =   2.09   GRADIENT INTERVAL  =  -5.00/  5.00

                    MACH   =    1.200
                           ALPHA       DCN/A      DCMF/A     DXAC/L      CN/A       CLMF/A      XAC/L
                            .000     -.00156      .00107    -.00455     .06076     -.02441     .68345
                         GRADIENT     .00000      .00000     .00000     .00000      .00000     .00000

                                  CALSPAN T14-053      01 T1 S1   OPR = 2.65 X NOM               (QUF085)   ( 14 NOV 73  )

              REFERENCE DATA                                                                   PARAMETRIC DATA

SREF  =  2690.0004 FT.SQU    XMRP  =    953.0001 INCHES                           BETA    =      .000   DOPR    =     95.800
LREF  =  1328.0002 INCHES    YMRP  =       .0000 INCHES                           DSRMPR  =     2.330
BREF  =  1328.0002 INCHES    ZMRP  =    400.0000 INCHES
SCALE =       .0190

                               RN/L  =   2.06   GRADIENT INTERVAL  =  -5.00/  5.00

                    MACH   =    1.200
                           ALPHA       DCN/A      DCMF/A     DXAC/L      CN/A       CLMF/A      XAC/L
                            .000      .00130     -.00130     .00763     .06076     -.02441     .68345
                         GRADIENT     .00000      .00000     .00000     .00000      .00000     .00000

                                  CALSPAN T14-053      01 T1 S1   OPR = 1.84 X NOM               (QUF086)   ( 14 NOV 73  )

              REFERENCE DATA                                                                   PARAMETRIC DATA

SREF  =  2690.0004 FT.SQU    XMRP  =    953.0001 INCHES                           BETA    =      .000   DOPR    =     66.700
LREF  =  1328.0002 INCHES    YMRP  =       .0000 INCHES                           DSRMPR  =     2.330
BREF  =  1328.0002 INCHES    ZMRP  =    400.0000 INCHES
SCALE =       .0190

                               RN/L  =   2.01   GRADIENT INTERVAL  =  -5.00/  5.00

                    MACH   =    1.200
                           ALPHA       DCN/A      DCMF/A     DXAC/L      CN/A       CLMF/A      XAC/L
                            .000     -.00057      .00036    -.00135     .06076     -.02441     .68345
                         GRADIENT     .00000      .00000     .00000     .00000      .00000     .00000
```

```
                                   CALSPAN T14-053     01 T1 S1  SRMPR=1.36 X NOM                (QUF087)   ( 14 NOV 73  )

               REFERENCE DATA                                                                       PARAMETRIC DATA

SREF  =  2690.0004 FT.SQU   XMRP  =   953.0001 INCHES                            BETA   =     .000  DOPR   =    36.200
LREF  =  1328.0002 INCHES   YMRP  =      .0000 INCHES                            DSRMPR =    2.330
BREF  =  1328.0002 INCHES   ZMRP  =   400.0000 INCHES
SCALE =       .0190

                                  RN/L =   2.06   GRADIENT INTERVAL =  -5.00/  5.00

                   MACH    =    1.200
                                 ALPHA      DCN/A      DCMF/A     DXAC/L      CN/A      CLMF/A      XAC/L
                                  .000    -.00276     .00130    -.00205     .06076    -.02441     .68345
                              GRADIENT     .00000     .00000     .00000     .00000     .00000     .00000

                                   CALSPAN T14-053     01 T1 S1      IA35                        (QUF090)   ( 14 NOV 73  )

               REFERENCE DATA                                                                       PARAMETRIC DATA

SREF  =  2690.0004 FT.SQU   XMRP  =   953.0001 INCHES                            BETA   =     .000  DOPR   =    29.310
LREF  =  1328.0002 INCHES   YMRP  =      .0000 INCHES                            DSRMPR =    2.020
BREF  =  1328.0002 INCHES   ZMRP  =   400.0000 INCHES
SCALE =       .0190

                                  RN/L =   2.69   GRADIENT INTERVAL =  -5.00/  5.00

                   MACH    =     .900
                                 ALPHA      DCN/A      DCMF/A     DXAC/L      CN/A      CLMF/A      XAC/L
                                  .000     .00075    -.00085     .00608     .05595    -.02105     .66793
                              GRADIENT     .00000     .00000     .00000     .00000     .00000     .00000

                                   CALSPAN T14-053     01 T1 S1  OPR = 2.5 X NOM                 (QUF092)   ( 14 NOV 73  )

               REFERENCE DATA                                                                       PARAMETRIC DATA

SREF  =  2630.0004 FT.SQU   XMRP  =   953.0001 INCHES                            BETA   =     .000  DOPR   =    70.500
LREF  =  1328.0002 INCHES   YMRP  =      .0000 INCHES                            DSRMPR =    2.020
BREF  =  1328.0002 INCHES   ZMRP  =   400.0000 INCHES
SCALE =       .0190

                                  RN/L =   2.70   GRADIENT INTERVAL =  -5.00/  5.00

                   MACH    =     .900
                                 ALPHA      DCN/A      DCMF/A     DXAC/L      CN/A      CLMF/A      XAC/L
                                  .000     .00026    -.00027     .00184     .05595    -.02105     .66793
                              GRADIENT     .00000     .00000     .00000     .00000     .00000     .00000
```

```
                                   CALSPAN T14-053     01 T1 S1  OPR = 1.72 X NOM                 (QUF093)   ( 14 NOV 73  )

          REFERENCE DATA                                                                        PARAMETRIC DATA

SREF  =  2690.0004 FT.SQU   XMRP  =   953.0001 INCHES                            BETA   =      .000  DOPR    =     48.600
LREF  =  1328.0002 INCHES   YMRP  =      .0000 INCHES                            DSRMPR =     2.020
BREF  =  1328.0002 INCHES   ZMRP  =   400.0000 INCHES
SCALE =       .0190

                                 RN/L  =   2.70   GRADIENT INTERVAL =  -5.00/  5.00

                   MACH   =    .900
                              ALPHA      DCN/A      DCMF/A     DXAC/L      CN/A      CLMF/A      XAC/L
                               .000     .00109    -.00122     .00873    .05595    -.02105     .66793
                           GRADIENT     .00000     .00000     .00000    .00000     .00000     .00000

                                   CALSPAN T14-053     01 T1 S1  SRMPA = 1.2 X NOM                (QUF094)   ( 14 NOV 73  )

          REFERENCE DATA                                                                        PARAMETRIC DATA

SREF  =  2690.0004 FT.SQU   XMRP  =   953.0001 INCHES                            BETA   =      .000  DOPR    =     28.310
LREF  =  1328.0002 INCHES   YMRP  =      .0000 INCHES                            DSRMPR =     2.400
BREF  =  1328.0002 INCHES   ZMRP  =   400.0000 INCHES
SCALE =       .0190

                                 RN/L  =   2.68   GRADIENT INTERVAL =  -5.00/  5.00

                   MACH   =    .900
                              ALPHA      DCN/A      DCMF/A     DXAC/L      CN/A      CLMF/A      XAC/L
                               .000     .00044    -.00097     .00867    .05595    -.02105     .66793
                           GRADIENT     .00000     .00000     .00000    .00000     .00000     .00000

                                   CALSPAN T14-053     01 T1 S1      IA36                         (QUF097)   ( 14 NOV 73  )

          REFERENCE DATA                                                                        PARAMETRIC DATA

SREF  =  2690.0004 FT.SQU   XMRP  =   953.0001 INCHES                            BETA   =      .000  DOPR    =     36.200
LREF  =  1328.0002 INCHES   YMRP  =      .0000 INCHES                            DSRMPR =     2.330
BREF  =  1328.0002 INCHES   ZMRP  =   400.0000 INCHES
SCALE =       .0190

                                 RN/L  =   2.11   GRADIENT INTERVAL =  -5.00/  5.00

                   MACH   =   1.200
                              ALPHA      DCN/A      DCMF/A     DXAC/L      CN/A      CLMF/A      XAC/L
                               .000    -.00021    -.00026     .00340    .06100    -.02443     .68274
                           GRADIENT     .00000     .00000     .00000    .00000     .00000     .00000
```

REPRODUCIBILITY OF TH
ORIGINAL PAGE IS P

```
                                       CALSPAN T14-053     01 T1 S1     IA36                        (QUF098)   ( 14 NOV 73  )

        REFERENCE DATA                                                                              PARAMETRIC DATA

SREF  =  2690.0004 FT.SQU   XMRP  =   953.0001 INCHES                                  ALPHA  =      .000   DOPR    =    36.200
LREF  =  1328.0002 INCHES   YMRP  =      .0000 INCHES                                  DSRMPR =     2.330
BREF  =  1328.0002 INCHES   ZMRP  =   400.0000 INCHES
SCALE =      .0190

                                      RN/L  =   2.10   GRADIENT INTERVAL  =  -3.00/  5.00

       MACH    =    1.200
                    BETA      DCY/B      DCBL/B     DCYN/B     DYAC/L      CY/B      CBL/B      CYN/B      XYAC/L
                     .000    -.00052    -.00008     .00021    -.00046    -.05449    -.00967     .02667     .73702
                 GRADIENT     .00000     .00000     .00000     .00000     .00000     .00000     .00000     .00000

                                       CALSPAN T14-053     01 T1 S1     IA36                        (QUF102)   ( 14 NOV 73  )

        REFERENCE DATA                                                                              PARAMETRIC DATA

SREF  =  2690.0004 FT.SQU   XMRP  =   953.0001 INCHES                                  BETA   =      .000   DOPR    =    28.310
LREF  =  1328.0002 INCHES   YMRP  =      .0000 INCHES                                  DSRMPR =     2.020
BREF  =  1328.0002 INCHES   ZMRP  =   400.0000 INCHES
SCALE =      .0190

                                      RN/L  =   2.73   GRADIENT INTERVAL  =  -5.00/  5.00

              MACH    =     .900
                           ALPHA      DCN/A      DCMF/A     DXAC/L      CN/A      CLMF/A      XAC/L
                            .000     .00032    -.00006    -.00065     .05597    -.02124     .66984
                        GRADIENT     .00000     .00000     .00000     .00000     .00000     .00000

                                       CALSPAN T14-053     01 T1 S1     IA36                        (QUF103)   ( 14 NOV 73  )

        REFERENCE DATA                                                                              PARAMETRIC DATA

SREF  =  2690.0004 FT.SQU   XMRP  =   953.0001 INCHES                                  ALPHA  =      .000   DOPR    =    28.310
LREF  =  1328.0002 INCHES   YMRP  =      .0000 INCHES                                  DSRMPR =     2.020
BREF  =  1328.0002 INCHES   ZMRP  =   400.0000 INCHES
SCALE =      .0190

                                      RN/L  =   2.79   GRADIENT INTERVAL  =  -5.00/  5.00

       MACH    =     .900
                    BETA      DCY/B      DCBL/B     DCYN/B     DYAC/L      CY/B      CBL/B      CYN/B      XYAC/L
                     .000    -.00187    -.00038     .00151     .00618    -.05411    -.00908     .02721     .74521
                 GRADIENT     .00000     .00000     .00000     .00000     .00000     .00000     .00000     .00000
```

```
                                  CALSPAN T14-053      01 T1 S1      IA36                        (QUF105)   ( 14 NOV 73  )

               REFERENCE DATA                                                                        PARAMETRIC DATA

SREF  =  2690.0004 FT.SQU    XMRP  =    953.0001 INCHES                                  ALPHA  =      .000   DOPR    =      36.200
LREF  =  1328.0002 INCHES    YMRP  =       .0000 INCHES                                  DSRMPR =     2.330
BREF  =  1328.0002 INCHES    ZMRP  =    400.0000 INCHES
SCALE =       .0190

                                 RN/L  =    2.12    GRADIENT INTERVAL  =  -5.00/  5.00

         MACH    =    1.200
                       BETA        DCY/B      DCBL/B      DCYN/B      DYAC/L       CY/B       CBL/B       CYN/B       XYAC/L
                        .000     -.00119     -.00021      .00039     -.00217     -.05338     -.00948      .02613      .73707
                    GRADIENT      .00000      .00000      .00000      .00000      .00000      .00000      .00000      .00000

                                  CALSPAN T14-053      01 T1 S1      IA36                        (QUF108)   ( 14 NOV 73  )

               REFERENCE DATA                                                                        PARAMETRIC DATA

SREF  =  2690.0004 FT.SQU    XMRP  =    953.0001 INCHES                                  ALPHA  =      .000   DOPR    =      28.310
LREF  =  1328.0002 INCHES    YMRP  =       .0000 INCHES                                  DSRMPR =     2.020
BREF  =  1328.0002 INCHES    ZMRP  =    400.0000 INCHES
SCALE =       .0190

                                 RN/L  =    2.77    GRADIENT INTERVAL  =  -5.00/  5.00

         MACH    =     .900
                       BETA        DCY/B      DCBL/B      DCYN/B      DYAC/L       CY/B       CBL/B       CYN/B       XYAC/L
                        .000     -.00173     -.00036      .00087      .00021     -.05330     -.00844      .02633      .73979
                    GRADIENT      .00000      .00000      .00000      .00000      .00000      .00000      .00000      .00000

                                  CALSPAN T14-053      01 T1 S1      IA36                        (QUF109)   ( 14 NOV 73  )

               REFERENCE DATA                                                                        PARAMETRIC DATA

SREF  =  2690.0004 FT.SQU    XMRP  =    953.0001 INCHES                                  BETA   =      .000   DOPR    =      36.200
LREF  =  1328.0002 INCHES    YMRP  =       .0000 INCHES                                  DSRMPR =     2.330
BREF  =  1328.0002 INCHES    ZMRP  =    400.0000 INCHES
SCALE =       .0190

                                 RN/L  =    2.07    GRADIENT INTERVAL  =  -5.00/  5.00

                MACH    =    1.200
                              ALPHA        DCN/A      DCMF/A      DXAC/L        CN/A      CLMF/A       XAC/L
                               .000     -.00372      .00254     -.01115      .06076     -.02441      .68345
                           GRADIENT      .00000      .00000      .00000      .00000      .00000      .00000
```

```
                                 CALSPAN T14-053      01 T1 S1      IA36                    (QUF110)    ( 14 NOV 73  )

              REFERENCE DATA                                                                       PARAMETRIC DATA

SREF  =  2690.0004 FT.SQU   XMRP  =    953.0001 INCHES                               ALPHA  =      .000   DOPR   =     36.200
LREF  =  1328.0002 INCHES   YMRP  =       .0000 INCHES                               DSRMPR =     2.330
BREF  =  1328.0002 INCHES   ZMRP  =    400.0000 INCHES
SCALE =       .0190

                                 RN/L  =     .16   GRADIENT INTERVAL  =  -5.00/  5.00

          MACH   =    1.200
                       BETA      DCY/B      DCBL/B     DCYN/B     DYAC/L     CY/B       CBL/B      CYN/B      XYAC/L
                        .000     .00033     .00020    -.00065    -.00564    -.05338    -.00948     .02613     .73707
                    GRADIENT     .00000     .00000     .00000     .00000     .00000     .00000     .00000     .00000

                                 CALSPAN T14-053      01 T1 S1      IA36                    (QUF111)    ( 14 NOV 73  )

              REFERENCE DATA                                                                       PARAMETRIC DATA

SREF  =  2690.0004 FT.SQU   XMRP  =    953.0001 INCHES                               BETA   =      .000   DOPR   =     28.310
LREF  =  1328.0002 INCHES   YMRP  =       .0000 INCHES                               DSRMPR =     2.020
BREF  =  1328.0002 INCHES   ZMRP  =    400.0000 INCHES
SCALE =       .0190

                                 RN/L  =    2.69   GRADIENT INTERVAL  =  -5.00/  5.00

                    MACH   =     .900
                                ALPHA      DCN/A      DCMF/A     DXAC/L     CN/A       CLMF/A     XAC/L
                                 .000    -.00026     .00001     .00103     .05595    -.02105     .66793
                             GRADIENT     .00000     .00000     .00000     .00000     .00000     .00000

                                 CALSPAN T14-053      01 T1 S1      IA36                    (QUF112)    ( 14 NOV 73  )

              REFERENCE DATA                                                                       PARAMETRIC DATA

SREF  =  2690.0004 FT.SQU   XMRP  =    953.0001 INCHES                               ALPHA  =      .000   DOPR   =     28.310
LREF  =  1328.0002 INCHES   YMRP  =       .0000 INCHES                               DSRMPR =     2.020
BREF  =  1328.0002 INCHES   ZMRP  =    400.0000 INCHES
SCALE =       .0190

                                 RN/L  =    2.65   GRADIENT INTERVAL  =  -5.00/  5.00

          MACH   =     .900
                       BETA      DCY/B      DCBL/B     DCYN/B     DYAC/L     CY/B       CBL/B      CYN/B      XYAC/L
                        .000    -.00197    -.00039     .00144     .00520    -.05330    -.00844     .02633     .73979
                    GRADIENT     .00000     .00000     .00000     .00000     .00000     .00000     .00000     .00000
```

```
                                        CALSPAN T14-053     01 T1 S1     IA36                           (QUF113)   ( 14 NOV 73  )

          REFERENCE DATA                                                                                  PARAMETRIC DATA

SREF  =  2690.0004 FT.SQU   XMRP  =   953.0001 INCHES                                    BETA   =       .000   DOPR    =     36.200
LREF  =  1328.0002 INCHES   YMRP  =      .0000 INCHES                                    DSRMPR =      2.330
BREF  =  1328.0002 INCHES   ZMRP  =   400.0000 INCHES
SCALE =      .0190

                                       RN/L  =   2.06   GRADIENT INTERVAL =  -5.00/  5.00

                  MACH    =    1.200
                                ALPHA       DCN/A      DCMF/A      DXAC/L      CN/A       CLMF/A      XAC/L
                                 .000     -.00026     -.00059      .00702     .06076     -.02441     .68345
                             GRADIENT      .00000      .00000      .00000     .00000      .00000     .00000

                                        CALSPAN T14-053     01 T1 S1     IA36                           (QUF114)   ( 14 NOV 73  )

          REFERENCE DATA                                                                                  PARAMETRIC DATA

SREF  =  2690.0004 FT.SQU   XMRP  =   953.0001 INCHES                                    ALPHA  =       .000   DOPR    =     28.310
LREF  =  1328.0002 INCHES   YMRP  =      .0000 INCHES                                    DSRMPR =      2.020
BREF  =  1328.0002 INCHES   ZMRP  =   400.0000 INCHES
SCALE =      .0190

                                       RN/L  =   2.05   GRADIENT INTERVAL =  -5.00/  5.00

           MACH    =    1.200
                         BETA       DCY/B      DCBL/B      DCYN/B      DYAC/L      CY/B       CBL/B       CYN/B      XYAC/L
                         .000     -.00017     -.00020      .00026      .00197    -.05338     -.00948      .02613      .73707
                     GRADIENT      .00000      .00000      .00000      .00000     .00000      .00000      .00000      .00000

                                        CALSPAN T14-053     01 T1 S1     IA36                           (QUF115)   ( 14 NOV 73  )

          REFERENCE DATA                                                                                  PARAMETRIC DATA

SREF  =  2690.0004 FT.SQU   XMRP  =   953.0001 INCHES                                    BETA   =       .000   DOPR    =     28.310
LREF  =  1328.0002 INCHES   YMRP  =      .0000 INCHES                                    DSRMPR =      2.020
BREF  =  1328.0002 INCHES   ZMRP  =   400.0000 INCHES
SCALF =      .0190

                                       RN/L  =   2.68   GRADIENT INTERVAL =  -5.00/  5.00

                  MACH    =     .900
                                ALPHA       DCN/A      DCMF/A      DXAC/L      CN/A       CLMF/A      XAC/L
                                 .000      .00074     -.00088      .00646     .05595     -.02105     .66793
                             GRADIENT      .00000      .00000      .00000     .00000      .00000     .00000
```

```
                                   CALSPAN T14-053     01 T1 S1     IA36                         (QUF116)   ( 14 NOV 73  )

          REFERENCE DATA                                                                      PARAMETRIC DATA

SREF  =  2690.0004 FT.SQU   XMRP  =   953.0001 INCHES                           ALPHA  =      .000  DOPR    =      28.310
LREF  =  1328.0002 INCHES   YMRP  =      .0000 INCHES                           DSRMPR =     2.020
BREF  =  1328.0002 INCHES   ZMRP  =   400.0000 INCHES
SCALE =      .0190

                                  RN/L  =   2.69   GRADIENT INTERVAL =  -5.00/  5.00

       MACH   =     .900
                    BETA       DCY/B       DCBL/B      DCYN/B      DYAC/L      CY/B        CBL/B       CYN/B       XYAC/L
                     .000     -.00173     -.00046      .00138      .00584    -.05330     -.00844      .02633      .73979
                 GRADIENT      .00000      .00000      .00000      .00000     .00000      .00000      .00000      .00000

                                   CALSPAN T14-053     02 T1 S1     IA36                         (AUF015)   ( 26 SEP 73  )

          REFERENCE DATA                                                                      PARAMETRIC DATA

SREF  =  2690.0004 FT.SQU   XMRP  =   953.0001 INCHES                           BETA   =      .000  MPSRA   =        .000
LREF  =  1328.0002 INCHES   YMRP  =      .0000 INCHES                           POWER  =      .000  RUDDER  =        .000
BREF  =  1328.0002 INCHES   ZMRP  =   400.0000 INCHES
SCALE =      .0190

                         RUN NO.   15/ 0    RN/L =   2.82   GRADIENT INTERVAL =  -5.00/  5.00

   MACH       ALPHA      CNW        CHW        CBW        CHR        CHEI       CHEO       CN         CLMF       CLM        CAF
   .905      -7.760    -.13900     .01160    -.05940     .02440     .05030     .03360    -.45510     .14780     .15130     .18733
   .903      -3.790     .00850     .00210     .00980     .02590     .04430     .03220    -.21330     .04830     .05220     .12056
   .901       -.010     .13540    -.01010     .07180     .02420     .03940     .02170     .01360    -.04060    -.03690     .11035
   .901       3.700     .24920    -.02850     .12150     .02200     .04460     .02770     .21690    -.11010    -.10690     .10893
   .901       7.670     .33070    -.04400     .14950     .01830     .03960     .02260     .40740    -.17070    -.16760     .10422
           GRADIENT     .03214    -.00408     .01492    -.00052     .00004    -.00061     .05744    -.02116    -.02125    -.00156
```

```
                               CALSPAN T14-053     02 T1 S1      IA36                           (AUF018)   ( 26 SEP 73

              REFERENCE DATA                                                                         PARAMETRIC DATA

SREF  =  2690.0004 FT.SQU   XMRP  =   953.0001 INCHES                               BETA   =      .000   MPSRA  =      .000
LREF  =  1328.0002 INCHES   YMRP  =      .0000 INCHES                               POWER  =      .000   RUDDER =      .000
BREF  =  1328.0002 INCHES   ZMRP  =   400.0000 INCHES
SCALE =      .0190

                        RUN NO.   18/ 0    RN/L =   2.99    GRADIENT INTERVAL =  -5.00/  5.00

  MACH      ALPHA       CNW        CHW        CBW        CHR        CHEI       CHEO        CN         CLMF       CLM        CAF
  1.200     -8.100    -.19050    -.00240    -.08270     .04490     .11680     .05780    -.53610     .20310     .20960     .23258
  1.001     -6.120    -.11360    -.00400    -.04480     .03590     .10850     .04100    -.40070     .15070     .15170     .23954
  1.201     -4.090    -.02020    -.00590     .00020     .03840     .09950     .04210    -.26060     .09610     .10200     .24242
          GRADIENT     .00000     .00000     .00000     .00000     .00000     .00000     .00000     .00000     .00000     .00000

                               CALSPAN T14-053     02 T1 S1      IA36                           (AUF019)   ( 26 SEP 73   )

              REFERENCE DATA                                                                         PARAMETRIC DATA

SREF  =  2690.0004 FT.SQU   XMRP  =   953.0001 INCHES                               BETA   =      .000   MPSRA  =      .000
LREF  =  1328.0002 INCHES   YMRP  =      .0000 INCHES                               POWER  =      .000   RUDDER =      .000
BREF  =  1328.0002 INCHES   ZMRP  =   400.0000 INCHES
SCALE =      .0190

                        RUN NO.   19/ 0    RN/L =   2.76    GRADIENT INTERVAL =  -5.00/  5.00

  MACH      ALPHA       CNW        CHW        CBW        CHR        CHEI       CHEO        CN         CLMF       CLM        CAF
   .903     -8.100    -.15340     .01310    -.06680     .02980     .05310     .04000    -.48880     .15960     .16330     .10779
   .901     -6.090    -.07660     .00830    -.03110     .03200     .04960     .04080    -.35780     .10990     .11310     .11125
   .900     -4.090    -.00500     .00330     .00390     .03180     .04570     .03810    -.23360     .05880     .06230     .10139
   .901       .010     .12910    -.01050     .06810     .02990     .04140     .02870     .00100    -.03380    -.03090     .10603
   .903      2.010     .19210    -.01960     .09950     .02890     .04320     .03030     .11790    -.07880    -.07610     .11063
   .903      4.030     .25310    -.02930     .12610     .02790     .04450     .03340     .22760    -.11550    -.11330     .10594
   .905      6.020     .27700    -.03890     .12960     .02720     .04270     .03310     .31090    -.13410    -.13190     .10387
   .900      7.990     .33150    -.04410     .15380     .02550     .03890     .02830     .41510    -.17240    -.17030     .10120
          GRADIENT     .03187    -.00398     .01518    -.00048    -.00017    -.00067     .05699    -.02169    -.02184     .00075
```

```
                                         CALSPAN T14-053     02 TI SI     IA36                     (AUF020)   ( 26 SEP 73  )

          REFERENCE DATA                                                                                PARAMETRIC DATA

SREF  =  2690.0004 FT.SQU   XMRP  =   953.0001 INCHES                                   ALPHA  =      .000  MPSRA  =      .000
LREF  =  1328.0002 INCHES   YMRP  =      .0000 INCHES                                   POWER  =      .000  RUDDER =      .000
BREF  =  1328.0002 INCHES   ZMRP  =   400.0000 INCHES
SCALE =       .0190

                               RUN NO.   20/ 0    RN/L =   2.81    GRADIENT INTERVAL =  -5.00/  5.00

  MACH       BETA        CNW         CHW         CBW         CHR         CHEI        CHEO        CN          CLMF        CLM         CAF
  .903      -6.080      .22030     -.03830      .10160     -.00180      .06500      .01990      .00180     -.03870     -.03600      .11425
  .900      -3.060      .20100     -.02920      .09500      .01270      .05910      .02110      .00630     -.04040     -.03760      .10080
  .902      -2.030      .18450     -.01980      .08720      .02570      .05370      .02820      .00480     -.03830     -.03570      .10992
  .898        .000      .13980     -.00990      .06890      .02850      .04170      .02580      .00120     -.03420     -.03110      .11243
  .899       3.070      .08500      .00770      .05020      .02240      .02380      .01110     -.00250     -.03530     -.03170      .10914
  .898       6.090      .05270      .01800      .03800      .04450      .01430      .01150     -.01630     -.02840     -.02410      .09803
          GRADIENT     -.01921      .00582     -.00738      .00104     -.00579     -.00202     -.00145      .00083      .00098      .00100

                                         CALSPAN T14-053     02 TI SI     IA36                     (AUF022)   ( 26 SEP 73  )

          REFERENCE DATA                                                                                PARAMETRIC DATA

SREF  =  2690.0004 FT.SQU   XMRP  =   953.0001 INCHES                                   BETA   =      .000  MPSRA  =      .000
LREF  =  1328.0002 INCHES   YMRP  =      .0000 INCHES                                   POWER  =      .000  RUDDER =      .000
BREF  =  1328.0002 INCHES   ZMRP  =   400.0000 INCHES
SCALE =       .0190

                               RUN NO.   22/ 0    RN/L =   2.17    GRADIENT INTERVAL =  -5.00/  5.00

  MACH       ALPHA       CNW         CHW         CBW         CHR         CHEI        CHEO        CN          CLMF        CLM         CAF
 1.178      -8.130     -.19010     -.00270     -.08390      .02900      .11840      .05310     -.54840      .20770      .21280      .33084
 1.179      -6.020     -.09640     -.00410     -.03970      .02970      .10850      .04930     -.39460      .14670      .15290      .27825
 1.177      -4.060     -.01240     -.00600      .00380      .03080      .09950      .04690     -.25690      .09260      .09920      .25673
 1.176      -2.030      .06760     -.00830      .04600      .03040      .09150      .04020     -.12150      .03500      .04160      .26731
 1.172       -.010      .14150     -.01080      .08530      .03030      .08530      .02840      .00520     -.01740     -.01090      .27281
 1.172       2.050      .21940     -.01310      .12350      .03020      .07900      .01420      .13390     -.06620     -.05980      .28185
 1.175       4.050      .26700     -.01210      .15090      .02950      .05880      .00000      .25800     -.11440     -.10740      .25975
 1.176       6.020      .33590     -.01500      .18280      .02550      .06100     -.01210      .37480     -.15950     -.15240      .25912
          GRADIENT      .03501     -.00084      .01831     -.00014     -.00365     -.00590      .06331     -.02538     -.02535      .00102
```

```
                                CALSPAN T14-053     02 T1 S1     IA36                       (AUF023)   ( 26 SEP 73  )
              REFERENCE DATA
                                                                                        PARAMETRIC DATA
SREF  =  2690.0004 FT.SQU   XMRP  =   953.0001 INCHES
LREF  =  1328.0002 INCHES   YMRP  =      .0000 INCHES                          ALPHA  =      .000   MPSRA  =      .000
BREF  =  1328.0002 INCHES   ZMRP  =   400.0000 INCHES                          POWER  =      .000   RUDDER =      .000
SCALE =      .0190

                        RUN NO.   23/ 0    RN/L =   2.15    GRADIENT INTERVAL =  -5.00/  5.00

  MACH      BETA       CNW        CHW        CBW        CHR        CHEI       CHEO       CN         CLMF       CLM        CAF
  1.195    -6.080     .26540    -.02110     .13660    -.00610     .10180     .00510    -.00990    -.01590    -.00910     .24852
  1.176    -3.060     .22740    -.01720     .11970    -.00260     .09610     .01280    -.00820    -.01470    -.00790     .24749
  1.172    -2.030     .19040    -.01300     .10340     .00810     .08930     .02000     .00120    -.01790    -.01100     .25245
  1.178      .000     .14480    -.01120     .08440     .02450     .08510     .02620     .00770    -.01830    -.01160     .26519
  1.172     2.030     .06370    -.00530     .05080     .03930     .06840     .03070    -.00360    -.01390    -.00700     .24645
  1.175     3.060     .00010    -.00470     .02670     .05740     .04970     .03780    -.01040    -.01210    -.00520     .24766
  1.178     6.080    -.04300    -.00120     .00800     .07720     .03750     .04300    -.01610    -.01140    -.00460     .25224
          GRADIENT   -.03533     .00195    -.01451     .00916    -.00684     .00364    -.00061     .00060     .00061    -.00043

                                CALSPAN T14-053     02 T1 S1     IA36                       (AUF024)   ( 26 SEP 73  )
              REFERENCE DATA
                                                                                        PARAMETRIC DATA
SREF  =  2690.0004 FT.SQU   XMRP  =   953.0001 INCHES                          BETA   =      .000   MPSRA  =      .000
LREF  =  1328.0002 INCHES   YMRP  =      .0000 INCHES                          POWER  =     1.000   OPR    =    36.200
BREF  =  1328.0002 INCHES   ZMRP  =   400.0000 INCHES                          SRMPR  =     2.330   RUDDER =      .000
SCALE =      .0190

                        RUN NO.   24/ 0    RN/L =   2.16    GRADIENT INTERVAL =  -5.00/  5.00

  MACH      ALPHA      CNW        CHW        CBW        CHR        CHEI       CHEO       CN         CLMF       CLM        CAF
  1.137    -8.150    -.19430    -.00140    -.08440     .01800     .11250     .05590    -.53390     .19620     .20210     .23704
  1.312    -6.050    -.11970    -.00330    -.04330     .02260     .10500     .05390    -.38290     .13860     .14460     .23370
  1.191    -4.100    -.00940    -.00480    -.00100     .01590     .08870     .03920    -.24510     .08300     .08890     .25359
  1.199    -2.040     .07400    -.00750     .04470     [illegible]     .07810     .02920    -.10650     .02330     .02890     .25056
  1.193     -.040     .15120    -.00980     .08530     .01390     .07460     .01900     .01190    -.02460    -.01860     .24730
  1.196     1.950     .22200    -.01250     .12380     .01000     .06810     .00160     .14400    -.07610    -.07050     .25869
          GRADIENT    .03829    -.00126     .02060    -.00085    -.00325    -.00610     .06381    -.02607    -.02610     .00057
```

```
                              CALSPAN T14-053     02 T1 S1     IA36                        (AUF025)   ( 26 SEP 73  )

              REFERENCE DATA                                                                        PARAMETRIC DATA

SREF  =  2690.0004 FT.SQU   XMRP  =   953.0001 INCHES                          ALPHA  =      .000  MPSRA  =        .000
LREF  =  1328.0002 INCHES   YMRP  =      .0000 INCHES                          POWER  =     1.000  OPR    =      36.200
BREF  =  1328.0002 INCHES   ZMRP  =   400.0000 INCHES                          SRMPR  =     2.330  RUDDER =        .000
SCALE =      .0190

                         RUN NO.   25/ 0    RN/L =   2.13    GRADIENT INTERVAL =  -5.00/  5.00

  MACH      BETA      CNW       CHW       CBW       CHR       CHEI      CHEO      CN        CLMF      CLM       CAF
  1.183    -6.080    .27370   -.02120    .13710    .00590    .09770    .00530    .00040   -.02610   -.01940    .22869
  1.197      .000    .15390   -.00970    .08660    .02060    .07800    .02890    .01540   -.02560   -.02000    .24681
  1.195     3.050    .03060   -.00420    .03910    .02310    .04790    .03130    .00350   -.02220   -.01660    .23535
  1.170     6.080   -.03020    .00090    .00930    .05700    .02480    .03900   -.00910   -.01690   -.01120    .22601
         GRADIENT   -.04043    .00180   -.01557    .00082   -.00987    .00079   -.00390    .00111    .00111   -.00343

                              CALSPAN T14-053     02 T1 S1     IA36                        (AUF026)   ( 26 SEP 73  )

              REFERENCE DATA                                                                        PARAMETRIC DATA

SREF  =  2690.0004 FT.SQU   XMRP  =   953.0001 INCHES                          BETA   =      .000  MPSRA  =        .000
LREF  =  1328.0002 INCHES   YMRP  =      .0000 INCHES                          POWER  =      .000  RUDDER =        .000
BREF  =  1328.0002 INCHES   ZMRP  =   400.0000 INCHES
SCALE =      .0190

                         RUN NO.   26/ 0    RN/L =   4.89    GRADIENT INTERVAL =  -5.00/  5.00

  MACH      ALPHA     CNW       CHW       CBW       CHR       CHEI      CHEO      CN        CLMF      CLM       CAF
  1.279    -8.080   -.13930    .01310   -.06480    .01660    .05670    .03500   -.48960    .15880    .16380    .10138
  1.278    -4.010    .00620    .00400    .00750    .01650    .04530    .02980   -.22470    .05330    .05760    .11324
  1.280     -.020    .14110   -.00770    .07500    .01550    .03810    .01940    .01670   -.04570   -.04110    .11133
  1.281     3.980    .25670   -.03030    .12700    .01390    .04760    .03090    .23990   -.12190   -.11770    .10791
  1.281     6.020    .29810   -.04030    .14100    .01360    .04770    .02560    .34090   -.15000   -.14550    .10084
         GRADIENT    .03135   -.00429    .01496   -.00033    .00029    .00014    .05815   -.02193   -.02194   -.00067
```

```
DATE 05 NOV 75          TABULATED DATA FOR CAL T14-053 (IA36)
                                                                                              PAGE   69
                                   CALSPAN T14-053     02 T1 S1      IA36
                                                                                   (AUF027)   ( 26 SEP 73  )
              REFERENCE DATA
                                                                                      PARAMETRIC DATA
SREF  =  2690.0004 FT.SQU   XMRP  =   953.0001 INCHES
LREF  =  1328.0002 INCHES   YMRP  =      .0000 INCHES                      ALPHA  =     .000   MPSRA  =     .000
BREF  =  1328.0002 INCHES   ZMRP  =   400.0000 INCHES                      POWER  =     .000   RUDDER =     .000
SCALE =      .0190

                         RUN NO.   27/ 0    RN/L =   4.90    GRADIENT INTERVAL =  -5.00/  5.00

  MACH     BETA       CNW       CHW       CBW       CHR       CHEI      CHEO      CN        CLMF      CLM       CAF
  1.278   -6.080    .23260   -.03830    .10390    .00260    .07040    .03300    .00010   -.03830   -.03380    .10439
  1.285   -3.050    .21150   -.02380    .09770    .01790    .05930    .02680    .01350   -.04460   -.04050    .10913
  1.279     .000    .15900   -.00750    .07940    .01660    .03760    .02060    .02020   -.04670   -.04230    .11399
  1.284    3.050    .10610    .00590    .06000    .01400    .02070    .01650    .01600   -.04660   -.04190    .11275
  1.281    6.090    .05530    .02020    .04120    .04510    .00920    .01520   -.00590   -.03330   -.02800    .10423
         GRADIENT  -.01728    .00487   -.00618   -.00064   -.00633   -.00169    .00041   -.00033   -.00023    .00050

                                   CALSPAN T14-053     02 T1 S1      IA36
                                                                                   (AUF028)   ( 26 SEP 73  )
              REFERENCE DATA
                                                                                      PARAMETRIC DATA
SREF  =  2690.0004 FT.SQU   XMRP  =   953.0001 INCHES
LREF  =  1328.0002 INCHES   YMRP  =      .0000 INCHES                      BETA   =     .000   MPSRA  =     .000
BREF  =  1328.0002 INCHES   ZMRP  =   400.0000 INCHES                      POWER  =    1.000   OPR    =   28.310
SCALE =      .0190                                                         SRMPR  =    2.020   RUDDER =     .000

                         RUN NO.   28/ 0    RN/L =   4.72    GRADIENT INTERVAL =  -5.00/  5.00

  MACH     ALPHA      CNW       CHW       CBW       CHR       CHEI      CHEO      CN        CLMF      CLM       CAF
  1.286   -8.110   -.14320    .01330   -.06970    .01660    .05850    .03740   -.48600    .16060    .16680    .12224
  1.289   -4.070    .00900    .00430    .00680    .01630    .04620    .02850   -.22520    .05690    .06280    .13834
  1.276    -.020    .15190   -.00870    .07730    .01370    .04000    .01680    .02370   -.04700   -.04150    .14103
  1.296    4.000    .26340   -.02940    .12670    .01270    .04560    .02990    .24550   -.12460   -.11940    .12787
  1.278    5.980    .30800   -.04100    .14430    .01380    .04840    .02120    .34680   -.15250   -.14660    .12746
         GRADIENT   .03153   -.00417    .01486   -.00045   -.00008    .00017    .05833   -.02249   -.02258   -.00129
```

```
DATE 05 NOV 75              TABULATED DATA FOR CAL T14-053 (IA36)                                              PAGE   69

                                        CALSPAN T14-053      02 TI SI      IA36                      (AUF029)   ( 26 SEP 73  )

            REFERENCE DATA                                                                          PARAMETRIC DATA

SREF  =  2690.0004 FT.SQU   XMRP  =   953.0001 INCHES                               ALPHA  =      .000   MPSRA  =        .000
LREF  =  1328.0002 INCHES   YMRP  =      .0000 INCHES                               POWER  =     1.000   OPR    =      28.310
BREF  =  1328.0002 INCHES   ZMRP  =   400.0000 INCHES                               SRMPR  =     2.020   RUDDER =        .000
SCALE =       .0190

                        RUN NO.   29/ 0    RN/L =    4.15    GRADIENT INTERVAL =  -5.00/  5.00

  MACH       BETA        CNW        CHW        CBW        CHR        CHEI       CHEO        CN         CLMF        CLM         CAF
  1.300     -6.080      .22400    -.04070     .10240     .00070     .07270     .02640     .00090    -.03530    -.02950     .11950
  1.272     -3.050      .20750    -.02500     .09640     .01550     .06210     .02070     .01550    -.04390    -.03850     .12910
  1.286       .000      .15910    -.00830     .07950     .01240     .03930     .01480     .02040    -.04390    -.03820     .13266
  1.283      3.060      .11040     .00600     .06120     .01400     .02080     .01070     .01410    -.04290    -.03690     .13195
  1.174      6.090      .05350     .02040     .04150     .04640     .00930     .00880    -.00020    -.03470    -.02840     .11969
          GRADIENT    -.01589     .00507    -.00576    -.00025    -.00676    -.00164    -.00023     .00016     .00026     .00047

                                        CALSPAN T14-053      02 TI SI      IA36                      (AUF030)   ( 26 SEP 73  )

            REFERENCE DATA                                                                          PARAMETRIC DATA

SREF  =  2690.0004 FT.SQU   XMRP  =   953.0001 INCHES                               BETA   =      .000   MPSRA  =      30.000
LREF  =  1328.0002 INCHES   YMRP  =      .0000 INCHES                               POWER  =      .000   RUDDER =        .000
BREF  =  1328.0002 INCHES   ZMRP  =   400.0000 INCHES
SCALE =       .0190

                        RUN NO.   30/ 0    RN/L =    2.12    GRADIENT INTERVAL =  -5.00/  5.00

  MACH      ALPHA        CNW        CHW        CBW        CHR        CHEI       CHEO        CN         CLMF        CLM         CAF
  1.205     -8.100     -.20270    -.00250    -.08350     .04590     .11720     .05290    -.54750     .20760     .21360     .28243
  1.178     -4.030     -.02940    -.00590     .00300     .04550     .09840     .04740    -.25470     .09320     .09920     .27287
  1.205      3.980      .24410    -.01220     .14860     .04080     .06820    -.00050     .24900    -.11010    -.10360     .27519
  1.206      6.010      .31060    -.01470     .18050     .03820     .05960    -.01270     .37280    -.15810    -.15190     .24898
          GRADIENT     .03414    -.00079     .01818    -.00059    -.00377    -.00598     .06288    -.02538    -.02532     .00029
```

```
                                   CALSPAN T14-053     02 T1 S1      IA36                         (AUF031)   ( 26 SEP 73  )

             REFERENCE DATA                                                                       PARAMETRIC DATA

SREF  =  2690.0004 FT.SQU   XMRP  =   953.0001 INCHES                             ALPHA  =      .000   MPSRA   =    30.000
LREF  =  1328.0002 INCHES   YMRP  =      .0000 INCHES                             POWER  =      .000   RUDDER  =      .000
BREF  =  1328.0002 INCHES   ZMRP  =   400.0000 INCHES
SCALE =       .0190

                           RUN NO.   31/ 0    RN/L =   2.10    GRADIENT INTERVAL =  -5.00/  5.00

  MACH      BETA      CNW       CHW       CBW       CHR       CHEI      CHEO      CN        CLMF      CLM       CAF
  1.204    -6.080    .26520   -.02140    .13620   -.00550    .10060    .00740   -.00890   -.01480   -.00860    .24390
  1.204    -3.050    .21290   -.01570    .11230    .00950    .09240    .01760   -.00360   -.01470   -.00860    .24067
  1.203      .000    .14090   -.01140    .08350    .03600    .08310    .02730    .00910   -.01810   -.01210    .25048
  1.203     3.050    .02760   -.00580    .03890    .06560    .05840    .03460   -.00560   -.01240   -.00640    .23782
  1.202     6.080   -.04550   -.00080    .00770    .09810    .03960    .04320   -.01410   -.01100   -.00450    .23677
          GRADIENT   -.03038    .00162   -.01203    .00920   -.00557    .00279   -.00033    .00039    .00036   -.00047

                                   CALSPAN T14-053     02 T1 S1      1A36                         (AUF033)   ( 26 SEP 73  )

             REFERENCE DATA                                                                       PARAMETRIC DATA

SREF  =  2690.0004 FT.SQU   XMRP  =   953.0001 INCHES                             ALPHA  =      .000   MPSRA   =    30.000
LREF  =  1328.0002 INCHES   YMRP  =      .0000 INCHES                             POWER  =     1.000   OPR     =    36.200
BREF  =  1328.0002 INCHES   ZMRP  =   400.0000 INCHES                             SRMPR  =     2.330   RUDDER  =      .000
SCALE =       .0190

                           RUN NO.   33/ 0    RN/L =   2.12    GRADIENT INTERVAL =  -5.00/  5.00

  MACH      BETA      CNW       CHW       CBW       CHR       CHEI      CHEO      CN        CLMF      CLM       CAF
  1.197    -6.080    .27800   -.02140    .13780    .00470    .09900    .00300   -.00110   -.02240   -.01550    .24188
  1.200    -3.040    .22480   -.01510    .11520    .02500    .08780    .01260    .00990   -.02500   -.01870    .25102
  1.198      .000    .14950   -.01080    .08660    .03020    .07710    .02080    .02180   -.02780   -.02190    .25852
  1.195     3.050    .03070   -.00450    .03890    .04160    .04540    .02710    .00010   -.01740   -.01150    .24389
  1.205     6.080   -.02870    .00020    .01080    .07930    .03000    .03250   -.00590   -.01760   -.01170    .24039
          GRADIENT   -.03188    .00174   -.01253    .00273   -.00696    .00238   -.00161    .00125    .00118   -.00117
```

```
                                   CALSPAN T14-053     02 T1 S1      IA36                        (AUF034)   ( 26 SEP 73  )

          REFERENCE DATA                                                                              PARAMETRIC DATA

SREF  =  2690.0004 FT.SQU   XMRP  =   953.0001 INCHES                                  BETA    =      .000   MPSRA  =    30.000
LREF  =  1328.0002 INCHES   YMRP  =      .0000 INCHES                                  POWER   =     1.000   OPR    =    36.200
BREF  =  1328.0002 INCHES   ZMRP  =   400.0000 INCHES                                  SRMPR   =     2.330   RUDDER =      .000
SCALE =       .0190

                              RUN NO.   34/ 0    RN/L =   2.02    GRADIENT INTERVAL =  -5.00/  5.00

  MACH      ALPHA      CNW        CHW        CBW        CHR        CHEI       CHEO       CN         CLMF       CLM        CAF
  1.198    -8.180    -.20680    -.00190    -.08570     .03670     .11260     .05500    -.53310     .19800     .20370     .24259
  1.197    -4.140    -.02850    -.00500     .00020     .03060     .09030     .04300    -.24310     .08500     .09050     .25326
  1.194     -.050     .14320    -.01080     .08810     .03060     .07590     .02480     .01610    -.02390    -.01800     .25710
   .758     3.980     .27270    -.01130     .15390     .02780     .05940    -.00420     .26150    -.11760    -.11160     .25588
  1.202     6.040     .34670    -.01360     .18760     .02540     .04940    -.01780     .38190    -.16400    -.15820     .25282
          GRADIENT    .03711    -.00079     .01893    -.00034    -.00380    -.00581     .06215    -.02495    -.02489     .00032

                                   CALSPAN T14-053     02 T1 S1      IA36                        (AUF035)   ( 26 SEP 73  )

          REFERENCE DATA                                                                              PARAMETRIC DATA

SREF  =  2690.0004 FT.SQU   XMRP  =   953.0001 INCHES                                  BETA    =      .000   MPSRA  =    30.000
LREF  =  1328.0002 INCHES   YMRP  =      .0000 INCHES                                  POWER   =      .000   RUDDER =      .000
BREF  =  1328.0002 INCHES   ZMRP  =   400.0000 INCHES
SCALE =       .0190

                              RUN NO.   35/ 0    RN/L =   2.76    GRADIENT INTERVAL =  -5.00/  5.00

  MACH      ALPHA      CNW        CHW        CBW        CHR        CHEI       CHEO       CN         CLMF       CLM        CAF
   .900    -8.110    -.14390     .01220    -.06580     02040      .05590     .02980    -.49160     .16150     .16600     .10560
   .899    -4.060     .00430     .00280     .00620     .02160     .04610     .02650    -.23170     .05890     .06310     .11430
   .901       010     .13980    -.00900     .07250     .01890     .03890     .01520     .02040    -.04530    -.04150     .11492
   .899     4.030     .25590    -.03070     .12630     .01690     .04640     .02470     .24480    -.12270    -.11890     .11200
   .902     6.000     .29790    -.04070     .14060     .01600     .04730     .02120     .33510    -.14650    -.14300     .11077
          GRADIENT    .03110    -.00414     .01485    -.00058     .00003    -.00023     .05691    -.02245    -.02250    -.00028
```

```
                                     CALSPAN T14-053     02 TI SI     IA36                      (AUF036)   ( 26 SEP 73  )

                 REFERENCE DATA                                                                       PARAMETRIC DATA

SREF  =  2690.0004 FT.SQU   XMRP  =   953.0001 INCHES                              BETA    =     .000   MPSRA  =   30.000
LREF  =  1328.0002 INCHES   YMRP  =      .0000 INCHES                              POWER   =    1.000   OPR    =   28.310
BREF  =  1328.0002 INCHES   ZMRP  =   400.0000 INCHES                              SRMPR   =    2.020   RUDDER =     .000
SCALE =       .0190

                              RUN NO.   36/ 0    RN/L =   2.70    GRADIENT INTERVAL =  -5.00/  5.00

   MACH        ALPHA       CNW         CMW         CBW         CHR         CHEI        CHEO        CN          CLMF        CLM         CAF
    .899       -8.120     -.15080      .01240     -.07020      .02330      .05010      .03720     -.48980      .16350      .16990      .11585
    .898       -4.040     -.00377      .00280      .00550      .02140      .04810      .02590     -.22620      .05040      .06430      .12797
    .902         .030      .14510     -.00770      .07780      .02050      .03740      .01690      .01850     -.04130     -.03560      .13151
    .908        4.000      .25730     -.03110      .12940      .01990      .04860      .02840      .24840     -.12600     -.12060      .13021
    .901        6.020      .29420     -.04100      .14100      .01890      .05060      .01880      .34360     -.15110     -.14560      .12439
             GRADIENT      .03248     -.00421      .01530     -.00019      .00005      .00030      .05903     -.02294     -.02300      .00028

                                     CALSPAN T14-053     02 TI SI     IA36                      (AUF037)   ( 26 SEP 73  )

                 REFERENCE DATA                                                                       PARAMETRIC DATA

SREF  =  2690.0004 FT.SQU   XMRP  =   953.0001 INCHES                              ALPHA   =     .000   MPSRA  =   30.000
LREF  =  1328.0002 INCHES   YMRP  =      .0000 INCHES                              POWER   =    1.000   OPR    =   28.310
BREF  =  1328.0002 INCHES   ZMRP  =   400.0000 INCHES                              SRMPR   =    2.020   RUDDER =     .000
SCALE =       .0190

                              RUN NO.   37/ 0    RN/L =   2.72    GRADIENT INTERVAL =  -5.00/  5.00

   MACH        BETA        CNW         CMW         CBW         CHR         CHEI        CHEO        CN          CLMF        CLM         CAF
    .897       -6.080      .22310     -.04230      .10280      .00320      .07310      .02780      .00000     -.03440     -.02900      .12441
    .900       -3.050      .20050     -.02670      .09520      .01730      .06250      .01960      .01270     -.04050     -.03530      .12932
    .901         .000      .14510     -.00920      .07490      .01910      .04080      .01520      .01520     -.03960     -.03400      .13224
    .897        3.050      .11380      .00470      .06170      .02610      .02230      .01090      .01590     -.04280     -.03670      .12437
    .899        6.090      .05320      .02040      .04190      .05580      .00880      .00300      .00350     -.03450     -.02810      .12705
             GRADIENT     -.01421      .00515     -.00549      .00144     -.00661     -.00143      .00052     -.00038     -.00023     -.00081
```

```
                         CALSPAN T14-053     02 T1 S1     IA36                          (AUF038)  ( 26 SEP 73  )

          REFERENCE DATA                                                              PARAMETRIC DATA

SREF  =  2690.0004 FT.SQU   XMRP  =   953.0001 INCHES                   ALPHA  =      .000  MPSRA  =    30.000
LREF  =  1328.0002 INCHES   YMRP  =      .0000 INCHES                   POWER  =      .000  RUDDER =      .000
BREF  =  1328.0002 INCHES   ZMRP  =   400.0000 INCHES
SCALE =       .0190

                    RUN NO.   38/ 0    RN/L =   2.75   GRADIENT INTERVAL =  -5.00/  5.00

  MACH      BETA       CNW       CHW       CBW       CHR       CHEI      CHEO       CN       CLMF       CLM       CAF
  .904    -6.080     .22770   -.04020    .10530   -.00230    .06820    .02690    .00860   -.04060   -.03690    .11432
  .900    -3.050     .20440   -.02530    .03590    .01450    .05820    .02160    .01960   -.04470   -.04150    .12095
  .901      .000     .14460   -.00950    .07730    .01800    .03680    .01310    .02110   -.04410   -.04030    .13222
  .901     3.050     .10940    .00560    .06290    .01680    .01850    .00840    .01440   -.04340   -.03910    .12740
  .901     6.090     .05710    .01960    .04400    .04590    .00710    .00650   -.00070   -.03250   -.02790    .12536
        GRADIENT    -.01557    .00507   -.00557    .00038   -.00651   -.00216   -.00085    .00021    .00039    .00106

                         CALSPAN T14-053     02 T1 S1     IA36                          (AUF040)  ( 26 SEP 73  )

          REFERENCE DATA                                                              PARAMETRIC DATA

SREF  =  2690.0004 FT.SQU   XMRP  =   953.0001 INCHES                   BETA   =      .000  MPSRA  =    60.000
LREF  =  1328.0002 INCHES   YMRP  =      .0000 INCHES                   POWER  =      .000  RUDDER =      .000
BREF  =  1328.0002 INCHES   ZMRP  =   400 0000 INCHES
SCALE =       .0190

                    RUN NO.   40/ 0    RN/L =   2.13   GRADIENT INTERVAL =  -5.00/  5.00

  MACH      ALPHA      CNW       CHW       CBW       CHR       CHEI      CHEO       CN       CLMF       CLM       CAF
 1.203    -8.090    -.21690   -.00260   -.09310    .03520    .11720    .04160   -.58200    .22030    .22600    .23584
 1.204    -4.020    -.03130   -.00600   -.00430    .03470    .09920    .03500   -.26990    .09910    .10470    .25467
 1.205     -.020     .13820   -.01120    .08350    .03290    .08330    .01690    .00930   -.01800   -.01240    .25887
 1.203     4.010     .27400   -.01250    .15370    .03110    .06720   -.01350    .26750   -.11660   -.11080    .25433
 1.204     6.020     .34550   -.01520    .18790    .02830    .05690   -.02660    .39550   -.16730   -.16110    .25224
        GRADIENT     .03801   -.00081    .01967   -.00045   -.00399   -.00604    .06692   -.02686   -.02683   -.00004
```

```
                                       CALSFAN T14-053     02 T1 S1     1A36                        (AUF041)   ( 26 SEP 73  )

              REFERENCE DATA                                                                         PARAMETRIC DATA

SREF  =  2690.0004 FT.SQU   XMRP  =    953.0001 INCHES                                  ALPHA  =      .000   MPSRA  =    60.000
LREF  =  1328.0002 INCHES   YMRP  =       .0000 INCHES                                  POWER  =      .000   RUDDER =      .000
BREF  =  1328.0002 INCHES   ZMRP  =    400.0000 INCHES
SCALE =       .0190

                              RUN NO.   41/ 0    RN/L =   2.12    GRADIENT INTERVAL =  -5.00/  5.00

   MACH       BETA       CNW        CHW        CBW        CHR        CHEI       CHEO       CN         CLMF       CLM        CAF
   1.201     -6.080     .26680    -.02110     .13790    -.00160     .10480     .01000    -.01070    -.01480    -.00900     .28173
   1.201     -3.050     .21220    -.01550     .11270     .01390     .09480     .02220    -.00120    -.01610    -.01020     .27536
   1.202      3.050     .03110    -.00560     .03880     .07250     .05800     .04110    -.00810    -.01190    -.00590     .28623
   1.202      6.080    -.03920    -.00080     .00860     .10400     .03710     .04940    -.01150    -.01330    -.00690     .26060
            GRADIENT    -.02969     .00162    -.01211     .00951    -.00603     .00310    -.00113     .00069     .00070     .00178

                                       CALSPAN T14-053     02 T1 S1     1A36                        (AUF042)   ( 26 SEP 73  )

              REFERENCE DATA                                                                         PARAMETRIC DATA

SREF  =  2690.0004 FT.SQU   XMRP  =    953.0001 INCHES                                  BETA   =      .000   MPSRA  =    60.000
LREF  =  1328.0002 INCHES   YMRP  =       .0000 INCHES                                  POWER  =     1.000   OPR    =    36.200
BREF  =  1328.0002 INCHES   ZMRP  =    400.0000 INCHES                                  SRMPR  =     2.330   RUDDER =      .000
SCALE =       .0190

                              RUN NO.   42/ 0    RN/L =   2.04    GRADIENT INTERVAL =  -5.00/  5.00

   MACH       ALPHA      CNW        CHW        CBW        CHR        CHEI       CHEO       CN         CLMF       CLM        CAF
   1.201     -8.090    -.19950    -.00160    -.08350     .04260     .11210     .06390    -.52400     .19730     .20270     .27508
   1.196     -4.070    -.02300    -.00510     .00230     .04480     .09340     .05850    -.24090     .08370     .08920     .26357
   1.194      -.050     .14090    -.01040     .08540     .04190     .08020     .04060     .01340    -.02400    -.01850     .26973
   1.199      4.030     .25370    -.01140     .14900     .03700     .06430     .00790     .24610    -.11010    -.10450     .26318
   1.201      5.990     .32040    -.01340     .18120     .03280     .05400    -.00280     .36240    -.15530    -.14980     .26206
            GRADIENT     .03414    -.00078     .01810    -.00096    -.00359    -.00625     .06012    -.02392    -.02391    -.00005
```

```
                                   CALSPAN T14-053     02 T1 S1     IA36                          (AUF043)   ( 26 SEP 73  )

            REFERENCE DATA                                                                         PARAMETRIC DATA

SREF  =  2690.0004 FT.SQU   XMRP  =   953.0001 INCHES                               ALPHA  =      .000   MPSRA  =    60.000
LREF  =  1328.0002 INCHES   YMRP  =      .0000 INCHES                               POWER  =     1.000   OPR    =    36.200
BREF  =  1328.0002 INCHES   ZMRP  =   400.0000 INCHES                               SRMPR  =     2.330   RUDDER =      .000
SCALE =       .0190

                          RUN NO.   43/ 0   RN/L =   2.05   GRADIENT INTERVAL =  -5.00/  5 00

   MACH      BETA       CNW        CHW        CBW        CHR        CHEI       CHEO       CN         CLMF       CLM        CAF
   1.194    -6.070     .27280    -.02160     .13980     .00150     .10110     .00680     .00070    -.02240    -.01610     .24355
   1.194    -3.050     .22070    -.01540     .11480     .02090     .09120     .02020     .00850    -.02290    -.01680     .25447
   1.194      .000     .15020    -.01040     .08560     .03010     .07880     .03060     .01650    -.02440    -.01890     .26496
   1.193     3.050     .02420    -.00440     .03900     .03660     .04530     .03230     .00160    -.01930    -.01380     .24921
   1.196     6.080    -.03800     .00100     .00910     .07480     .02580     .03780    -.00550    -.01810    -.01250     .24589
          GRADIENT    -.03221     .00180    -.01259     .00257    -.00752     .00198    -.00113     .00059     .00049    -.00086

                                   CALSPAN T14-053     02 T1 S1     IA36                          (AUF044)   ( 26 SEP 73  )

            REFERENCE DATA                                                                         PARAMETRIC DATA

SREF  =  2690.0004 FT.SQU   XMRP  =   953.0001 INCHES                               BETA   =      .000   MPSRA  =    60.000
LREF  =  1328.0002 INCHES   YMRP  =      .0000 INCHES                               POWER  =     1.000   OPR    =    28.310
BREF  =  1328.0002 INCHES   ZMRP  =   400.0000 INCHES                               SRMPR  =     2.020   RUDDER =      .000
SCALE =       .0190

                          RUN NO.   44/ 0   RN/L =   2.68   GRADIENT INTERVAL =  -5.00/  5.00

   MACH     ALPHA       CNW        CHW        CBW        CHR        CHEI       CHEO       CN         CLMF       CLM        CAF
    .900    -8.080    -.14980     .01240    -.06560     .02160     .05730     .03800    -.47640     .15770     .16420     .11216
    .895    -4.050    -.00600     .00160     .00400     .02540     .05180     .03770    -.22400     .05870     .06480     .11809
    .898     -.040     .13810    -.00780     .07640     .02340     .03920     .02540     .01960    -.04380    -.03830     .12531
    .896     3.970     .24710    -.03160     .12740     .02040     .05190     .03000     .24350    -.12460    -.11920     .12371
    .907     6.010     .28160    -.04090     .13810     .02070     .05380     .02760     .34170    -.15280    -.14770     .13446
          GRADIENT     .03156    -.00414     .01539    -.00062     .00001    -.00096     .05829    -.02286    -.02294     .00070
```

```
                                    CALSPAN T14-053     02 T1 S1      IA36                           (AUF045)   ( 26 SEP 73  )

                REFERENCE DATA                                                                        PARAMETRIC DATA

SREF  =  2690.0004 FT.SQU   XMRP  =    953.0001 INCHES                               ALPHA  =      .000   MPSRA  =     60.000
LREF  =  1328.0002 INCHES   YMRP  =       .0000 INCHES                               POWER  =     1.000   OPR    =     28.310
BREF  =  1328.0002 INCHES   ZMRP  =    400.0000 INCHES                               SRMPR  =     2.020   RUDDER =       .000
SCALE =       .0190

                          RUN NO.   45/ 0    RN/L =   2.73   GRADIENT INTERVAL =  -5.00/  5.00

   MACH      BETA       CNW       CHW       CBW       CHR       CHEI      CHEO      CN        CLMF      CLM       CAF
   .897     -6.080    .20680   -.04160    .03940    .00550    .07550    .03220   -.00390   -.03320   -.02780    .12110
   .899     -3.050    .19720   -.02670    .03470    .02340    .06550    .03030    .01210   -.04100   -.03580    .12745
   .898       .000    .14260   -.00840    .07570    .02460    .04180    .02510    .01740   -.04440   -.03890    .12981
   .898      3.050    .10680    .00640    .06120    .03240    .02250    .01870    .01340   -.04350   -.03740    .12725
   .900      6.030    .04420    .02170    .03950    .06260    .01050    .01200   -.00750   -.02920   -.02270    .12635
          GRADIENT   -.01482    .00543   -.00549    .00148   -.00705   -.00190    .00021   -.00041   -.00026   -.00003

                                    CALSPAN T14-053     02 T1 S1      IA36                           (AUF046)   ( 26 SEP 73  )

                REFERENCE DATA                                                                        PARAMETRIC DATA

SREF  =  2690.0004 FT.SQU   XMRP  =    953.0001 INCHES                               ALPHA  =      .000   MPSRA  =     60.000
LREF  =  1328.0002 INCHES   YMRP  =       .0000 INCHES                               POWER  =      .000   RUDDER =       .000
BREF  =  1328.0002 INCHES   ZMRP  =    400.0000 INCHES
SCALE =       .0190

                          RUN NO.   46/ 0    RN/L =   2.77   GRADIENT INTERVAL =  -5.00/  5.00

   MACH      BETA       CNW       CHW       CBW       CHR       CHEI      CHEO      CN        CLMF      CLM       CAF
   .898     -6.080    .21600   -.04000    .10230    .00450    .07190    .03750    .00110   -.03870   -.03420    .10510
   .902     -3.050    .20040   -.02460    .09710    .02170    .06150    .03170    .01110   -.04170   -.03790    .11995
   .899       .000    .14700   -.00830    .07670    .02510    .03990    .02620    .01700   -.04400   -.03970    .11635
   .901      3.060    .10840    .00660    .06270    .02270    .02020    .01830    .01320   -.04370   -.03950    .12245
   .900      6.090    .05620    .02050    .04310    .05440    .00940    .01640   -.00590   -.03100   -.02610    .11455
          GRADIENT   -.01506    .00511   -.00563    .00016   -.00676   -.00219    .00034   -.00033   -.00026    .00041
```

```
                                   CALSPAN T14-053     02 T1 S1     IA36                      (AUF047)   ( 26 SEP 73  )

          REFERENCE DATA                                                                   PARAMETRIC DATA

SREF  =  2690.0004 FT.SQU   XMRP  =   953.0001 INCHES                        BETA   =      .000   MPSRA  =    60.000
LREF  =  1328.0002 INCHES   YMRP  =      .0000 INCHES                        POWER  =      .000   RUDDER =      .000
BREF  =  1328.0002 INCHES   ZMRP  =   400.0000 INCHES
SCALE =       .0190

                      RUN NO.   47/ 0    RN/L =   2.75    GRADIENT INTERVAL =  -5.00/  5.00

  MACH      ALPHA      CNW        CHW        CBW        CHR        CHEI       CHEO       CN         CLMF       CLM        CAF
  .902     -8.070    -.13670     .01300    -.06020     .02980     .05510     .04150    -.47350     .15470     .15890     .11613
  .900     -4.090    -.00130     .00380     .00480     .02910     .04600     .03840    -.22840     .05730     .06150     .11660
  .899       .050     .14210    -.00800     .07690     .02720     .03850     .02880     .02000    -.04510    -.04110     .11799
  .897      4.010     .24950    -.03040     .12570     .02560     .04920     .03750     .23590    -.11930    -.11540     .11140
  .900      5.980     .28400    -.04040     .13570     .02420     .05230     .03390     .32450    -.14320    -.13940     .11536
          GRADIENT    .03099    -.00421     .01494    -.00043     .00038    -.00013     .05734    -.02182    -.02186    -.00063

                                   CALSPAN T14-053     02 T1 S1     IA36                      (AUF048)   ( 26 SEP 73  )

          REFERENCE DATA                                                                   PARAMETRIC DATA

SREF  =  2690.0004 FT.SQU   XMRP  =   953.0001 INCHES                        BETA   =      .000   MPSRA  =    90.000
LREF  =  1328.0002 INCHES   YMRP  =      .0000 INCHES                        POWER  =      .000   RUDDER =      .000
BREF  =  1328.0002 INCHES   ZMRP  =   400.0000 INCHES
SCALE =       .0190

                      RUN NO.   48/ 0    RN/L =   2.13    GRADIENT INTERVAL =  -5.00/  5.00

  MACH      ALPHA      CNW        CHW        CBW        CHR        CHEI       CHEO       CN         CLMF       CLM        CAF
 1.200     -8.110    -.19120    -.00290    -.08090     .03640     .11770     .04940    -.53290     .20240     .20810     .29309
 1.200     -4.060    -.01630    -.00610     .00310     .03740     .09890     .04590    -.24920     .09120     .09700     .30708
 1.201      -.020     .13710    -.01100     .08340     .03620     .08500     .02810     .00820    -.01710    -.01120     .30390
 1.202      4.010     .25750    -.01170     .14640     .03550     .07020     .00150     .24640    -.10830    -.10220     .30095
 1.200      6.010     .32270    -.01460     .17710     .03320     .06010    -.00810     .36290    -.15400    -.14780     .29764
          GRADIENT    .03393    -.00069     .01776    -.00024    -.00356    -.00550     .06141    -.02472    -.02468    -.00076
```

```
                                   CALSPAN T14-053     02 T1 S1     IA36                      (AUF049)   ( 26 SEP 73  )

                REFERENCE DATA                                                                     PARAMETRIC DATA

SREF  =  2690.0004 FT.SQU   XMRP  =   953.0001 INCHES                               ALPHA  =      .000   MPSRA  =    90.000
LREF  =  1328.0002 INCHES   YMRP  =      .0000 INCHES                               POWER  =      .000   RUDDER =      .000
BREF  =  1328.0002 INCHES   ZMRP  =   400.0000 INCHES
SCALE =       .0190

                         RUN NO.   49/ 0   RN/L =   2.12   GRADIENT INTERVAL =  -5.00/  5.00

  MACH       BETA       CNW       CHW       CBW       CHR       CHEI      CHEO       CN       CLMF       CLM       CAF
  1.201    -6.[illegible]      .26120   -.02140    .13330   -.01120    .09940    .00910   -.01040   -.01170   -.00580    .28306
  1.202    -3.050    .20380   -.01560    .10920    .00440    .09090    .01820   -.00370   -.01200   -.00610    .28721
  1.205      .000    .13830   -.01180    .08190    .03230    .08500    .02740    .00760   -.01600   -.01000    .28689
  1.199     3.050    .03290   -.00570    .03840    .06080    .06270    .03560   -.00840   -.00880   -.00250    .28196
  1.201     6.080   -.04180   -.00160    .00950    .09320    .04140    .04490   -.01780   -.00750   -.00090    .26416
         GRADIENT   -.02802    .00162   -.01161    .00925   -.00462    .00285   -.00077    .00052    .00059   -.00086

                                   CALSPAN T14-053     02 T1 S1     IA36                      (AUF050)   ( 26 SEP 73  )

                REFERENCE DATA                                                                     PARAMETRIC DATA

SREF  =  2690.0004 FT.SQU   XMRP  =   953.0001 INCHES                               BETA   =      .000   MPSRA  =    90.000
LREF  =  1328.0002 INCHES   YMRP  =      .0000 INCHES                               POWER  =     1.000   OPR    =    36.200
BREF  =  1328.0002 INCHES   ZMRP  =   400.0000 INCHES                               SRMPR  =     2.330   RUDDER =      .000
SCALE =       .0190

                         RUN NO.   50/ 0   RN/L =   2.04   GRADIENT INTERVAL =  -5.00/  5.00

  MACH      ALPHA       CNW       CHW       CBW       CHR       CHEI      CHEO       CN       CLMF       CLM       CAF
  1.193    -8.100   -.19560   -.00170   -.08160    .03040    .10700    .04980   -.51300    .19030    .19630    .25399
  1.198    -4.070   -.01450   -.00510    .00510    .03170    .08930    .04740   -.23800    .08720    .09250    .27509
  1.201     -.040    .13980   -.00980    .08500    .03110    .07750    .02880    .01360   -.01900   -.01390    .28525
  1.192     3.970    .25860   -.01190    .14770    .01800    .06050   -.00310    .26010   -.11850   -.11260    .25749
  1.190     6.020    .32910   -.01320    .18190    .01430    .05180   -.01360    .37060   -.16000   -.15430    .25693
         GRADIENT    .03397   -.00085    .01774   -.00170   -.00358   -.00628    .06195   -.02559   -.02551   -.00219
```

```
                                 CALSPAN T14-053     02 T1 S1     IA36                         (AUF051)   ( 26 SEP 73  )

          REFERENCE DATA                                                                         PARAMETRIC DATA

SREF  =  2690.0004 FT.SQU   XMRP  =   953.0001 INCHES                              ALPHA  =     .000  MPSRA  =    90.000
LREF  =  1328.0002 INCHES   YMRP  =      .0000 INCHES                              POWER  =    1.000  OPR    =    36.200
BREF  =  1328.0002 INCHES   ZMRP  =   400.0000 INCHES                              SRMPR  =    2.330  RUDDER =      .000
SCALE =      .0190

                       RUN NO.   51/ 0    RN/L =   2.00    GRADIENT INTERVAL =  -5.00/  5.00

  MACH        BETA       CNW        CHW        CBW        CHR        CHEI       CHEO       CN         CLMF       CLM        CAF
  1.190     -6.070     .27830    -.02170     .13850     .00310     .09890     .00950    -.00480    -.01890    -.01300     .24557
  1.182     -3.040     .21970    -.01560     .11300     .01700     .08550     .01600     .00910    -.02510    -.01910     .24616
  1.190       .000     .14640    -.01060     .08420     .01960     .07540     .02560     .01760    -.02560    -.02010     .25740
  1.188      3.050     .02820    -.00420     .03820     .02900     .04390     .03020     .00150    -.02040    -.01460     .24491
  1.195      6.080    -.03370     .00120     .00920     .05920     .02350     .03560    -.00660    -.01720    -.01170     .24253
          GRADIENT    -.03145     .00187    -.01228     .00197    -.00683     .00233    -.00125     .00077     .00074    -.00021

                                 CALSPAN T14-053     02 T1 S1     IA36                         (AUF052)   ( 26 SEP 73  )

          REFERENCE DATA                                                                         PARAMETRIC DATA

SREF  =  2690.0004 FT.SQU   XMRP  =   953.0001 INCHES                              BETA   =     .000  MPSRA  =    90.000
LREF  =  1328.0002 INCHES   YMRP  =      .0000 INCHES                              POWER  =     .000  RUDDER =      .000
BREF  =  1328.0002 INCHES   ZMRP  =   400.0000 INCHES
SCALE =      .0190

                       RUN NO.   52/ 0    RN/L =   2.74    GRADIENT INTERVAL =  -5.00/  5.00

  MACH        ALPHA      CNW        CHW        CBW        CHR        CHEI       CHEO       CN         CLMF       CLM        CAF
   .916     -8.090    -.13430     .01180    -.06140     .01680     .05680     .03360    -.47580     .15370     .15890     .10302
   .901     -4.040     .00610     .00380     .00720     .01680     .04470     .02830    -.22210     .05350     .05800     .11501
   .901       .000     .14380    -.00840     .07660     .01510     .03890     .02010     .02130    -.04690    -.04260     .11114
   .903      4.000     .25390    -.03040     .12510     .01360     .04830     .02970     .23690    -.12070    -.11670     .11225
   .915      5.990     .28600    -.04070     .13480     .01300     .05100     .02480     .32860    -.14550    -.14150     .10351
          GRADIENT     .03083    -.00425     .01467    -.00040     .00044     .00017     .05709    -.02167    -.02173    -.00034
```

```
DATE 05 NOV 75            TABULATED DATA FOR CAL T14-053 (IA36)                                  (AUF053)   ( 26 SEP 73  )
                                   CALSPAN T14-053      02 T1 S1      IA36                  PARAMETRIC DATA

          REFERENCE DATA                                                        ALPHA  =     .000   MPSRA  =     90.000
                                                                                POWER  =     .000   RUDDER =       .000
SREF  =  2690.0004 FT.SQU   XMRP  =    953.0001 INCHES
LREF  =  1328.0002 INCHES   YMRP  =       .0000 INCHES
BREF  =  1328.0002 INCHES   ZMRP  =    400.0000 INCHES
SCALE =      .0190                                      GRADIENT INTERVAL =  -5.00/  5.00

                       RUN NO.   53/ 0     RN/L =    2.72

 MACH     BETA      CNW       CHW       CBW       CHR       CHEI      CHEO      CN        CLMF      CLM       CAF
  .903   -6.080    .23000   -.03950    .10340   -.00500    .05950    .01910    .00090   -.03770   -.03350    .11027
  .903   -3.050    .20880   -.02480    .09620    .01080    .05870    .01330    .01330   -.04280   -.03920    .11817
  .904     .000    .15660   -.00720    .07670    .01070    .03480    .00700    .01800   -.04340   -.03970    .12834
  .902    3.050    .11810    .00570    .06350    .00780    .01820    .00030    .01490   -.04490   -.04060    .12195
  .901    6.090    .06420    .02050    .04210    .03930    .00700   -.00180   -.00440   -.03270   -.02790    .11077
        GRADIENT  -.01487    .00500   -.00536   -.00049   -.00664   -.00213    .00026   -.00034   -.00023    .00062

                                                                                            (AUF(54)   ( 26 SEP 73  )
                                   CALSPAN T14-053      02 T1 S1      IA36                  PARAMETRIC DATA

          REFERENCE DATA                                                        BETA   =     .000   MPSRA  =     90.000
                                                                                POWER  =    1.000   OPR    =     28.310
SREF  =  2690.0004 FT.SQU   XMRP  =    953.0001 INCHES                          SRMPR  =    2.020   RUDDER =       .000
LREF  =  1328.0002 INCHES   YMRP  =       .0000 INCHES
BREF  =  1328.0002 INCHES   ZMRP  =    400.0000 INCHES
SCALE =      .0190                                      GRADIENT INTERVAL =  -5.00/  5.00

                       RUN NO.   54/ 0     RN/L =    2.67

 MACH     ALPHA     CNW       CHW       CBW       CHR       CHEI      CHEO      CN        CLMF      CLM       CAF
  .899   -8.100   -.14550    .01120   -.06440    .01360    .05920    .03600   -.47350    .15690    .16320    .11513
  .903   -4.020   -.00130    .00370    .00480    .01420    .04790    .02730   -.21880    .05460    .06000    .13583
  .904     .020    .13730   -.00780    .07680    .01030    .03940    .01850    .03600   -.05880   -.05350    .12919
  .900    4.060    .24300   -.03050    .12520    .00940    .04980    .02470    .25160   -.13090   -.12590    .12886
 1.030    6.060    .28000   -.04130    .13830    .00840    .05310    .01790    .35320   -.16150   -.15530    .12371
        GRADIENT   .03024   -.00423    .01490   -.00059    .00024   -.00032    .05822   -.02296   -.02301   -.00086
```

CALSPAN T14-053 02 T1 S1 IA36 (AUF055) (26 SEP 73)

REFERENCE DATA

SREF = 2690.0004 FT.SQU XMRP = 953.0001 INCHES
LREF = 1328.0002 INCHES YMRP = .0000 INCHES
BREF = 1328.0002 INCHES ZMRP = 400.0000 INCHES
SCALE = .0190

PARAMETRIC DATA

ALPHA = .000 MPSRA = 90.000
POWER = 1.000 OPR = 28.310
SRMPR = 2.020 RUDDER = .000

RUN NO. 55/ 0 RN/L = 2.59 GRADIENT INTERVAL = -5.00/ 5.00

MACH	BETA	CNW	CHW	CBW	CHR	CHEI	CHEO	CN	CLMF	CLM	CAF
.898	-6.000	.21230	-.04200	.10040	.00190	.07490	.03010	.00190	-.03730	-.03200	.12568
1.006	-3.050	.19810	-.02750	.09470	.01500	.06520	.02460	.01540	-.04350	-.03840	.12616
.899	.000	.14010	-.00860	.07470	.01050	.04190	.01770	.02130	-.04630	-.04120	.13422
.898	3.050	.10480	.00590	.06010	.01080	.02260	.01080	.01350	-.04330	-.03800	.13341
.899	6.080	.05230	.02020	.04080	.04210	.01050	.00830	-.00640	-.03020	-.02430	.12654
	GRADIENT	-.01530	.00548	-.00567	-.00069	-.00698	-.00226	-.00031	.00003	.00007	.00119

CALSPAN T14-053 02 T1 S1 IA36 (AUF059) (26 SEP 73)

REFERENCE DATA

SREF = 2690.0004 FT.SQU XMRP = 953.0001 INCHES
LREF = 1328.0002 INCHES YMRP = .0000 INCHES
BREF = 1328.0002 INCHES ZMRP = 400.0000 INCHES
SCALE = .0190

PARAMETRIC DATA

BETA = .000 MPSRA = 120.000
POWER = 1.000 OPR = 36.200
SRMPR = 2.330 RUDDER = .000

RUN NO. 59/ 0 RN/L = .18 GRADIENT INTERVAL = -5.00/ 5.00

MACH	ALPHA	CNW	CHW	CBW	CHR	CHEI	CHEO	CN	CLMF	CLM	CAF
1.196	-8.110	-.20000	-.00130	-.08440	.04680	.10660	.04850	-.51390	.19150	.19710	.26655
1.200	-4.060	-.01900	-.00490	.00300	.04390	.09010	.04480	-.24440	.09160	.09650	.29614
1.198	.020	.13420	-.00990	.08460	.04140	.07620	.02630	.02340	-.02830	-.02330	.28433
1.205	4.090	.25510	-.01050	.1473	.03830	.06230	-.00040	.25350	-.11450	-.10940	.28819
1.203	6.030	.32320	-.01330	.1776	.03420	.05400	-.01190	.36470	-.15870	-.15310	.27884
	GRADIENT	.03363	-.00069	.0177	-.00069	-.00341	-.00555	.06109	-.02529	-.02527	-.00098

```
DATE 05 NOV 75            TABULATED DATA FOR CAL T14-053 (IA36)                                                              PAGE   82

                                        CALSPAN T14-053     02 T1 S1     IA36                              (AUF060)    ( 26 SEP 73  )

            REFERENCE DATA                                                                                  PARAMETRIC DATA

SREF  =  2690.0004 FT.SQU   XMRP  =   953.0001 INCHES                                    ALPHA  =      .000   MPSRA  =   120.000
LREF  =  1328.0002 INCHES   YMRP  =      .0000 INCHES                                    POWER  =     1.000   OPR    =    35.200
BREF  =  1328.0002 INCHES   ZMRP  =   400.0000 INCHES                                    SRMPP  =     2.330   RUDDER =      .000
SCALE =       .0190

                              RUN NO.   60/ 0    RN/L =   2.08    GRADIENT INTERVAL =  -5.00/  5.00

   MACH      BETA       CNW        CHW        CBW        CHR        CHEI       CHEO        CN        CLMF       CLM        CAF
   1.195    -6.080     .27090    -.02200     .13760     .00120     .09490    -.00240     .00490    -.02320    -.01730     .25471
   1.202    -3.050     .21180    -.01480     .11010     .01920     .08650     .01240    -.00060    -.01730    -.01160     .25959
   1.199      .000     .14180    -.01040     .08430     .03460     .07470     .01880     .02080    -.02440    -.01950     .25985
   1.198     3.050     .03090    -.00360     .03990     .04320     .04810     .02310     .00200    -.01710    -.01130     .25335
   1.194     6.080    -.03930     .00100     .00930     .08060     .02710     .03080    -.00650    -.01650    -.01070     .24526
            GRADIENT   -.02966     .00184    -.01151     .00393    -.00630     .00175     .00043     .00003     .00005    -.00102

                                        CALSPAN T14-053     02 T1 S1     IA36                              (AUF061)    ( 26 SEP 73  )

            REFERENCE DATA                                                                                  PARAMETRIC DATA

SREF  =  2690.0004 FT.SQU   XMRP  =   953.0001 INCHES                                    ALPHA  =      .000   MPSRA  =   120.000
LREF  =  1328.0002 INCHES   YMRP  =      .0000 INCHES                                    POWER  =      .000   RUDDER =      .000
BREF  =  1328.0002 INCHES   ZMRP  =   400.0000 INCHES
SCALE =       .0190

                              RUN NO.   61/ 0    RN/L =   2.05    GRADIENT INTERVAL =  -5.00/  5.00

   MACH      BETA       CNW        CHW        CBW        CHR        CHEI       CHEO        CN        CLMF       CLM        CAF
   1.203    -6.080     .27340    -.02140     .13550    -.00760     .09760     .00140    -.00710    -.01340    -.00730     .25480
   1.204    -3.050     .21990    -.01510     .11150     .00670     .08980     .01220    -.00130     .01350    -.00740     .25583
   1.201      .000     .14790    -.01110     .08340     .03270     .08100     .02250     .01290    -.01830    -.01240     .26395
   1.203     3.050     .02870    -.00480     .03850     .06250     .05660     .02970    -.00410    -.01130    -.00540     .25750
   1.205     6.080    -.04230    -.00050     .00940     .09560     .03820     .03740    -.00930    -.01190    -.00570     .24989
            GRADIENT   -.03118     .00169    -.01197     .00915    -.00544     .00287    -.00046     .00036     .00033     .00027
```

```
                                   CALSPAN T14-053    02 T1 S1     1A36                        (AUF062)   ( 26 SEP 73  )

          REFERENCE DATA                                                                         PARAMETRIC DATA

SREF  =  2690.0004 FT.SQU   XMRP  =   953.0001 INCHES                                   BETA   =      .000   MPSRA  =   120.000
LREF  =  1328.0002 INCHES   YMRP  =      .0000 INCHES                                   POWER  =      .000   RUDDER =      .000
BREF  =  1328.0002 INCHES   ZMRP  =   400.0000 INCHES
SCALE =       .0190

                        RUN NO.   62/ 0    RN/L =   2.10    GRADIENT INTERVAL =  -5.00/  5.00

  MACH      ALPHA      CNW        CHW        CBW        CHR        CHEI       CHEO       CN         CLMF       CLM        CAF
  1.203     -8.070    -.19490    -.00210    -.08070     .03770     .11400     .04720    -.52880     .20090     .20690     .25498
  1.204     -4.040    -.01810    -.00570     .00370     .03790     .09500     .04260    -.24560     .09090     .09650     .26219
  1.205      -.020     .14010    -.01060     .08400     .03520     .08110     .02360     .01240    -.01800    -.01240     .26383
  1.201      4.010     .26650    -.01550     .15180     .02870     .06650    -.01000     .25270    -.10960    -.10370     .25652
  1.203      6.030     .31410    -.01480     .17480     .02690     .05670    -.02240     .36360    -.15300    -.14690     .25137
          GRADIENT     .03535    -.00122     .01840    -.00114    -.00354    -.00653     .06190    -.02491    -.02487    -.00070

                                   CALSPAN T14-053    02 T1 S1     1A36                        (AUF063)   ( 26 SEP 73  )

          REFERENCE DATA                                                                         PARAMETRIC DATA

SREF  =  2690.0004 FT.SQU   XMRP  =   953.0001 INCHES                                   BETA   =      .000   MPSRA  =   120.000
LREF  =  1326.0002 INCHES   YMRP  =      .0000 INCHES                                   POWER  =     1.000   OPR    =    28.310
BREF  =  1328.0002 INCHES   ZMRP  =   400.0000 INCHES                                   SRMPR  =     2.020   RUDDER =      .000
SCALE =       .0190

                        RUN NO.   63/ 0    RN/L =   2.65    GRADIENT INTERVAL =  -5.00/  5.00

  MACH      ALPHA      CNW        CHW        CBW        CHR        CHEI       CHEO       CN         CLMF       CLM        CAF
   .900     -8.120    -.14330     .01260    -.06380     .02210     .05590     .02940    -.47240     .15620     .16220     .11923
   .898     -4.010     .00000     .00240     .00730     .02300     .04730     .02280    -.22350     .06050     .06520     .12083
   .900       .040     .13910    -.00900     .07520     .02010     .04030     .01000     .02250    -.04650    -.04120     .12794
   .899      4.090     .25510    -.03070     .12670     .01490     .04860     .02180     .24540    -.12600    -.12080     .11844
   .896      6.040     .28550    -.04020     .13570     .01460     .04820     .01630     .33870    -.15200    -.14680     .11781
          GRADIENT     .03149    -.00409     .01474    -.00100     .00016    -.00012     .05789    -.02302    -.02309    -.00030
```

```
                                  CALSPAN T14-053     02 T1 S1     IA36                      (AUF064)    ( 26 SEP 73 )

                REFERENCE DATA                                                                       PARAMETRIC DATA

SREF  =  2590.0004 FT.SQU   XMRP  =   953.0001 INCHES                           ALPHA  =      .000   MPSRA   =   120.000
LREF  =  1328.0002 INCHES   YMRP  =      .0000 INCHES                           POWER  =     1.000   OPR     =    29.310
BREF  =  1328.0002 INCHES   ZMRP  =   400.0000 INCHES                           SRMPR  =     2.020   RUDDER  =      .000
SCALE =      .0190

                          RUN NO.   64/ 0    RN/L =   2.71    GRADIENT INTERVAL =  -5.00/  5.00

   MACH       BETA       CNW        CHW        CBW        CHR        CHEI       CHEO       CN         CLMF       CLM        CAF
   .903     -6.080     .22290    -.03880     .10240    -.00040     .06630     .02350     .00350    -.03840    -.03480     .11044
   .904     -3.050     .20100    -.02500     .09570     .01690     .06130     .01770     .01600    -.04130    -.03660     .13388
   .899       .000     .13320    -.00930     .07290     .01260     .03960     .00620     .02300    -.04560    -.04050     .13107
   .901      3.050     .10530     .00630     .05930     .01860     .01820     .00340     .01300    -.04080    -.03520     .13040
   .902      6.090     .04820     .02040      03940     .05030     .00840     .00330    -.00280    -.03080    -.02470     .12727
           GRADIENT   -.01569     .00513    -.00597     .00028    -.00707    -.00234    -.00049     .00008     .00023    -.00057

                                  CALSPAN T14-053     02 T1 S1     IA36                      (AUF065)    ( 26 SEP 73 )

                REFERENCE DATA                                                                       PARAMETRIC DATA

SREF  =  2690.0004 FT.SQU   XMRP  =   953.0001 INCHES                           ALPHA  =      .000   MPSRA   =   120.000
LREF  =  1328.0002 INCHES   YMRP  =      .0000 INCHES                           POWER  =      .000   RUDDER  =      .000
BREF  =  1328 0002 INCHES   ZMRP  =   400.0000 INCHES
SCALE =      .0190

                          RUN NO.   65/ 0    RN/L =   2.74    GRADIENT INTERVAL =  -5.00/  5.00

   MACH       BETA       CNW        CHW        CBW        CHR        CHEI       CHEO       CN         CLMF       CLM        CAF
   .904     -6.080     .22290    -.03880     .10250    -.00010     .06660     .02430     .00540    -.03880    -.03550     .11065
   .902     -3.050     .20220    -.02470     .09460     .01370     .05690     .01840     .01160    -.04060    -.03740     .11349
   .904       .000     .14870    -.00790     .07510     .01580     .03620     .01030     .01980    -.04410    -.04060     .11945
   .901      3.050     .10600     .00450     .05910     .01270     .02100     .00290     .01480    -.04380    -.03990     .12222
    903      6.090     .05500     .01960     .04060     .03940     .00900     .00130    -.00240    -.03230    -.02800     .11878
           GRADIENT   -.01577     .00479    -.00582    -.00016    -.00589    -.00254     .00052    -.00052    -.00041     .00143
```

```
                                   CALSPAN T14-053     02 T1 S1     IA36                        (AUF068)   ( 26 SEP 73  )

             REFERENCE DATA                                                                       PARAMETRIC DATA

SREF  =  2690.0004 FT.SQU   XMRP  =   953.0001 INCHES                                BETA   =      .000  MPSRA  =   120.000
LREF  =  1328.0002 INCHES   YMRP  =      .0000 INCHES                                POWER  =      .000  RUDDER =      .000
BREF  =  1328.0002 INCHES   ZMRP  =   400.0000 INCHES
SCALE =       .0190

                       RUN NO.   66/ 0    RN/L =     .24    GRADIENT INTERVAL =  -5.00/  5.00

  MACH       ALPHA       CNW        CHW        CBW        CHR        CHEI       CHEO       CN         CLMF       CLM        CAF
  .903      -8.050    -.12480     .01270    -.05990     .01720     .05130     .02420    -.46760     .15160     .15550     .11573
  .903      -4.040     .01400     .00380     .00910     .01660     .04160     .01850    -.21770     .05250     .05630     .12006
  .901        .020     .14040    -.00900     .07330     .01450     .03720     .00740     .01820    -.04250    -.03890     .12065
  .901       3.990     .25500    -.03030     .1251      .01250     .04550     .01870     .23400    -.11880    -.11550     .11552
  .900       6.040     .28350    -.03940     .13320     .01140     .04350     .01360     .32730    -.14450    -.14110     .10900
          GRADIENT     .03002    -.00424     .01445    -.00051     .00048     .00001     .05626    -.02134    -.02140    -.00056

                                   CALSPAN T14-053     02 T1 S1     IA36                        (AUF071)   ( 26 SEP 73  )

             REFERENCE DATA                                                                       PARAMETRIC DATA

SREF  =  2690.0004 FT.SQU   XMRP  =   953.0001 INCHES                                BETA   =      .000  MPSRA  =   150.000
LREF  =  1328.0002 INCHES   YMRP  =      .0000 INCHES                                POWER  =      .000  RUDDER =      .000
BREF  =  1328.0002 INCHES   ZMRP  =   400.0000 INCHES
SCALE =       .0190

                       RUN NO.   71/ 0    RN/L =    2.76    GRADIENT INTERVAL =  -5.00/  5.00

  MACH       ALPHA       CNW        CHW        CBW        CHR        CHEI       CHEO       CN         CLMF       CLM        CAF
  .904      -8.130    -.12680     .01210    -.06090     .02270     .05260     .02070    -.47310     .15600     .16010     .12407
  .905      -4.050     .01230     .00310     .00860     .02140     .04280     .01370    -.22220     .05510     .05900     .12036
  .903        .020     .14050    -.00940     .07130     .01880     .03780     .00270     .01230    -.03720    -.03360     .12312
  .903       4.020     .25510    -.02990     .12360     .01680     .04500     .01440     .23000    -.11560    -.11220     .11697
  .901       6.010     .29140    -.03980     .13560     .01560     .04550     .01100     .32470    -.14330    -.13980     .10940
          GRADIENT     .03009    -.00409     .01425    -.00057     .00027     .00008     .05604    -.02116    -.02122    -.00042
```

```
DATE 05 NOV 73          TABULATED DATA FOR CAL T14-053 (IA36)                                                      PAGE  [illegible]6

                                  CALSPAN T14-053     02 T1 S1     IA36                               (AUF072)   ( 26 SEP 73  )

           REFERENCE DATA                                                                               PARAMETRIC DATA

SREF  =  2690.0004 FT.SQU   XMRP  =   953.0001 INCHES                                  ALPHA  =       .000   MPSRA  =   150.000
LREF  =  1328.0002 INCHES   YMRP  =      .0000 INCHES                                  POWER  =       .000   RUDDER =      .000
BREF  =  1328.0002 INCHES   ZMRP  =   400.0000 INCHES
SCALE =       .0190

                          RUN NO.   72/ 0    RN/L =   2.74    GRADIENT INTERVAL =  -5.00/  5.00

   MACH       BETA       CNW        CHW        CBW        CHR        CHEI       CHEO        CN        CLMF        CLM        CAF
   .904     -6.080     .22880    -.03860     .10180    -.00120     .06700     .01610     .00470    -.03840    -.03490     .11465
   .901     -3.050     .20140    -.02570     .09050     .01490     .05760     .01160     .00960    -.03860    -.03540     .11962
   .904       .000     .15080    -.00960     .07170     .01970     .03900     .00370     .00970    -.03610    -.03240     .11997
   .902      3.050     .11020     .00540     .05860     .02120     .02060    -.00010     .00730    -.03890    -.03470     .11937
   .902      6.090     .06160     .02030     .04060     .04780     .00780    -.00050    -.00940    -.02940    -.02480     .10705
          GRADIENT    -.01495     .00510    -.00523     .00103    -.00607    -.00192    -.00038    -.00005     .00011    -.00005

                                  CALSPAN T14-053     02 T1 S1     IA36                               (AUF073)   ( 26 SEP 73  )

           REFERENCE DATA                                                                               PARAMETRIC DATA

SREF  =  2690.0004 FT.SQU   XMRP  =   953.0001 INCHES                                  BETA   =       .000   MPSRA  =   150.000
LREF  =  1328.0002 INCHES   YMRP  =      .0000 INCHES                                  POWER  =      1.000   OPR    =    28.310
BREF  =  1328.0002 INCHES   ZMRP  =   400.0000 INCHES                                  SRMPR  =      2.020   RUDDER =      .000
SCALE =       .0190

                          RUN NO.   73/ 0    RN/L =   2.67    GRADIENT INTERVAL =  -5.00/  5.00

   MACH      ALPHA       CNW        CHW        CBW        CHR        CHEI       CHEO        CN        CLMF        CLM        CAF
   .902     -8.010    -.14230     .01160    -.06420     .02570     .05770     .03520    -.47020     .15640     .16250     .11767
   .902     -4.040    -.00190     .00230     .00550     .02310     .04840     .02380    -.22370     .05830     .06390     .12925
   .900       .000     .13210    -.01000     .07170     .02300     .04350     .01350     .02160    -.04500    -.03990     .13129
   .905      4.040     .24800    -.03040     .12510     .  220     .05000     .02800     .24190    -.12350    -.11870     .13344
   .902      6.020     .28410    -.04040     .13550     .02270     .05150     .02320     .34020    -.15300    -.14790     .12571
          GRADIENT     .03093    -.00405     .01480    -.00011     .00020     .00052     .05762    -.02250    -.02260     .00052
```

```
                               CALSPAN T14-053     02 T1 S1     IA36                    (AUF074)   ( 26 SEP 73  )

              REFERENCE DATA                                                                 PARAMETRIC DATA

SREF  =  2690.0004 FT.SQU   XMRP  =   953.0001 INCHES                         ALPHA  =      .000   MPSHA   =   150.000
LREF  =  1328.0002 INCHES   YMRP  =      .0000 INCHES                         POWER  =     1.000   OPR     =    28.310
BREF  =  1328.0002 INCHES   ZMRP  =   400.0000 INCHES                         SRMPR  =     2.020   RUDDER  =      .000
SCALE =       .0190

                        RUN NO.   74/ 0    RN/L =   2.69    GRADIENT INTERVAL =  -5.00/  5.00

  MACH      BETA       CNW        CHW        CBW        CHR        CHEI       CHEO        CN        CLMF        CLM        CAF
  .902     -6.080    .21410    -.04080     .10050     .00720     .07460     .03220    -.00120    -.03230    -.02740     .13188
  .900     -3.050    .18670    -.02690     .09130     .02310     .06390     .02480     .00940    -.03690    -.03200     .13193
  .899       .000    .13330    -.00970     .07200     .02430     .04370     .01510     .01560    -.04000    -.03480     .13271
  .899      3.050    .10440     .00590     .06000     .03190     .02270     .01160     .00920    -.03840    -.03270     .13438
  .901      6.090    .04210     .02100     .03850     .06090     .01120     .00910    -.01110    -.02750    -.02140     .12641
         GRADIENT   -.01349     .00538    -.00513     .00144    -.00675    -.00216    -.00003    -.00025    -.00011     .00040

                               CALSPAN T14-053     02 T1 S1     IA36                    (AUF075)   ( 26 SEP 73  )

              REFERENCE DATA                                                                 PARAMETRIC DATA

SREF  =  2690.0004 FT.SQU   XMRP  =   953.0001 INCHES                         BETA   =      .000   MPSRA   =   150.000
LREF  =  1328.0002 INCHES   YMRP  =      .0000 INCHES                         POWER  =      .000   RUDDER  =      .000
BREF  =  1328.0002 INCHES   ZMRP  =   400.0000 INCHES
SCALE =       .0190

                        RUN NO.   75/ 0    RN/L =   2.11    GRADIENT INTERVAL =  -5.00/  5.00

  MACH      ALPHA      CNW        CHW        CBW        CHR        CHEI       CHEO        CN        CLMF        CLM        CAF
 1.200     -8.110   -.19090    -.00260    -.08070     .04280     .11480     .05270    -.53310     .20270     .20850     .25665
 1.203     -4.020   -.02010    -.00610     .00300     .04250     .09720     .04700    -.24630     .08990     .09570     .25863
 1.205       .010    .13610    -.01070     .08350     .04000     .08320     .02880     .01040    -.01870    -.01260     .26002
 1.207      3.960    .25450    -.01190     .14520     .03920     .06980     .00150     .24300    -.10720    -.10120     .25950
 1.203      6.010    .32160    -.01470     .17690     .03700     .06020    -.01040     .36300    -.15400    -.14790     .25947
         GRADIENT    .03443    -.00073     .01783    -.00041    -.00343    -.00570     .05132    -.02471    -.02468     .00011
```

```
                                      CALSPAN T14-053     02 T1 S1     IA36                          (AUF076)   ( 26 SEP 73  )

                 REFERENCE DATA                                                                             PARAMETRIC DATA

SREF  =  2690.0004 FT.SQU   XMRP  =   953.0001 INCHES                                       ALPHA  =       .000   MPSRA  =   150.000
LREF  =  1328.0002 INCHES   YMRP  =      .0000 INCHES                                       POWER  =       .000   RUDDER =      .000
BREF  =  1328.0002 INCHES   ZMRP  =   400.0000 INCHES
SCALE =      .0190

                            RUN NO.   76/ 0    RN/L =   2.08    GRADIENT INTERVAL =  -5.00/  5.00

  MACH       BETA       CNW        CHW        CBW        CHR        CHEI       CHEO       CN         CLMF       CLM        CAF
  1.207     -6.080     .26020    -.02110     .13630     .00100     .10290     .01040    -.00900    -.01430    -.00810     .25931
  1.204     -3.050     .21920    -.01530     .11100     .01620     .09270     .02200    -.00230    -.01490    -.00890     .25459
  1.204       .000     .14980    -.01090     .08350     .04190     .08380     .03160     .01250    -.01950    -.01370     .25578
  1.206      3.050     .03440    -.00480     .03860     .07160     .05720     .03940    -.00760    -.01130    -.00540     .25846
  1.206      6.080    -.03790    -.00030     .00790     .10340     .03730     .04770    -.01140    -.01180    -.00580     .25566
          GRADIENT    -.03030     .00172    -.01187     .00908    -.00582     .00285    -.00087     .00059     .00057     .00063

                                      CALSPAN T14-053     02 T1 S1     IA36                          (AUF077)   ( 26 SEP 73  )

                 REFERENCE DATA                                                                             PARAMETRIC DATA

SREF  =  2690.0004 FT.SQU   XMRP  =   953.0001 INCHES                                       BETA   =       .000   MPSRA  =   150.000
LREF  =  1328.0002 INCHES   YMRP  =      .0000 INCHES                                       POWER  =      1.000   OPR    =    36.200
BREF  =  1328.0002 INCHES   ZMRP  =   400.0000 INCHES                                       SRMPR  =      2.330   RUDDER =      .000
SCALE =      .0190

                            RUN NO.   77/ 0    RN/L =   2.02    GRADIENT INTERVAL =  -5.00/  5.00

  MACH      ALPHA       CNW        CHW        CBW        CHR        CHEI       CHEO       CN         CLMF       CLM        CAF
  1.205     -8.040    -.19050    -.00130    -.08090     .04420     .10980     .05940    -.52390     .20190     .20750     .24942
  1.206     -4.010    -.01730    -.00470     .00320     .04330     .09260     .05440    -.24060     .08600     .09130     .25718
  1.201       .020     .14530    -.00980     .08570     .04130     .07790     .03590     .01660    -.02390    -.01840     .26003
  1.193      4.050     .27790    -.01490     .15650     .03590     .06320     .00450     .25200    -.11520    -.10930     .25297
  1.202      6.050     .33000    -.01380     .18030     .03210     .05260    -.01210     .35660    -.15280    -.14680     .25319
          GRADIENT     .03663    -.00127     .01902    -.00092    -.00365    -.00619     .06112    -.02496    -.02489    -.00052
```

```
                                         CALSPAN T14-053     02 T1 S1     IA36                        (AUF078)   ( 26 SEP 73  )

               REFERENCE DATA                                                                        PARAMETRIC DATA

SREF  =  2690.0004 FT.SOU   XMRP  =   953.0001 INCHES                                  ALPHA  =       .000   MPSRA  =   150.000
LREF  =  1328.0002 INCHES   YMRP  =      .0000 INCHES                                  POWER  =      1.000   OPR    =    35.200
BREF  =  1328.0002 INCHES   ZMRP  =   400.0000 INCHES                                  SRMPR  =      2.330   RUDDER =      .000
SCALE =      .0190

                              RUN NO.   78/ 0    RN/L =   2.05    GRADIENT INTERVAL =  -5.00/  5.00

  MACH       BETA        CNW        CHW        CBW        CHR        CHEI       CHEO        CN        CLMF        CLM         CAF
  1.175     -6.080     .28140    -.02060     .13960     .01160     .10170     .01160    -.00100    -.01970    -.01390     .25564
  1.193     -3.040     .21820    -.01530     .11370     .03200     .08980     .02500     .00570    -.02190    -.01530     .24959
  1.206       .000     .14870    -.00940     .08760     .03950     .08000     .03000     .01460    -.02200    -.01650     .26712
  1.197      3.050     .02450    -.00370     .03890     .05150     .04620     .03880    -.00030    -.01760    -.01180     .25061
  1.197      6.080    -.03840     .00190     .00950     .09010     .02580     .04480    -.01110    -.01170    -.00610     .24538
          GRADIENT    -.03181     .00190    -.01228     .00320    -.00716     .00227    -.00099     .00071     .00058     .00016

                                         CALSPAN T14-053     01 T1 S1     IA36                        (AUF081)   ( 26 SEP 73  )

               REFERENCE DATA                                                                        PARAMETRIC DATA

SREF  =  2690.0004 FT.SOU   XMRP  =   953.0001 INCHES                                  BETA   =       .000   MPSRA  =      .000
LREF  =  1328.0002 INCHES   YMRP  =      .0000 INCHES                                  POWER  =       .000   RUDDER =      .000
BREF  =  1328.0002 INCHES   ZMRP  =   400.0000 INCHES
SCALE =      .0190

                              RUN NO.   81/ 0    RN/L =   2.16    GRADIENT INTERVAL =  -5.00/  5.00

  MACH      ALPHA        CNW        CHW        CBW        CHR        CHEI       CHEO        CN        CLMF        CLM         CAF
  1.203     -8.110    -.17670    -.00250    -.07880    -.00100     .11270     .03940    -.52460     .19890     .20450     .23983
  1.197     -4.070    -.00800    -.00640     .00420    -.00080     .09440     .03410    -.24830     .09030     .09600     .24670
  1.203       .050     .14400    -.01110     .08410     .00000     .08010     .01470     .00880    -.01730    -.01160     .25227
  1.200      4.020     .25680    -.01230     .14480     .00050     .06360    -.01170     .24320    -.10710    -.10140     .24586
  1.197      6.000     .31960    -.01560     .17390     .00050     .05480    -.02220     .35920    -.15240    -.14660     .24259
          GRADIENT     .03276    -.00073     .01739     .00016    -.00381    -.00566     .06076    -.02441    -.02441    -.00009
```

```
DATE 05 NOV 75          TABULATED DATA FOR CAL T14-053 (IA36)                                                    PAGE   90

                                        CALSPAN T14-053     01 T1 S1      IA36                  (AUF082)   ( 26 SEP 73  )

                REFERENCE DATA                                                                   PARAMETRIC DATA

SREF  =  2690.0004 FT.SQU   XMRP  =   953.0001 INCHES                          ALPHA  =      .000  MPSRA  =      .000
LREF  =  1328.0002 INCHES   YMRP  =      .0000 INCHES                          POWER  =      .000  RUDDER =      .000
BREF  =  1328.0002 INCHES   ZMRP  =   400.0000 INCHES
SCALE =      .0190

                          RUN NO.   92/ 0    RN/L =   2.13    GRADIENT INTERVAL =  -5.00/  5.00

  MACH        BETA       CNW        CHW        CBW        CHR        CHEI       CHEO        CN        CLMF        CLM        CAF
  1.202      -6.080     .27290    -.02240     .13460    -.02900     .09790    -.00020    -.01180    -.01190    -.00600     .23876
  1.202      -3.050     .21530    -.01610     .11060    -.01530     .08900     .01040    -.00270    -.01390    -.00800     .24314
  1.202        .000     .14970    -.01140     .08320     .00170     .08100     .01950     .00900    -.01790    -.01220     .25135
  1.200       3.050     .03220    -.00570     .03730     .01850     .05600     .02730    -.00760    -.01190    -.00580     .23890
  1.201       6.080    -.03990    -.00090     .00750     .03140     .03660     .03600    -.01270    -.01350    -.00760     .23384
            GRADIENT    -.03002     .00170    -.01202     .00557    -.00541     .00277    -.00080     .00033     .00036    -.00071

                                        CALSPAN T14-053     01 T1 S1      IA36                  (AUF083)   ( 26 SEP 73  )

                REFERENCE DATA                                                                   PARAMETRIC DATA

SREF  =  2690.0004 FT.SQU   XMRP  =   953.0001 INCHES                          BETA   =      .000  MPSRA  =      .000
LREF  =  1328.0002 INCHES   YMRP  =      .0000 INCHES                          POWER  =     1.000  OPR    =    36.200
BREF  =  1328.0002 INCHES   ZMRP  =   400.0000 INCHES                          SRMPR  =     2.330  RUDDER =      .000
SCALE =      .0190

                          RUN NO.   83/ 0    RN/L =   2.09    GRADIENT INTERVAL =  -5.00/  5.00

  MACH       ALPHA       CNW        CHW        CBW        CHR        CHEI       CHEO        CN        CLMF        CLM        CAF
  1.199      -8.090    -.18050    -.00070    -.07920     .00090     .09900     .04860    -.50700     .18730     .19290     .24346
  1.194      -4.050    -.02090    -.00400     .00230     .00110     .08100     .04280    -.22990     .07750     .08290     .25372
  1.198       -.050     .14710    -.00930     .08550     .00250     .07270     .02590     .01660    -.02490    -.01940     .25828
  1.194       3.990     .26180    -.01100     .14760     .00410     .05640    -.00030     .24610    -.11020    -.10460     .25156
  1.197       6.060     .32860    -.01380     .17960     .00290     .04790    -.01680     .36490    -.15790    -.15240     .24970
            GRADIENT     .03515    -.00087     .01807     .00037    -.00306    -.00536     .05920    -.02334    -.02332    -.00027
```

```
                                      CALSPAN T14-053     01 T1 S1     IA36                        (AUF084)    ( 26 SEP 73  )

               REFERENCE DATA                                                                  PARAMETRIC DATA

SREF  =  2690.0004 FT.SQU   XMRP  =   953.0001 INCHES                          ALPHA  =      .000   MPSRA  =      .000
LREF  =  1328.0002 INCHES   YMRP  =      .0000 INCHES                          POWER  =     1.000   OPR    =    36.200
BREF  =  1328.0002 INCHES   ZMRP  =   400.0000 INCHES                          SRMPR  =     2.330   RUDDER =      .000
SCALE =      .0190

                              RUN NO.   84/ 0    RN/L =   2.11    GRADIENT INTERVAL =  -5.00/  5.00

  MACH      BETA       CNW        CHW        CBW        CHR        CHEI       CHEO        CN         CLMF       CLM        CAF
  1.193    -6.070     .27660    -.02070     .13800    -.02970     .09360     .00760    -.00100    -.02320    -.01720     .24010
  1.198    -3.050     .21720    -.01410     .11490    -.01450     .08470     .02040     .00990    -.02530    -.01950     .25249
  1.196      .000     .14850    -.00930     .08560     .00620     .07310     .03060     .01800    -.02670    -.02110     .25767
  1.198     3.050     .02850    -.00330     .03960     .02170     .04070     .03510    -.00080    -.01880    -.01310     .24749
  1.197     6.070    -.02930     .00220     .01160     .03270     .02010     .03870    -.00310    -.02190    -.01640     .24376
          GRADIENT    -.03093     .00177    -.01234     .00593    -.00721     .00241    -.00175     .00107     .00105    -.00082

                                      CALSPAN T14-053     01 T1 S1   OPR = 2.65 X NOM              (AUF085)    ( 26 SEP 73  )

               REFERENCE DATA                                                                  PARAMETRIC DATA

SREF  =  2690.0004 FT.SQU   XMRP  =   953.0001 INCHES                          BETA   =      .000   MPSRA  =      .000
LREF  =  1328.0002 INCHES   YMRP  =      .0000 INCHES                          POWER  =     1.000   OPR    =    95.800
BREF  =  1328.0002 INCHES   ZMRP  =   400.0000 INCHES                          SRMPR  =     2.330   RUDDER =      .000
SCALE =      .0190

                              RUN NO.   85/ 0    RN/L =   2.06    GRADIENT INTERVAL =  -5.00/  5.00

  MACH      ALPHA      CNW        CHW        CBW        CHR        CHEI       CHEO        CN         CLMF       CLM        CAF
  1.194    -8.070    -.18370     .00020    -.08000    -.00130     .09030     .04930    -.49900     .17370     .17800     .23606
  1.192    -4.090    -.01580    -.00330     .00160     .00300     .07480     .04850    -.22950     .07330     .07770     .24622
  1.193     -.060     .14140    -.00880     .08540     .00340     .06530     .02970     .02060    -.03030    -.02580     .25310
  1.196     5.970     .33510    -.01270     .18050     .00540     .04090    -.01070     .36360    -.16070    -.15630     .24776
          GRADIENT     .03901    -.00136     .02079     .00010    -.00236    -.00467     .06206    -.02571    -.02568     .00171
```

```
                                 CALSPAN T14-053     01 T1 S1  OPR = 1.84 X NOM                  (AUF086)   ( 26 SEP 73  )

          REFERENCE DATA                                                                        PARAMETRIC DATA

SREF  =  2690.0004 FT.SQU    XMRP  =   953.0001 INCHES                              BETA    =       .000  MPSRA   =       .000
LREF  =  1328.0002 INCHES    YMRP  =      .0000 INCHES                              POWER   =      1.000  OPR     =     66.700
BREF  =  1328.0002 INCHES    ZMRP  =   400.0000 INCHES                              SRMPR   =      2.330  RUDDER  =       .000
SCALE =      .0190

                         RUN NO.   86/ 0    RN/L =    2.01    GRADIENT INTERVAL =  -5.00/  5.00

   MACH      ALPHA       CNW         CHW         CBW         CHR         CHEI        CHEO        CN          CLMF        CLM         CAF
   1.189     -8.120     -.18200     -.00020     -.08160      .01020      .09790      .06400     -.50770      .18130      .18670      .23568
   1.191     -4.090     -.00970     -.00410      .00390      .00930      .08230      .05560     -.23110      .07820      .08340      .25062
   1.196      -.070      .14580     -.00920      .08660      .00670      .06990      .02920      .01700     -.02470     -.01940      .25958
   1.197      3.980      .28950     -.01360      .15850      .00700      .05750      .00270      .25470     -.11590     -.11020      .25451
   1.198      6.060      .34180     -.01310      .18130      .00750      .04470     -.01100      .36370     -.15780     -.15230      .25265
           GRADIENT      .03707     -.00118      .01916     -.00028     -.00307     -.00656      .06020     -.02405     -.02399      .00048

                                 CALSPAN T14-053     01 T1 S1  SRMPR=1.36 X NOM                  (AUF087)   ( 26 SEP 73  )

          REFERENCE DATA                                                                        PARAMETRIC DATA

SREF  =  2690.0004 FT.SQU    XMRP  =   953.0001 INCHES                              BETA    =       .000  MPSRA   =       .000
LREF  =  1328.0002 INCHES    YMRP  =      .0000 INCHES                              POWER   =      1.000  OPR     =     36.200
BREF  =  1328.0002 INCHES    ZMRP  =   400.0000 INCHES                              SRMPR   =      2.330  RUDDER  =       .000
SCALE =      .0190

                         RUN NO.   87/ 0    RN/L =    2.06    GRADIENT INTERVAL =  -5.00/  5.00

   MACH      ALPHA       CNW         CHW         CBW         CHR         CHEI        CHEO        CN          CLMF        CLM         CAF
   1.198     -7.930     -.17910      .00130     -.07750      .01090      .08610      .05950     -.48640      .16760      .17230      .24259
   1.199     -3.880     -.00120     -.00310      .01050      .00860      .07100      .05050     -.21410      .06650      .07090      .25339
   1.195       .170      .15890     -.00820      .09070      .00990      .06020      .03280      .03260     -.03600     -.03180      .25577
   1.198      4.230      .26840     -.00930      .15120      .00780      .04120     -.00030      .25630     -.12090     -.11660      .25102
   1.196      6.130      .34090     -.01210      .18180      .00700      .03360     -.01230      .36610     -.16200     -.15770      .24822
           GRADIENT      .03324     -.00076      .01735     -.00010     -.00367     -.00626      .05800     -.02311     -.02312     -.00029
```

CALSPAN T14-053 01 T1 S1 IA36 (AUF088) (26 SEP 73)

REFERENCE DATA

SREF = 2690.0004 FT.SQU XMRP = 953.0001 INCHES
LREF = 1328.0002 INCHES YMRP = .0000 INCHES
BREF = 1328.0002 INCHES ZMRP = 400.0000 INCHES
SCALE = .0190

PARAMETRIC DATA

BETA = .000 MPSRA = .000
POWER = .000 RUDDER = .000

RUN NO. 88/ 0 RN/L = 2.80 GRADIENT INTERVAL = -5.00/ 5.00

MACH	ALPHA	CNW	CHW	CBW	CHR	CHEI	CHEO	CN	CLMF	CLM	CAF
.898	-8.070	-.13040	.01130	-.05870	.00970	.05700	.04120	-.46830	.15070	.15510	.10410
.901	-4.050	.00030	.00490	.00950	.00930	.04320	.03350	-.21810	.05120	.05520	.11980
.899	-.030	.12970	-.00780	.07580	.01070	.03970	.02350	.01820	-.04510	-.04130	.11641
.899	4.000	.24160	-.02950	.12580	.01110	.04800	.03650	.23230	-.11830	-.11500	.11233
.901	5.970	.27540	-.03980	.13440	.01170	.05030	.03440	.32360	-.14540	-.14190	.10663
	GRADIENT	.02997	-.00427	.01445	.00022	.00060	.00037	.05595	-.02105	-.02114	-.00093

CALSPAN T14-053 01 T1 S1 IA36 (AUF089) (26 SEP 73)

REFERENCE DATA

SREF = 2690.0004 FT.SQU XMRP = 953.0001 INCHES
LREF = 1328.0002 INCHES YMRP = .0000 INCHES
BREF = 1328.0002 INCHES ZMRP = 400.0000 INCHES
SCALE = .0190

PARAMETRIC DATA

ALPHA = .000 MPSRA = .000
POWER = .000 RUDDER = .000

RUN NO. 89/ 0 RN/L = 2.78 GRADIENT INTERVAL = -5.00/ 5.00

MACH	BETA	CNW	CHW	CBW	CHR	CHEI	CHEO	CN	CLMF	CLM	CAF
.902	-6.080	.22150	-.03840	.10490	.00670	.07170	.03900	.00110	-.03790	-.03400	.11480
.899	-3.050	.19540	-.02500	.09590	.01980	.06110	.03440	.01320	-.04390	-.04020	.11173
.905	.000	.14480	-.00720	.07690	.01290	.03830	.02690	.01730	-.04450	-.04070	.11769
.901	3.050	.09980	.00620	.06180	.00000	.02240	.02340	.01380	-.04550	-.04150	.11698
.901	6.090	.04560	.02050	.04240	.02010	.01070	.02260	-.00270	-.03440	-.02980	.11273
	GRADIENT	-.01567	.00511	-.00559	-.00325	-.00634	-.00180	.00010	-.00026	-.00021	.00086

```
                                        CALSPAN T14-053     01 T1 S1     IA36                              (AUF090)   ( 26 SEP 73  )

                REFERENCE DATA                                                                                   PARAMETRIC DATA

SREF  =  2690.0004 FT.SQU   XMRP  =   953.0001 INCHES                                          BETA    =      .000   MPSRA  =      .000
LREF  =  1328.0002 INCHES   YMRP  =      .0000 INCHES                                          POWER   =     1.000   OPR    =    28.310
BREF  =  1328.0002 INCHES   ZMRP  =   400.0000 INCHES                                          SRMPR   =     2.020   RUDDER =      .000
SCALE =       .0190

                              RUN NO.   90/ 0    RN/L =   2.69    GRADIENT INTERVAL =  -5.00/  5.00

  MACH       ALPHA       CNW        CHW        CBW        CHR        CHE1       CHEO        CN         CLMF       CLM        CAF
  .898      -3.990     -.00470     .00370     .00710     .01610     .04850     .04400    -.21020     .04800     .05320     .13194
  .899        .100      .13260    -.00800     .07630     .01280     .04070     .02570     .02370    -.04540    -.04040     .13455
  .897       4.030      .24180    -.02990     .12740     .01400     .04990     .04020     .24450    -.12760    -.12250     .12220
  .901       5.980      .27440    -.04000     .13630     .01510     .05240     .03820     .33680    -.15440    -.14940     .12590
          GRADIENT      .03075    -.00418     .01501    -.00027     .00016    -.00050     .05670    -.02190    -.02191    -.00120

                                        CALSPAN T14-053     01 T1 S1     IA36                              (AUF091)   ( 26 SEP 73  )

                REFERENCE DATA                                                                                   PARAMETRIC DATA

SREF  =  2690.0004 FT.SQU   XMRP  =   953.0001 INCHES                                          ALPHA   =      .000   MPSRA  =      .000
LREF  =  1328.0002 INCHES   YMRP  =      .0000 INCHES                                          POWER   =     1.000   OPR    =    28.310
BREF  =  1328.0002 INCHES   ZMRP  =   400.0000 INCHES                                          SRMPR   =     2.020   RUDDER =      .000
SCALE =       .0190

                              RUN NO.   91/ 0    RN/L =   2.68    GRADIENT INTERVAL =  -5.00/  5.00

  MACH       BETA        CNW        CHW        CBW        CHR        CHE1       CHEO        CN         CLMF       CLM        CAF
  .897      -6.080      .21650    -.04080     .10320     .01420     .07430     .04550     .01200    -.04420    -.03890     .12151
  .899      -3.050      .19070    -.02550     .09520     .02580     .06410     .03670     .02240    -.04970    -.04500     .13353
  .899        .000      .13790    -.00800     .07750     .01370     .04010     .02660     .02520    -.04820    -.04330     .13684
  .898       3.050      .10610     .00620     .06350    -.00500     .02130     .02500     .02260    -.04930    -.04390     .12902
  .899       6.080      .04490     .02110     .04300     .01660     .00920     .02430     .00620    -.04090    -.03440     .12342
          GRADIENT     -.01387     .00520    -.00520    -.00505    -.00702    -.00192     .00003     .00007     .00018    -.00074
```

```
                               CALSPAN T14-053     01 T1 S1   OPR = 2.5 X NOM                 (AUF092)   ( 26 SEP 73  )

            REFERENCE DATA                                                                   PARAMETRIC DATA

SREF  =  2690.0004 FT.SQU   XMRP  =   953.0001 INCHES                          BETA   =      .000   MPSRA  =     .000
LREF  =  1328.0002 INCHES   YMRP  =      .0000 INCHES                          POWER  =     1.000   OPR    =   70.500
BREF  =  1328.0002 INCHES   ZMRP  =   400.0000 INCHES                          SRMPR  =     2.020   RUDDER =     .000
SCALE =      .0190

                      RUN NO.   92/ 0    RN/L =   2.70    GRADIENT INTERVAL =  -5.00/  5.00

  MACH     ALPHA      CNW        CHW        CBW        CHR        CHEI       CHEO       CN         CLMF       CLM        CAF
  .900     -8.140   -.13470     .01430    -.06240     .00370     .05370     .02880    -.45230     .14090     .14730     .12455
  .897     -4.020    .00490     .00410     .00810     .00660     .04410     .02670    -.20510     .04180     .04800     .13410
  .903       .020    .14900    -.00660     .07820     .00540     .03450     .01440     .03040    -.05380    -.04810     .14053
  .899      4.020    .25280    -.02910     .12710     .00380     .04660     .02620     .24580    -.12960    -.12390     .13861
  .898      6.010    .22570    -.04020     .13860     .00160     .05060     .01760     .33930    -.15730    -.15150     .13361
          GRADIENT   .03084    -.00413     .01481    -.00035     .00031    -.00007     .05621    -.02132    -.02138     .00069

                               CALSPAN T14-053     01 T1 S1   OPR = 1.72 X NOM                (AUF093)   ( 26 SEP 73  )

            REFERENCE DATA                                                                   PARAMETRIC DATA

SREF  =  2690.0004 FT.SQU   XMRP  =   953.0001 INCHES                          BETA   =      .000   MPSRA  =     .000
LREF  =  1328.0002 INCHES   YMRP  =      .0000 INCHES                          POWER  =     1.000   OPR    =   48.600
BREF  =  1328.0002 INCHES   ZMRP  =   400.0000 INCHES                          SRMPR  =     2.020   RUDDER =     .000
SCALE =      .0190

                      RUN NO.   93/ 0    RN/L =   2.70    GRADIENT INTERVAL =  -5.00/  5.00

  MACH     ALPHA      CNW        CHW        CBW        CHR        CHEI       CHEO       CN         CLMF       CLM        CAF
  .898     -8.100   -.13230     .01320    -.05950     .00250     .05410     .03100    -.45690     .14330     .14940     .11839
  .900     -3.990    .00900     .00470     .00960     .00710     .04350     .02810    -.20930     .04790     .05350     .13380
  .899       .060    .14900    -.00820     .07850     .00590     .03920     .01620     .03150    -.05450    -.04920     .13497
  .904      4.060    .25770    -.02850     .12700     .00510     .04520     .03100     .24980    -.13140    -.12550     .14054
  .898      6.010    .29270    -.04030     .13840     .00570     .05130     .02490     .34130    -.15760    -.15230     .12723
          GRADIENT   .03090    -.00412     .01459    -.00025     .00021     .00035     .05704    -.02228    -.02237     .00084
```

```
                                                                                                      PAGE   96
DATE 05 NOV 75            TABULATED DATA FOR CAL T14-053 (IA36)

                                    CALSPAN T14-053     01 T1 S1   SRMPA = 1.2 X NOM              (AUF094)   ( 26 SEP 73  )

               REFERENCE DATA                                                                        PARAMETRIC DATA

SREF  =  2690.0004 FT.SQU   XMRP  =    953.0001 INCHES                                    BETA    =      .000   MPSRA   =      .000
LREF  =  1328.0002 INCHES   YMRP  =       .0000 INCHES                                    POWER   =     1.000   OPR     =    28.310
BREF  =  1328.0002 INCHES   ZMRP  =    400.0000 INCHES                                    SRMPR   =     2.400   RUDDER  =      .000
SCALE =      .0190

                            RUN NO    94/ 0    RN/L =    2.68    GRADIENT INTERVAL =  -5.00/  5.00

  MACH       ALPHA      CNW        CHW        CBW        CHR        CHEI       CHEO       CN         CLMF       CLM        CAF
   .896     -7.970    -.13170     .01180    -.06040     .00520     .05420     .03660    -.44730     .13790     .14280     .11797
   .894     -3.980     .00490     .00070     .03560     .00770     .04840     .03320    -.20770     .04840     .05320     .12505
   .901       .120     .14850    -.00890     .07780     .00720     .03890     .01680     .03070    -.05290    -.04850     .13507
   .905      4.090     .26360    -.02930     .12840     .00710     .04520     .02890     .24730    -.12920    -.12520     .13776
   .897      6.070     .29580    -.03990     .13660     .00780     .04630     .02100     .33720    -.15460    -.14930     .11651
          GRADIENT     .03207    -.00371     .01523    -.00007    -.00041    -.00055     .05639    -.02202    -.02212     .00158

                                    CALSPAN T14-053     01 T1 S1     IA36                         (AUF095)   ( 26 SEP 73  )

               REFERENCE DATA                                                                        PARAMETRIC DATA

SREF  =  2690.0004 FT.SQU   XMRP  =    953.0001 INCHES                                    BETA    =      .000   MPSRA   =      .000
LREF  =  1328.0002 INCHES   YMRP  =       .0000 INCHES                                    POWER   =      .000   RUDDER  =    10.000
BREF  =  1328.0002 INCHES   ZMRP  =    400.0000 INCHES
SCALE =      .0190

                            RUN NO.   95/ 0    RN/L =    2.15    GRADIENT INTERVAL =  -5.00/  5.00

  MACH       ALPHA      CNW        CHW        CBW        CHR        CHEI       CHEO       CN         CLMF       CLM        CAF
  1.203     -8.100    -.17130    -.00270    -.07860    -.10620     .11830     .03900    -.52640     .20050     .20610     .24522
  1.202     -4.040    -.00500    -.00590     .00370    -.10190     .09970     .03270    -.24520     .09050     .09610     .25680
  1.206      -.020     .14880    -.01020     .08320    -.09630     .08500     .01360     .00910    -.01580    -.01030     .25184
  1.204      3.990     .26110    -.01130     .14440    -.09050     .06950    -.01370     .24460    -.10570    -.10010     .25619
  1.202      6.030     .32730    -.01470     .17530    -.08850     .05960    -.02520     .36280    -.15200    -.14630     .25272
          GRADIENT     .03314    -.00067     .01752     .00142    -.00376    -.00578     .06100    -.02443    -.02443    -.00308
```

```
                              CALSPAN T14-053     01 T1 S1     IA36                     (AUF096)   ( 26 SEP 73  )

        REFERENCE DATA                                                                   PARAMETRIC DATA

SREF  =  2690.0004 FT.SQU    XMRP  =    953.0001 INCHES                          ALPHA  =       .000   MPSRA  =       .000
LREF  =  1328.0002 INCHES    YMRP  =       .0000 INCHES                          POWER  =       .000   RUDDER =     10.000
BREF  =  1328.0002 INCHES    ZMRP  =    400.0000 INCHES
SCALE =       .0190

                          RUN NO.   96/ 0    RN/L =   2.12    GRADIENT INTERVAL =  -5.00/  5.00

   MACH      BETA       CNW        CHW        CBW        CHR        CHEI       CHEO       CN         CLMF       CLM        CAF
   1.200    -6.080     .28440    -.02120     .13420    -.13960     .10570    -.00400    -.01360    -.00940    -.00350     .24669
   1.203    -3.050     .23000    -.01480     .11150    -.11930     .09350     .00570    -.00280    -.01220    -.00650     .25275
   1.199      .000     .15870    -.01040     .08350    -.09480     .08380     .01500     .01080    -.01740    -.01170     .25910
   1.203     3.050     .03740    -.00520     .03710    -.07320     .05710     .02330    -.00530    -.01110    -.00520     .24890
   1.203     6.080    -.03160    -.00050     .00850    -.04940     .03730     .03130    -.01030    -.01180    -.00600     .24288
          GRADIENT    -.03157     .00157    -.01220     .00756    -.00597     .00289    -.00041     .00018     .00021    -.00063

                              CALSPAN T14-053     01 T1 S1     IA36                     (AUF097)   ( 26 SEP 73  )

        REFERENCE DATA                                                                   PARAMETRIC DATA

SREF  =  2690.0004 FT.SQU    XMRP  =    953.0001 INCHES                          BETA   =       .000   MPSRA  =       .000
LREF  =  1328.0002 INCHES    YMRP  =       .0000 INCHES                          POWER  =      1.000   CPR    =     36.200
BREF  =  1328.0002 INCHES    ZMRP  =    400.0000 INCHES                          SRMPR  =      2.330   RUDDER =     10.000
SCALE =       .0190

                          RUN NO.   97/ 0    RN/L =   2.11    GRADIENT INTERVAL =  -5.00/  5.00

   MACH      ALPHA      CNW        CHW        CBW        CHR        CHEI       CHEO       CN         CLMF       CLM        CAF
   1.187    -7.790    -.16740    -.00050    -.07450    -.10100     .09530     .04570    -.48570     .17500     .18120     .23872
   1.205    -4.020    -.00110    -.00400     .00740    -.09820     .08450     .04110    -.23580     .08320     .08870     .25799
   1.157     4.060     .26050    -.01150     .14690    -.08960     .05500    -.00420     .25540    -.11530    -.10990     .24100
   1.190     6.010     .33150    -.01770     .17810    -.08690     .04820    -.01580     .30370    -.15570    -.15050     .23977
          GRADIENT     .03238    -.00093     .01725     .00106    -.00365    -.00561     .05079    -.02469    -.02458    -.00210
```

```
DATE 05 NOV 75          TABULATED DATA FOR CAL T14-053 (IA36)                                                          PAGE   98

                                       CALSPAN T14-053     01 T1 S1     IA36                              (AUF038)   ( 26 SEP 73  )

              REFERENCE DATA                                                                              PARAMETRIC DATA

SREF  =  2690.0004 FT.SQU   XMRP  =   953.0001 INCHES                                     ALPHA   =      .000   MPSRA   =      .000
LREF  =  1328.0002 INCHES   YMRP  =      .0000 INCHES                                     POWER   =     1.000   OPR     =    35.200
BREF  =  1328.0002 INCHES   ZMRP  =   400.0000 INCHES                                     SRMPR   =     2.330   RUDDER  =    10.000
SCALE =       .0190

                              RUN NO.   98/ 0    RN/L =   2.10    GRADIENT INTERVAL =  -5.00/  5.00

   MACH       BETA        CNW        CHW        CBW        CHR        CHEI       CHEO       CN         CLMF       CLM        CAF
   1.195     -6.070      .28520    -.01990     .13980    -.14120     .09440     .00730    -.00210    -.01950    -.01360     .24557
   1.206     -3.050      .22990    -.01290     .11640    -.11920     .08600     .01660     .00540    -.01860    -.01320     .26291
   1.202       .000      .15390    -.00950     .08750    -.09240     .07200     .01760     .02630    -.02640    -.02060     .25039
   1.203      3.050      .03750    -.00230     .03840    -.07030     .04030     .02570    -.00110    -.01430    -.00830     .24935
   1.199      6.080     -.02100     .00170     .01310    -.04920     .02390     .02980    -.01050    -.01170    -.00620     .24795
            GRADIENT     -.03154     .00164    -.01279     .00502    -.00749     .00149    -.00107     .00070     .00090    -.00212

                                       CALSPAN T14-053     01 T1 S1   OPR = 2.7 X NOM                   (AUF099)   ( 26 SEP 73  )

              REFERENCE DATA                                                                              PARAMETRIC DATA

SREF  =  2690.0004 FT.SQU   XMRP  =   953.0001 INCHES                                     ALPHA   =      .000   MPSRA   =      .000
LREF  =  1328.0002 INCHES   YMRP  =      .0000 INCHES                                     POWER   =     1.000   OPR     =    97.500
BREF  =  1328.0002 INCHES   ZMRP  =   400.0000 INCHES                                     SRMPR   =     2.330   RUDDER  =    10.000
SCALE =       .0190

                              RUN NO.   99/ 0    RN/L =   2.10    GRADIENT INTERVAL =  -5.00/  5.00

   MACH       BETA        CNW        CHW        CBW        CHR        CHEI       CHEO       CN         CLMF       CLM        CAF
   1.200     -6.080      .29150    -.01850     .14390    -.12200     .08470    -.00170     .01580    -.03440    -.03000     .24789
   1.202     -3.050      .22290    -.01230     .11510    -.09200     .07660     .01290     .00920    -.02640    -.02170     .25187
   1.198       .000      .15090    -.00820     .08510    -.06920     .06360     .01930     .01660    -.02340    -.01910     .25745
   1.200      3.050      .03970    -.00130     .04040    -.05570     .02440     .02770    -.00200    -.01780    -.01300     .24467
   1.198      6.080     -.00780     .00450     .01450    -.05070     .01150     .03030    -.00520    -.01950    -.01470     .23700
            GRADIENT     -.03002     .00180    -.01225     .00595    -.00856     .00243    -.00184     .00141     .00143    -.00118
```

```
DATE 05 NOV 75          TABULATED DATA FOR CAL T14-053 (IA36)                                                    PAGE   99

                                  CALSPAN T14-053     01 T1 S1      IA36                    (AUF100)   ( 26 SEP 73  )

            REFERENCE DATA                                                                  PARAMETRIC DATA

SREF  =  2690.0004 FT.SQU   XMRP  =    953.0001 INCHES                          BETA   =       .000   MPSRA  =      .000
LREF  =  1328.0002 INCHES   YMRP  =       .0000 INCHES                          POWER  =       .000   RUDDER =    10.000
BREF  =  1328.0002 INCHES   ZMRP  =    400.0000 INCHES
SCALE =       .0190

                         RUN NO.  100/ 0    RN/L =   2.76    GRADIENT INTERVAL =  -5.00/  5.00

  MACH      ALPHA      CNW        CHW        CBW        CHR        CHEI       CHEO       CN         CLMF       CLM        CAF
  .901     -8.100    -.12200     .01190    -.05840    -.05540     .05570     .02520    -.46930     .15210     .15620     .11049
  .900     -4.190     .00980     .00290     .00700    -.05320     .04600     .01840    -.22680     .05670     .06060     .11778
  .899       .020     .14280    -.00990     .07370    -.05220     .04070     .00830     .01850    -.04340    -.03950     .11570
  .903      3.980     .25200    -.03010     .12330    -.05180     .04740     .02050     .23030    -.11660    -.11310     .11810
  .899      6.010     .29230    -.03960     .13580    -.05180     .04820     .01540     .32720    -.14480    -.14130     .11195
          GRADIENT    .32967    -.00403     .01425     .00017     .00016     .00023     .05597    -.02124    -.02129     .00003

                                  CALSPAN T14-053     01 T1 S1      IA36                    (AUF101)   ( 26 SEP 73  )

            REFERENCE DATA                                                                  PARAMETRIC DATA

SREF  =  2690.0004 FT.SQU   XMRP  =    953.0001 INCHES                          ALPHA  =       .000   MPSRA  =      .000
LREF  =  1328.0002 INCHES   YMRP  =       .0000 INCHES                          POWER  =       .000   RUDDER =    10.000
BREF  =  1328.0002 INCHES   ZMRP  =    400.0000 INCHES
SCALE =       .0190

                         RUN NO.  101/ 0    RN/L =   2.75    GRADIENT INTERVAL =  -5.00/  5.00

  MACH      BETA       CNW        CHW        CBW        CHR        CHEI       CHEO       CN         CLMF       CLM        CAF
  .900     -6.080     .22910    -.03980     .10200    -.08010     .07080     .02260     .00040    -.03490    -.03090     .11684
  .901     -3.050     .20740    -.02450     .09430    -.06760     .05960     .01630     .01340    -.04160    -.03800     .12048
  .903       .000     .15810    -.00750     .07650    -.05230     .03580     .00890     .01830    -.04350    -.03990     .12528
  .902      3.050     .11180     .00460     .05810    -.05410     .02210     .00630     .01200    -.04190    -.03800     .12006
  .903      6.090     .05830     .01920     .04020    -.05160     .01020     .00550    -.00220    -.03330    -.02910     .11719
          GRADIENT   -.01567     .00477    -.00593     .00221    -.00615    -.00164    -.00023     .00005     .00000    -.00007
```

```
DATE 05 NOV 73            TABULATED DATA FOR CAL T14-053 (IA36)                                                          PAGE  100

                                       CALSPAN T14-053      01 T1 S1      IA36                                (AUF102)   ( 26 SEP 73  )

                 REFERENCE DATA                                                                                PARAMETRIC DATA

SREF  =  2690.0004 FT.SQU   XMRP  =   953.0001 INCHES                               BETA    =     .000   MPSRA  =      .000
LREF  =  1328.0002 INCHES   YMRP  =      .0000 INCHES                               POWER   =    1.000   OPR    =    28.310
BREF  =  1328.0002 INCHES   ZMRP  =   400.0000 INCHES                               SRMPR   =    2.020   RUDDER =    10.000
SCALE =       .0190

                               RUN NO.  102/ 0    RN/L =   2.79    GRADIENT INTERVAL =  -5.00/  5.00

  MACH       ALPHA       CNW         CHW         CBW         CHR        CHEI        CHEO         CN         CLMF        CLM        CAF
  .899      -7.860    -.12940      .01150    -.05770     -.04610      .05730      .03290    -.44780      .14350      .14890     .12276
  .902      -4.040     .00530      .00330     .00830     -.04150      .04770      .02360    -.20770      .04490      .05010     .13781
  .900       -.030     .13470     -.00770     .07210     -.04150      .04040      .01230     .02490     -.04860     -.04360     .13812
  .903       4.110     .24830     -.03010     .12560     -.04370      .04870      .02340     .25120     -.12880     -.12410     .14336
  .921       6.080     .28670     -.03540     .13920     -.04300      .04700      .02090     .32540     -.14590     -.14150     .15305
          GRADIENT     .02980     -.00411     .01438     -.00027      .00013     -.00001     .05630     -.02130     -.02136     .00068

                                       CALSPAN T14-053      01 T1 S1      IA36                                (AUF103)   ( 26 SEP 73  )

                 REFERENCE DATA                                                                                PARAMETRIC DATA

SREF  =  2690.0004 FT.SQU   XMRP  =   953.0001 INCHES                               ALPHA   =     .000   MPSRA  =      .000
LREF  =  1328.0002 INCHES   YMRP  =      .0000 INCHES                               POWER   =    1.000   OPR    =    28.310
BREF  =  1328.0002 INCHES   ZMRP  =   400.0000 INCHES                               SRMPR   =    2.020   RUDDER =    10.000
SCALE =       .0190

                               RUN NO.  103/ 0    RN/L =   2.79    GRADIENT INTERVAL =  -5.00/  5.00

  MACH       BETA        CNW         CHW         CBW         CHR        CHEI        CHEO         CN         CLMF        CLM        CAF
  .905      -6.090     .21770     -.04030     .10190     -.08810      .07380      .02340     .00290     -.03580     -.03020     .13627
  .895      -3.050     .19170     -.02740     .09300     -.05920      .06410      .01930     .01760     -.04430     -.03890     .13179
  .906        .000     .15280     -.00840     .08040     -.04400      .03580      .00740     .03540     -.05410     -.04910     .17095
  .900       3.060     .10850      .00550     .05880     -.04690      .02080      .00530     .01410     -.04160     -.03620     .15114
  .895       6.090     .04920      .01950     .03880     -.05120      .01140      .00580    -.00550     -.03080     -.02490     .14755
          GRADIENT    -.01362      .00538    -.00560      .00201     -.00709     -.00229    -.00058      .00044      .00044     .00480
```

CALSPAN T14-053 01 T1 S1 OPR = 2.45 X NOM (AUF104) (26 SEP 73)

REFERENCE DATA

SREF = 2690.0004 FT.SQU XMRP = 953.0001 INCHES
LREF = 1328.0002 INCHES YMRP = .0000 INCHES
BREF = 1328.0002 INCHES ZMRP = 400.0000 INCHES
SCALE = .0190

PARAMETRIC DATA

ALPHA = .000 MPSRA = .000
POWER = 1.000 OPP = 69.300
SRMPR = 2.020 RUDDER = 10.000

RUN NO. 104/ 0 RN/L = 2.79 GRADIENT INTERVAL = -5.00/ 5.00

MACH	BETA	CNW	CHW	CBW	CHR	CHEI	CHEO	CN	CLMF	CLM	CAF
.907	-6.090	.21870	-.03960	.10340	-.09350	.07450	.02620	.00580	-.03960	-.03380	.14700
.898	-3.050	.20220	-.02680	.09720	-.05850	.06440	.02090	.02410	-.05110	-.04510	.13608
.898	.000	.14090	-.00840	.07390	-.04100	.04090	.01330	.02250	-.04730	-.04130	.13566
.899	3.060	.10940	.00540	.05900	-.04670	.01980	.00710	.01910	-.04690	-.04090	.13956
.895	6.090	.05670	.01960	.04270	-.04610	.00900	.00860	-.00220	-.03380	-.02730	.12643
	GRADIENT	-.01519	.00527	-.01625	.01193	-.00730	-.00226	-.00082	.00059	.00070	.00057

CALSPAN T14-053 01 T1 S1 IA35 (AUF105) (26 SEP 73)

REFERENCE DATA

SREF = 2690.0004 FT.SQU XMRP = 953.0001 INCHES
LREF = 1328.0002 INCHES YMRP = .0000 INCHES
BREF = 1328.0002 INCHES ZMRP = 400.0000 INCHES
SCALE = .0190

PARAMETRIC DATA

ALPHA = .000 MPSRA = .000
POWER = 1.000 OPR = 36.200
SRMPR = 2.330 RUDDER = .000

RUN NO. 105/ 0 RN/L = 2.12 GRADIENT INTERVAL = -5.00/ 5.00

MACH	BETA	CNW	CHW	CBW	CHR	CHEI	CHEO	CN	CLMF	CLM	CAF
1.204	-6.080	.27500	-.01960	.13830	-.03340	.10160	-.00130	-.00760	-.01620	-.01060	.25354
1.201	-3.040	.22720	-.01400	.11530	-.01450	.08970	.01060	.00140	-.01740	-.01160	.25767
1.202	.000	.15230	-.00960	.08700	.00680	.07920	.02040	.01330	-.02160	-.01500	.26201
1.195	3.050	.03230	-.00320	.03940	.02510	.04050	.02890	-.00220	-.01450	-.00860	.24940
1.205	6.080	-.02520	.00170	.01450	.03380	.02580	.03540	-.00590	-.01520	-.00960	.24639
	GRADIENT	-.03201	.00117	-.01246	.00650	-.00808	.00300	-.00059	.00048	.00049	-.00136

CALSPAN T14-053 01 T1 S1 IA36 (AUF106) (26 SEP 73)

REFERENCE DATA

SREF = 2690.0004 FT.SQU
LREF = 1328.0002 INCHES
BREF = 1328.0002 INCHES
SCALE = .0190

XMRP = 953.0001 INCHES
YMRP = .0000 INCHES
ZMRP = 400.0000 INCHES

PARAMETRIC DATA

ALPHA = .000
POWER = .000
MPSRA = .000
RUDDER = .000

RUN NO. 106/ 0 RN/L = 2.11 GRADIENT INTERVAL = -5.00/ 5.00

MACH	BETA	CNW	CHW	CBW	CHR	CHEI	CHEO	CN	CLMF	CLM	CAF
1.206	-6.080	.27240	-.02060	.13830	-.03330	.10810	.00190	-.00630	-.01390	-.00790	.25277
1.205	-3.050	.21560	-.01490	.11200	-.01750	.09760	.01430	-.00070	-.01420	-.00820	.25827
1.204	.000	.14780	-.01070	.08360	.00190	.08800	.02380	.01320	-.01930	-.01350	.26505
1.204	3.050	.02910	-.00500	.03300	.02130	.05980	.03210	-.00170	-.01370	-.00760	.25552
1.204	6.060	-.04320	-.00050	.00780	.03630	.03950	.04150	-.00860	-.01330	-.00720	.25115
	GRADIENT	-.03057	.00162	-.01197	.00636	-.00620	.00292	-.00016	.00008	.00010	-.00045

CALSPAN T14-053 01 T1 S1 IA36 (AUF107) (26 SEP 73)

REFERENCE DATA

SREF = 2690.0004 FT.SQU
LREF = 1328.0002 INCHES
BREF = 1328.0002 INCHES
SCALE = .0190

XMRP = 953.0001 INCHES
YMRP = .0000 INCHES
ZMRP = 400.0000 INCHES

PARAMETRIC DATA

ALPHA = .000
POWER = .000
MPSRA = .000
RUDDER = .000

RUN NO. 107/ 0 RN/L = 2.75 GRADIENT INTERVAL = -5.00/ 5.00

MACH	BETA	CNW	CHW	CBW	CHR	CHEI	CHEO	CN	CLMF	CLM	CAF
.906	-6.080	.21830	-.03840	.10370	.00060	.07240	.03020	.00380	-.03860	-.03480	.11092
.911	-3.050	.20380	-.02240	.09820	.01580	.05950	.02400	.02340	-.05170	-.04820	.11924
.900	.000	.14330	-.00820	.07310	.00640	.03980	.01910	.02090	-.04560	-.04190	.11412
.901	3.050	.03940	.00430	.05680	-.00630	.02520	.01710	.01170	-.04250	-.03860	.11603
.903	6.090	.05110	.01900	.04210	.01620	.01130	.01550	-.00060	-.03480	-.03020	.10901
	GRADIENT	-.01711	.00438	-.00679	-.00362	-.00562	-.00113	-.00192	.00151	.00157	-.00053

CALSPAN T14-053   01 T1 S1   IA36   (AUF108)   (26 SEP 73)

REFERENCE DATA

SREF = 2690.0004 FT.SQU   XMRP = 953.0001 INCHES
LREF = 1328.0002 INCHES   YMRP = .0000 INCHES
BREF = 1328.0002 INCHES   ZMRP = 400.0000 INCHES
SCALE = .0190

PARAMETRIC DATA

ALPHA = .000   MPSRA = .000
POWER = 1.000   OPR = 28.310
SRMPR = 2.020   RUDDER = .000

RUN NO. 108/ 0   RN/L = 2.77   GRADIENT INTERVAL = -5.00/ 5.00

MACH	BETA	CNW	CHW	CBW	CHR	CHEI	CHEO	CN	CLMF	CLM	CAF
.902	-6.080	.22810	-.04230	.10600	.00640	.07540	.03620	.00740	-.04040	-.03510	.12281
.890	-3.050	.18670	-.02870	.09040	.01750	.06610	.03180	.02050	-.04720	-.04170	.11051
.900	.000	.15170	-.00820	.07850	.00470	.04050	.00870	.03150	-.05180	-.04670	.13887
.898	3.050	.10890	.00440	.05780	-.01400	.02450	.00740	01990	-.04640	-.04080	.12909
.902	6.090	.05770	.01930	.04150	.00630	.00930	.00500	.00000	-.03370	-.02790	.12755
	GRADIENT	-.01273	.00542	-.00534	-.00516	-.00681	-.00399	-.00010	.00013	.00015	.00304

CALSPAN T14-053   01 T1 S1   IA36   (AUF109)   (26 SEP 73)

REFERENCE DATA

SREF = 2690.0004 FT.SQU   XMRP = 953.0001 INCHES
LREF = 1328.0002 INCHES   YMRP = .0000 INCHES
BREF = 1328.0002 INCHES   ZMRP = 400.0000 INCHES
SCALE = .0190

PARAMETRIC DATA

BETA = .000   MPSRA = .000
POWER = 1.000   OPR = 36.200
SRMPR = 2.330   RUDDER = .000

RUN NO. 109/ 0   RN/L = 2.07   GRADIENT INTERVAL = -5.00/ 5.00

MACH	ALPHA	CNW	CHW	CBW	CHR	CHEI	CHEO	CN	CLMF	CLM	CAF
1.201	-.120	.13770	-.00930	.08240	-.00050	.07820	.02700	.01290	-.02440	-.01980	.26078
1.201	4.040	.25500	-.01110	.14790	-.00190	.06400	-.00220	.25020	-.11540	-.11010	.25680
1.203	5.920	.31920	-.01340	.17690	-.00450	.05780	-.01710	.35570	-.15400	-.14870	.25847
	GRADIENT	.02820	-.00043	.01575	-.00034	-.00341	-.00702	.05704	-.02188	-.02171	-.00096

```
DATE 05 NOV 75          TABULATED DATA FOR CAL T14-053 (IA36)
                                                                                   (AUF110)   ( 26 SEP 73  )
                               CALSPAN T14-053     01 T1 S1      IA36
                                                                               PARAMETRIC DATA
             REFERENCE DATA
                                                                   ALPHA  =      .000   MPSRA   =      .000
SREF  =  2690.0004 FT.SQU   XMRP  =    953.0001 INCHES             POWER  =     1.000   OPR     =    36.200
LREF  =  1328.0002 INCHES   YMRP  =       .0000 INCHES             SRMPR  =     2.330   RUDDER  =      .000
BREF  =  1328.0002 INCHES   ZMRP  =    400.0000 INCHES
SCALE =        .0150

                       RUN NO.  110/ 0    RN/L =     .16   GRADIENT INTERVAL =  -5.00/  5.00

  MACH     BETA      CNW       CHW       CBW       CHR       CHEI      CHEO      CN        CLMF      CLM       CAF
 1.199   -6.080    .27450   -.02010    .13720   -.01530    .09970    .00800   -.00740   -.01900   -.01390    .25175
 1.204   -3.040    .21710   -.01310    .11410    .01540    .08990    .01670   -.00460   -.01490   -.01000    .25211
 1.204     .000    .13960   -.00890    .08470   -.00070    .07850    .02500    .00260   -.01720   -.01280    .25961
 1 207    3.050    .02690   -.00250    .04060    .00210    .04500    .03210   -.00490   -.01590   -.01100    .25091
 1.196    6.080   -.02880    .00290    .01100    .03490    .02210    .03750   -.01460   -.01400   -.00910    .24464
       GRADIENT   -.03123    .00174   -.01207   -.00218   -.00737    .00253   -.00005   -.00016   -.00016   -.00020

                                                                                   (AUF111)   ( 26 SEP 73  )
                               CALSPAN T14-053     01 T1 S1      IA36
                                                                               PARAMETRIC DATA
             REFERENCE DATA
                                                                   BETA   =      .000   MPSRA   =      .000
SREF  =  2690.0004 FT.SQU   XMRP  =    953.0001 INCHES             POWER  =     1.000   OPR     =    28.310
LREF  =  1328.0002 INCHES   YMRP  =       .0000 INCHES             SRMPR  =     2.020   RUDDER  =      .000
BREF  =  1328.0002 INCHES   ZMRP  =    400.0000 INCHES
SCALE =        .0190

                       RUN NO.  111/ 0    RN/L =    2.69   GRADIENT INTERVAL =  -5.00/  5.00

  MACH     ALPHA     CNW       CHW       CBW       CHR       CHEI      CHEO      CN        CLMF      CLM       CAF
  .901   -8.110   -.14210    .01290   -.06480    .00390    .05880    .03200   -.46930    .15250    .15810    .11630
  .902   -4.120   -.00210    .00500    .00460    .00690    .04690    .02870   -.21570    .04830    .05370    .13157
  .904    -.100    .13790   -.00530    .07550    .00520    .03490    .01820    .01150   -.04010   -.03490    .13443
  .902    3.970    .24580   -.02900    .12270    .00430    .05040    .03390    .23480   -.12200   -.11700    .12637
  .902    5.990    .28300   -.04060    .13950    .00350    .05470    .02630    .34240   -.15830   -.15320    .12691
       GRADIENT    .03063   -.00421    .01459   -.00032    .00044    .00065    .05568   -.02105   -.02110   -.00065
```

CALSPAN T14-053 01 T1 S1 IA36 (AUF112) (26 SEP 73)

REFERENCE DATA

SREF = 2690.0004 FT.SQU XMRP = 953.0001 INCHES
LREF = 1328.0002 INCHES YMRP = .0000 INCHES
BREF = 1328.0002 INCHES ZMRP = 400.0000 INCHES
SCALE = .0190

PARAMETRIC DATA

ALPHA = .000 MPSRA = .000
POWER = 1.000 OPR = 28.310
SRMPR = 2.020 RUDDER = .000

RUN NO. 112/ 0 RN/L = 2.65 GRADIENT INTERVAL = -5.00/ 5.00

MACH	BETA	CNW	CHW	CBW	CHR	CHEI	CHEO	CN	CLMF	CLM	CAF
.903	-6.080	.21360	-.04070	.10270	-.01420	.07670	.03000	-.00100	-.03390	-.02840	.12925
.904	-3.050	.19450	-.02410	.09530	.01650	.06480	.02350	.01320	-.04450	-.03930	.13426
.901	.000	.14260	-.00640	.07490	.00530	.03790	.01820	.02470	-.05020	-.04510	.13524
.900	3.050	.10620	.00720	.06040	.00030	.01880	.01370	.00900	-.03740	-.03190	.13468
.901	6.090	.04220	.02090	.03810	.02750	.01180	.01290	-.00090	-.03560	-.02970	.12449
	GRADIENT	-.01448	.00513	-.00589	-.00266	-.00754	-.00161	-.00059	.00116	.00121	.00007

CALSPAN T14-053 01 T1 S1 IA36 (AUF113) (26 SEP 73)

REFERENCE DATA

SREF = 2690.0004 FT.SQU XMRP = 953.0001 INCHES
LREF = 1328.0002 INCHES YMRP = .0000 INCHES
BREF = 1328.0002 INCHES ZMRP = 400.0000 INCHES
SCALE = .0190

PARAMETRIC DATA

BETA = .000 MPSRA = .000
POWER = 1.000 OPR = 36.200
SRMPR = 2.330 RUDDER = .000

RUN NO. 113/ 0 RN/L = 2.06 GRADIENT INTERVAL = -5.00/ 5.00

MACH	ALPHA	CNW	CHW	CBW	CHR	CHEI	CHEO	CN	CLMF	CLM	CAF
1.204	-8.030	-.17310	-.00010	-.07910	.00410	.09950	.04180	-.50280	.18730	.19450	.25429
1.207	-4.010	.00040	-.00350	.00690	.00570	.08250	.03630	-.23350	.08460	.09140	.26891
1.207	.010	.15440	-.00800	.08610	.00690	.07050	.01880	.01220	-.01900	-.01230	.27220
1.199	3.990	.26470	-.00970	.14770	.00550	.04940	-.01030	.25050	-.11540	-.10860	.25826
1.203	6.000	.33410	-.01240	.18010	.00340	.04210	-.02500	.36600	-.16080	-.15420	.26005
	GRADIENT	.03305	-.00078	.01760	-.00002	-.00414	-.00582	.06050	-.02500	-.02500	-.00133

REPRODUCIBILITY OF THE
ORIGINAL PAGE IS POOR

CALSPAN T14-053 01 T1 S1 IA36 (AUF114) (26 SEP 73)

REFERENCE DATA

SREF = 2690.0004 FT.SOU XMRP = 953.0001 INCHES
LREF = 1328.0002 INCHES YMRP = .0000 INCHES
BREF = 1328.0002 INCHES ZMRP = 400.0000 INCHES
SCALE = .0190

PARAMETRIC DATA

ALPHA = .000 MPSRA = .000
POWER = 1.000 OPR = 36.200
SRMPR = 2.330 RUDDER = .000

RUN NO. 114/ 0 RN/L = 2.05 GRADIENT INTERVAL = -5.00/ 5.00

MACH	BETA	CNW	CHW	CBW	CHR	CHEI	CHEO	CN	CLMF	CLM	CAF
1.208	-6.070	.28490	-.01910	.14000	-.05140	.09290	.00140	-.00720	-.01560	-.00870	.25852
1.203	-3.040	.23290	-.01330	.11630	-.02420	.08000	.01360	.02470	-.03270	-.02560	.26044
1.198	.000	.15610	-.00870	.08660	.00640	.06850	.02090	.01400	-.01990	-.01320	.26778
1.203	3.050	.04140	-.00180	.04200	.03590	.03070	.02680	.00640	-.02020	-.01320	.25605
1.203	6.080	-.01520	.00410	.01490	.05820	.01280	.02950	-.00080	-.02070	-.01370	.25063
	GRADIENT	-.03145	.00189	-.01220	.00987	-.00810	.00217	-.00300	.00205	.00204	-.00072

CALSPAN T14-053 01 T1 S1 IA36 (AUF115) (26 SEP 73)

REFERENCE DATA

SREF = 2690.0004 FT.SOU XMRP = 953.0001 INCHES
LREF = 1328.0002 INCHES YMRP = .0000 INCHES
BREF = 1328.0002 INCHES ZMRP = 400.0000 INCHES
SCALE = .0190

PARAMETRIC DATA

BETA = .000 MPSRA = .000
POWER = 1.000 OPR = 28.310
SRMPR = 2.020 RUDDER = .000

RUN NO. 115/ 0 RN/L = 2.68 GRADIENT INTERVAL = -5.00/ 5.00

MACH	ALPHA	CNW	CHW	CBW	CHR	CHEI	CHEO	CN	CLMF	CLM	CAF
.901	-8.060	-.12770	.01550	-.05710	.00270	.05220	.03140	-.44560	.13540	.14250	.12998
.903	-3.970	.01510	.00710	.01280	.00240	.03650	.02530	-.18970	.03290	.03990	.13932
1.030	.070	.15330	-.00590	.08080	.00480	.03240	.01750	.05530	-.07380	-.06730	.14022
.901	4.020	.25250	-.02860	.12770	.00630	.04720	.03200	.26310	-.14220	-.13570	.13259
.900	5.930	.29920	-.03890	.14440	.00640	.05110	.02630	.36470	-.17470	-.16830	.13013
	GRADIENT	.02973	-.00446	.01439	.00049	.00133	.00093	.05669	-.02193	-.02199	-.00084

CALSPAN T14-053 01 T1 S1 IA36 (AUF116) (26 SEP 73)

REFERENCE DATA

SREF = 2690.0004 FT.SQU XMRP = 953.0001 INCHES
LREF = 1328.0002 INCHES YMRP = .0000 INCHES
BREF = 1328.0002 INCHES ZMRP = 400.0000 INCHES
SCALE = .0190

PARAMETRIC DATA

ALPHA = .000 MPSRA = .000
POWER = 1.000 OPR = 28.310
SRMPR = 2.020 RUDDER = .000

RUN NO. 116/ 0 RN/L = 2.69 GRADIENT INTERVAL = -5.00/ 5.00

MACH	BETA	CNW	CHW	CBW	CHR	CHEI	CHEO	CN	CLMF	CLM	CAF
.900	-6.080	.23030	-.04010	.10640	.00120	.07640	.03470	.02620	-.05420	-.04730	.13087
.902	-3.050	.21460	-.02450	.10140	.02800	.06350	.02900	.01870	-.04350	-.03700	.14025
.899	.000	.15500	-.00520	.08090	.00590	.03300	.01800	.05140	-.07020	-.06330	.13660
.899	3.060	.10930	.00790	.05340	-.00940	.01450	.01270	.04270	-.06690	-.05960	.13302
.901	6.090	.05030	.02200	.04140	.02210	.00460	.01430	.02500	-.05480	-.04750	.13184
	GRADIENT	-.01723	.00530	-.00622	-.00612	-.00802	-.00267	.00392	-.00383	-.00370	-.00118

CALSPAN T14-053 01 T1 S1 IA36 (AUF117) (26 SEP 73)

REFERENCE DATA

SREF = 2690.0004 FT.SQU XMRP = 953.0001 INCHES
LREF = 1328.0002 INCHES YMRP = .0000 INCHES
BREF = 1328.0002 INCHES ZMRP = 400.0000 INCHES
SCALE = .0190

PARAMETRIC DATA

BETA = .000 MPSRA = .000
POWER = .000 RUDDER = .000

RUN NO. 117/ 0 RN/L = 2.13 GRADIENT INTERVAL = -5.00/ 5.00

MACH	ALPHA	CNW	CHW	CBW	CHR	CHEI	CHEO	CN	CLMF	CLM	CAF
1.205	-8.090	-.17690	-.00300	-.07940	.00000	.12060	.04250	-.52290	.19940	.20520	.24622
1.178	-6.110	-.09130	-.00450	-.03850	.00070	.11090	.04030	-.37920	.14320	.14910	.24932
1.206	-4.070	-.00360	-.00610	.00540	.00150	.10180	.03780	-.24400	.08980	.09560	.25327
1.205	-2.010	.07780	-.00840	.04710	.00190	.09330	.03050	-.11190	.03350	.03940	.25555
1.205	-.030	.14950	-.01070	.08390	.00210	.08730	.01840	.00890	-.01680	-.01090	.25745
1.200	2.030	.21710	-.01320	.11960	.00220	.08080	.00530	.17120	-.06420	-.05830	25588
1.205	4.000	.26140	-.01190	.14520	.00310	.07100	-.00910	.24640	-.10830	-.10220	.24990
1.203	5.960	.32710	-.01460	.17470	.00260	.06180	-.02100	.35530	-.15110	-.14510	.24855
1.203	7.990	.37980	-.01650	.19930	.00260	.05040	-.03390	.47000	-.19480	-.18880	.24498
	GRADIENT	.03318	-.00081	.01745	.00017	-.00367	-.00589	.06065	-.02448	-.02445	-.00031

```
                                   CALSPAN T14-053     01 T1 S1     1A36                    (AUF118)   ( 26 SEP 73  )

            REFERENCE DATA                                                                     PARAMETRIC DATA

SREF  =  2690.0004 FT.SQU   XMRP  =   953.0001 INCHES                          ALPHA  =     .000   MPSRA  =      .000
LREF  =  1328.0002 INCHES   YMRP  =      .0000 INCHES                          POWER  =     .000   RUDDER =      .000
BREF  =  1328.0002 INCHES   ZMRP  =   400.0000 INCHES
SCALE =       .0190

                            RUN NO.  118/ 0    RN/L =   2.12    GRADIENT INTERVAL =  -5.00/  5.00

  MACH       BETA       CNW        CHW        CBW        CHR        CHEI       CHEO       CN         CLMF       CLM        CAF
  1.207     -8.080     .29200    -.02350     .13800    -.04500     .11350    -.00280    -.05050     .00170     .00780     .24019
  1.204     -6.060     .29110    -.02160     .13860    -.03040     .10490    -.00130    -.00820    -.01340    -.00740     .24398
  1.205     -4.030     .24960    -.01780     .12190    -.02050     .09940     .00610    -.00630    -.01280    -.00670     .24645
  1.205     -3.040     .22970    -.01560     .11330    -.01510     .09600     .00970    -.00260    -.01370    -.00780     .24873
  1.204     -2.020     .20950    -.01330     .10460    -.01140     .09230     .01290     .00030    -.01510    -.00910     .25137
  1.202       .000     .15970    -.01130     .08450     .00260     .08690     .01950     .00960    -.01790    -.01200     .25558
  1.203      2.020     .07330    -.00580     .05140     .01620     .07000     .02280    -.00470    -.01150    -.00540     .25142
  1.204      3.040     .03660    -.00540     .03850     .02120     .06030     .02670    -.00750    -.01060    -.00460     .24706
  1.205      4.030     .00410    -.00430     .02710     .02570     .05200     .03050    -.01350    -.00890    -.00280     .24500
  1.205      6.060    -.03510    -.00100     .00830     .03540     .04060     .03510    -.01190    -.01160    -.00550     .24078
  1.206      8.090    -.06270     .00200    -.00610     .05230     .03770     .03750    -.01540    -.01190    -.00570     .23822
          GRADIENT    -.03131     .00170    -.01212     .00596    -.00583     .00288    -.00091     .00055     .00056    -.00018

                                   CALSPAN T14-053     01 T1 S1     1A36                    (AUF119)   ( 26 SEP 73  )

            REFERENCE DATA                                                                     PARAMETRIC DATA

SREF  =  2690.0004 FT.SQU   XMRP  =   953.0001 INCHES                          BETA   =     .000   MPSRA  =      .000
LREF  =  1328.0002 INCHES   YMRP  =      .0000 INCHES                          POWER  =     .000   RUDDER =      .000
BREF  =  1328.0002 INCHES   ZMRP  =   400.0000 INCHES
SCALE =       .0190

                            RUN NO.  119/ 0    RN/L =   2.79    GRADIENT INTERVAL =  -5.00/  5.00

  MACH       ALPHA      CNW        CHW        CBW        CHR        CHEI       CHEO       CN         CLMF       CLM        CAF
   .902     -6.140    -.05480     .01020    -.02280     .00500     .04840     .02750    -.34110     .10360     .10860     .11828
   .903     -4.040     .01480     .00600     .01210     .00600     .04050     .02580    -.21100     .04840     .05330     .12136
   .902     -2.060     .08550     .00070     .04840     .00680     .03670     .02060    -.09120    -.00270     .00180     .12464
   .903       .010     .14940    -.00680     .08000     .00590     .03590     .01900     .02650    -.05010    -.04550     .12381
   .902      2.010     .19850    -.01920     .10210     .00530     .04440     .02680     .13390    -.08760    -.08320     .12071
   .902      4.000     .25280    -.03000     .12580     .00540     .05060     .03390     .23720    -.12270    -.11840     .11789
   .905      6.020     .29250    -.04000     .14130     .00600     .05480     .03050     .33350    -.15090    -.14670     .11594
   .902      7.990     .34180    -.04540     .16350     .00590     .05110     .02300     .43550    -.18740    -.18310     .11264
          GRADIENT     .02923    -.00456     .01395    -.00013     .00138     .00111     .05565    -.02120    -.02126    -.00054
```

```
                                        CALSPAN T14-053     01 T1 S1     IA36                       (AUF120)   ( 26 SEP 73  )

              REFERENCE DATA                                                                   PARAMETRIC DATA

SREF  =  2690.0004 FT.SQU   XMRP  =   953.0001 INCHES                              ALPHA  =       .000   MPSRA  =        .000
LREF  =  1328.0002 INCHES   YMRP  =      .0000 INCHES                              POWER  =       .000   RUDDER =        .000
BREF  =  1328.0002 INCHES   ZMRP  =   400.0000 INCHES
SCALE =        .0190

                         RUN NO.  120/ 0    RN/L =     .21    GRADIENT INTERVAL =  -5.00/  5.00

  MACH      BETA       CNW        CHW        CBW        CHR        CHEI       CHEO       CN         CLMF       CLM        CAF
   .904    -8.090     .21470    -.04710     .09840    -.01790     .08470     .03910    -.04440    -.01680    -.01140     .11334
   .902    -6.070     .22650    -.04070     .10630    -.00030     .07750     .03440     .00620    -.03930    -.03430     .11600
   .902    -4.040     .21460    -.02360     .10170     .02290     .06940     .02900     .01420    -.04490    -.04030     .11941
   .903    -3.040     .21220    -.02510     .09940     .02020     .06490     .02690     .01780    -.04620    -.04170     .12136
   .901    -2.030     .20170    -.01950     .09510     .01740     .05920     .02520     .02250    -.04820    -.04370     .12353
   .900     2.030     .13370     .00070     .07120    -.00340     .02370     .01490     .02260    -.04920    -.04450     .12255
   .903     3.040     .11300     .00630     .06380    -.00960     .01950     .01410     .01850    -.04760    -.04260     .11739
   .903     4.040     .09510     .01220     .05630    -.00740     .01450     .01270     .01060    -.04230    -.03730     .12210
   .903     6.070     .05590     .02040     .04260     .01720     .01020     .01350     .00160    -.03560    -.03010     .11481
   .900     8.100     .02210     .02700     .02850     .02970     .00640     .01550    -.01440    -.02630    -.02030     .10685
          GRADIENT   -.01554     .00515    -.00573    -.00430    -.00727    -.00212    -.00021     .00007     .00013    -.00005
```

CAL T14-053 IA36 02 + T1 + S1 UPPER MPS NOZZLE (RUFA01) (15 NOV 73)

REFERENCE DATA

SREF = 49 4000 SQ.FT. XMRP = 158.0000 INCHES
LREF = 90.7000 INCHES YMRP = .0000 INCHES
BREF = 90.7000 INCHES ZMRP = .0000 INCHES
SCALE = .0190 SCALE

PARAMETRIC DATA

BETA = .000 POWER = .000
GP1 = 11.000 GY1 = -9.000
GP2 = .000 GY2 = -9.000
GP3 = .000 GY3 = .000

MACH (1) = .901 ALPHA (1) = -8.088

SECTION (1)UPPER MPS NOZZLE DEPENDENT VARIABLE CP

X/DE	.0580	.2320	.4060	.5800	.7540	.9280
PHI						
.000	.0330	.2580	.3210	.0950	-.1890	-.2060
30.000	.1770	.3680	.4750	.1990	-.2040	-.2050
60.000	.3780	-.1810	-.3590	-.3440	-.2070	-.1970
90.000	-.4980	-.5850	-.3430	-.2110	-.1980	-.1990
120.000	-.1970		-.2100	-.2030	-.1960	-.2020
150.000	-.2040	-.2090	-.2040	-.2010	-.2030	-.1820
180.000	-.2160	-.2010		-.2050	-.1830	-.1850
210.000	-.2040	-.1940	-.1910	-.1840	-.1910	-.2030
240.000	-.1940	-.2380	-.2010	-.1860	-.2090	-.1990
270.000	-.2480	-.2390	-.2410	-.2060	-.2050	-.1920
300.000	-.2370	-.2240		-.2470	-.2280	-.2050
330.000	-.2600	-.1310	-.2360	-.2620	-.2250	-.1920
360.000	.0330	.2580	.3210	.0950	-.1890	-.2060

MACH (1) = .900 ALPHA (2) = -4.049

SECTION (1)UPPER MPS NOZZLE DEPENDENT VARIABLE CP

X/DE	.0580	.2320	.4060	.5800	.7540	.9280
PHI						
.000	.0100	.2550	.3030	-.0250	-.1890	-.1940
30.000	.1940	.3510	.3600	.1050	-.1840	-.1950
60.000	.3130	-.2010	-.3130	-.3060	-.1980	-.1850
90.000	-.4590	-.5650	-.3040	-.2010	-.1900	-.1970
120.000	-.2020		-.2030	-.1900	-.1950	-.1980
150.000	-.1950	-.2070	-.1950	-.1980	-.2030	-.1810
180.000	-.2000	-.1990		-.2010	-.1790	-.1780
210.000	-.1950	-.2010	-.2010	-.1800	-.1800	-.1970
240.000	-.2040	-.2240	-.2010	-.1850	-.1960	-.1930
270.000	-.2270	-.2160	-.2170	-.2030	-.1890	-.2020
300.000	-.2270	-.2130		-.2370	-.2190	-.2000
330.000	-.2650	-.1500	-.2270	-.2480	-.2250	-.1780
360.000	.0100	.2550	.3030	-.0250	-.1890	-.1940

```
                                   CAL T14-053 IA36 02 + T1 + S1 UPPER MPS NOZZLE               (RUFA01)

MACH  ( 1) =      .900    ALPHA ( 3) =      .013

 SECTION ( 1)UPPER MPS NOZZLE              DEPENDENT VARIABLE CP

X/DE         .0580   .2320   .4060   .5800   .7540   .9280

  PHI
    .000     .0070   .2320   .2880  -.0360  -.1760  -.1780
  30.000     .1320   .2830   .2870   .1010  -.1700  -.1930
  60.000     .2270  -.1820  -.2650  -.2770  -.2040  -.1750
  90.000    -.3910  -.4800  -.2670  -.1930  -.1710  -.1840
 120.000    -.1810          -.1950  -.1720  -.1810  -.1830
 150.000    -.1790  -.1930  -.1760  -.1790  -.1860  -.1630
 180.000    -.2020  -.1740          -.1840  -.1680  -.1580
 210.000    -.1710  -.1790  -.1800  -.1680  -.1570  -.1950
 240.000    -.1910  -.2050  -.1840  -.1630  -.1960  -.1710
 270.000    -.1890  -.1890  -.1900  -.2000  -.1720  -.1780
 300.000    -.2170  -.2150          -.2230  -.1980  -.1770
 330.000    -.2550  -.1450  -.2030  -.2370  -.2100  -.1670
 360.000     .0070   .2320   .2880  -.0360  -.1760  -.1780

MACH  ( 1) =      .899    ALPHA ( 4) =     4.005

 SECTION ( 1)UPPER MPS NOZZLE              DEPENDENT VARIABLE CP

X/DE         .0580   .2320   .4060   .5800   .7540   .9280

  PHI
    .000     .0170   .2520   .2980  -.0360  -.1490  -.1580
  30.000     .1420   .2570   .2430   .0480  -.1520  -.1890
  60.000     .1430  -.1580  -.2380  -.2460  -.1970  -.1630
  90.000    -.3490  -.4340  -.2540  -.1910  -.1660  -.1830
 120.000    -.1690          -.1870  -.1660  -.1790  -.1670
 150.000    -.1700  -.1910  -.1660  -.1780  -.1750  -.1570
 180.000    -.1920  -.1620          -.1700  -.1610  -.1470
 210.000    -.1620  -.1890  -.1820  -.1490  -.1460  -.1930
 240.000    -.1810  -.1760  -.1680  -.1460  -.1890  -.1610
 270.000    -.1780  -.1680  -.1760  -.1880  -.1660  -.1790
 300.000    -.2030  -.2050          -.2120  -.1980  -.1680
 330.000    -.2520  -.1190  -.1740  -.2270  -.1900  -.1470
 360.000     .0170   .2520   .2980  -.0360  -.1490  -.1580
```

```
DATE 05 NOV 75             TABULATED DATA FOR CAL T14-053 (IA36)

                                  CAL T14-053 IA36 O2 + T1 + S1 UPPER MPS NOZZLE                    (RUFA01)

MACH  ( 1) =     .899    ALPHA ( 5) =     6.006

 SECTION ( 1)UPPER MPS NOZZLE                   DEPENDENT VARIABLE CP

X/DE          .0580   .2320   .4060   .5800   .7540   .9280

  PHI
    .000      .0140   .2610   .3360  -.0490  -.1680  -.1640
  30.000      .1280   .2460   .2100   .0260  -.1580  -.2000
  60.000      .1270  -.1550  -.2180  -.2370  -.2020  -.1520
  90.000     -.3340  -.3900  -.2430  -.1950  -.1510  -.1680
 120.000     -.1590          -.2000  -.1550  -.1650  -.1780
 150.000     -.1710  -.1920  -.1490  -.1680  -.1820  -.1490
 180.000     -.1850  -.1530          -.1780  -.1510  -.1550
 210.000     -.1580  -.1750  -.1730  -.1530  -.1550  -.1920
 240.000     -.1670  -.1080  -.1760  -.1570  -.1910  -.1470
 270.000     -.1840  -.1720  -.1760  -.1910  -.1470  -.1670
 300.000     -.2110  -.2050          -.2010  -.1780  -.1740
 330.000     -.2570  -.1230  -.1610  -.2080  -.1960  -.1620
 360.000      .0140   .2610   .3360  -.0490  -.1580  -.1640
```

```
DATE 05 NOV 75            TABULATED DATA FOR CAL T14-053 (IA36)                                                   PAGE  113

                                   CAL T14-053 IA36 O2 + T1 + S1 UPPER MPS NOZZLE                 (RUFA02)    ( 15 NOV 73  )

                 REFERENCE DATA                                                                        PARAMETRIC DATA

SREF   =     49.4000 SQ.FT.    XMRP   =   158.0000 INCHES                              ALPHA   =       .000   POWER   =       .000
LREF   =     90.7000 INCHES    YMRP   =      .0000 INCHES                              GP1     =     11.000   GY1     =     -9.000
BREF   =     90.7000 INCHES    ZMRP   =      .0000 INCHES                              GP2     =       .000   GY2     =     -9.000
SCALE  =       .0190 SCALE                                                             GP3     =       .000   GY3     =       .000

MACH  ( 1) =      .901    BETA  ( 1) =    -6.079

 SECTION ( 1)UPPER MPS NOZZLE                    DEPENDENT VARIABLE CP

X/DE          .0580    .2320    .4060    .5800    .7540    .9280

 PHI
     .000    -.1250   -.0950   -.1420   -.1790   -.1580   -.1550
   30.000    -.0660   -.0350   -.1750   -.1650   -.1530   -.2000
   60.000    -.1440   -.1940   -.1840   -.1610   -.2050   -.1630
   90.000    -.1780   -.1870   -.1570   -.1980   -.1740   -.1990
  120.000    -.1650            -.1910   -.1640   -.1830   -.1810
  150.000    -.1610   -.1950   -.1680   -.1910   -.1690   -.1660
  180.000    -.1980   -.1530            -.1750   -.1740   -.1510
  210.000    -.1570   -.1900   -.1870   -.1610   -.1640   -.1900
  240.000    -.1810   -.1860   -.1810   -.1600   -.1940   -.1630
  270.000    -.[illegible]0   -.1750   -.1610   -.1950   -.1630   -.1890
  300.000    -.2170   -.1370            -.1770   -.1870   -.1810
  330.000    -.0700    .1020   -.0560   -.1360   -.1840   -.1600
  360.000    -.1250   -.0950   -.1420   -.1790   -.1580   -.1550

MACH  ( 1) =      .900    BETA  ( 2) =    -3.049

 SECTION ( 1)UPPER MPS NOZZLE                    DEPENDENT VARIABLE CP

X/DE          .0580    .2320    .4060    .5800    .7540    .9280

 PHI
     .000    -.0870    .0560    .0150   -.1440   -.1610   -.1510
   30.000     .0400    .2450    .1490   -.0990   -.1660   -.1770
   60.000    -.0300   -.2300   -.2060   -.2020   -.1810   -.1530
   90.000    -.2250   -.2370   -.1830   -.1790   -.1520   -.1700
  120.000    -.1480            -.1840   -.1530   -.1670   -.1690
  150.000    -.1530   -.1840   -.1640   -.1630   -.1750   -.1530
  180.000    -.1820   -.1550            -.1700   -.1600   -.1450
  210.000    -.1610   -.1700   -.1620   -.1590   -.1530   -.1760
  240.000    -.1720   -.1710   -.1680   -.1520   -.1810   -.1610
  270.000    -.1860   -.1710   -.1630   -.1790   -.1620   -.1680
  300.000    -.1980   -.1450            -.1760   -.1690   -.1670
  330.000    -.1470    .0340   -.0200   -.1760   -.1670   -.1560
  360.000    -.0870    .0560    .0150   -.1440   -.1610   -.1510
```

```
DATE 05 NOV 75              TABULATED DATA FOR CAL T14-053 (IA3G)

                                   CA: T14-053 IA36 O2 + T1 + S1 UPPER MPS NOZZLE                  (RUFA02)

MACH  ( 1) =     .901    BETA  ( 3) =     .000

 SECTION ( 1)UPPER MPS NOZZLE                   DEPENDENT VARIABLE CP

X/DE          .0580   .2320   .4060   .5800   .7540   .9280

  PHI
    .000      .0150   .2320   .2790  -.0170  -.1670  -.1730
  30.000      .1480   .2730   .2980   .0810  -.1680  -.1960
  60.000      .2030  -.1860  -.2720  -.2720  -.1930  -.1680
  90.000     -.3810  -.4850  -.2800  -.1900  -.1650  -.1970
 120.000     -.1800           -.1980  -.1690  -.1880  -.1760
 150.000     -.1750  -.1960  -.1760  -.1860  -.1790  -.1650
 180.000     -.2030  -.1760           -.1740  -.1700  -.1590
 210.000     -.1770  -.1880  -.1690  -.1650  -.1600  -.1930
 240.000     -.1920  -.1980  -.1710  -.1620  -.1880  -.1720
 270.000     -.1880  -.1920  -.1930  -.1910  -.1750  -.1940
 300.000     -.2130  -.2160           -.2170  -.2050  -.1720
 330.000     -.2590  -.1310  -.1770  -.2440  -.1950  -.1670
 360.000      .0150   .2320   .2790  -.0170  -.1670  -.1730
MACH  ( 1) =     .900    BETA  ( 4) =    3.051

 SECTION ( 1)UPPER MPS NOZZLE                   DEPENDENT VARIABLE CP

X/DE          .0580   .2320   .4060   .5800   .7540   .9280

  PHI
    .000      .0210   .2620   .2880   .2940  -.1770  -.1950
  30.000      .2040   .3410   .2810   .2340  -.2000  -.2290
  60.000      .3420  -.0080  -.2810  -.3350  -.2430  -.1980
  90.000     -.4610  -.5080  -.4440  -.2230  -.1900  -.1980
 120.000     -.2460           -.2210  -.1940  -.2020  -.2070
 150.000     -.2100  -.2260  -.1990  -.2050  -.2020  -.1900
 180.000     -.2090  -.1910           -.2010  -.1890  -.1820
 210.000     -.1920  -.2050  -.2030  -.1880  -.1810  -.2210
 240.000     -.2110  -.2090  -.2010  -.1870  -.2170  -.1910
 270.000     -.2110  -.2160  -.2170  -.2200  -.1980  -.2050
 300.000     -.2160  -.2630           -.2420  -.2550  -.1960
 330.000     -.3500  -.3590  -.3940  -.2890  -.2330  -.2220
 360.000      .0210   .2620   .2880   .2940  -.1770  -.1950
```

```
DATE 05 NOV 75            TABULATED DATA FOR CAL T14-053 (IA36)
                                  CAL T14-053 IA36 02 + T1 + S1 UPPER MPS NOZZLE               (RUFA02)

MACH  ( 1) =     .901    BETA  ( 5) =     6.089

 SECTION ( 1)UPPER MPS NOZZLE                       DEPENDENT VARIABLE CP

X/DE          .0580   .2320   .4060   .5800   .7540   .9280

  PHI
    .000      .0560   .3130   .3160   .3830   .0070  -.2170
  30.000      .3130   .4940   .4010   .3480  -.1820  -.2490
  60.000      .5110   .2630  -.2370  -.4050  -.2940  -.2320
  90.000     -.4610  -.4380  -.4910  -.2620  -.2250  -.2320
 120.000     -.3120          -.2340  -.2140  -.2340  -.2280
 150.000     -.2510  -.2380  -.2450  -.2390  -.2240  -.2060
 180.000     -.2410  -.2190          -.2280  -.2070  -.2090
 210.000     -.2100  -.2260  -.2370  -.2040  -.2070  -.2250
 240.000     -.2400  -.2260  -.2240  -.2130  -.2320  -.2120
 270.000     -.2330  -.2470  -.2530  -.2350  -.2300  -.2280
 300.000     -.2820  -.3750          -.2740  -.2740  -.2380
 330.000     -.3650  -.4840  -.4900  -.4150  -.2500  -.2300
 360.000      .0560   .3130   .3160   .3830   .0070  -.2170
```

```
DATE 05 NOV 75            TABULATED DATA FOR CAL T14-053 (IA36)                                               PAGE  116

                                    CAL T14-053 IA36 O2 + T1 + S1 UPPER MPS NOZZLE                (RUFA03)   ( 15 NOV 73  )

                 REFERENCE DATA                                                                         PARAMETRIC DATA

SREF  =    49.4000 SQ.FT.    XMRP  =   158.0000 INCHES                         BETA   =      .000   POWER  =      1.000
LREF  =    90.7000 INCHES    YMRP  =      .0000 INCHES                         JPR    =    36.200   SRMPR  =      2.330
BREF  =    90.7000 INCHES    ZMRP  =      .0000 INCHES                         GP1    =    11.000   GY1    =     -9.000
SCALE =      .0190 SCALE                                                       GP2    =      .000   GY2    =     -9.000
                                                                               GP3    =      .000   GY3    =     -9.000

MACH  ( 1) =      .897    ALPHA ( 1) =    -8.088

 SECTION ( 1)UPPER MPS NOZZLE                 DEPENDENT VARIABLE CP

X/DE          .0580    .2320    .4060    .5800    .7540    .9280

  PHI
    .000    -.0780    .2600    .3090    .0830   -.2510   -.2720
  30.000     .1560    .3610    .4620    .5510   -.2640   -.3240
  60.000     .3400   -.3540   -.4180   -.4480   -.3360   -.2940
  90.000    -.4590   -.6320   -.4660   -.3410   -.2920   -.2810
 120.000    -.3650            -.3340   -.2850   -.2810   -.2710
 150.000    -.2960   -.3380   -.2870   -.2830   -.2690   -.2650
 180.000    -.3330   -.2840            -.2650   -.2650   -.2580
 210.000    -.2830   -.2770   -.2770   -.2600   -.2560   -.3390
 240.000    -.2900   -.2670   -.2650   -.2500   -.3390   -.2850
 270.000    -.3180   -.3130   -.3100   -.3300   -.2820   -.2810
 300.000    -.5220   -.3000            -.3640   -.3200   -.2590
 330.000    -.4920   -.0740   -.2630   -.3390   -.2960   -.2870
 360.000    -.0780    .2600    .3090    .0830   -.2510   -.2720

MACH  ( 1) =      .899    ALPHA ( 2) =    -4.038

 SECTION ( 1)UPPER MPS NOZZLE                 DEPENDENT VARIABLE CP

X/DE          .0580    .2320    .4060    .5800    .7540    .9280

  PHI
    .000    -.0660    .2440    .2950   -.0450   -.2410   -.2550
  30.000     .1850    .3530    .3590    .3840   -.2320   -.2530
  60.000     .2720   -.3150   -.3570   -.3660   -.2570   -.2560
  90.000    -.3870   -.5860   -.3810   -.2600   -.2630   -.2670
 120.000    -.3030            -.2510   -.2550   -.2610   -.2400
 150.000    -.2470   -.2550   -.2560   -.2640   -.2360   -.2450
 180.000    -.2440   -.2530            -.2330   -.2390   -.2340
 210.000    -.2570   -.2540   -.2550   -.2350   -.2290   -.2500
 240.000    -.2680   -.2380   -.2320   -.2310   -.2430   -.2560
 270.000    -.2700   -.2920   -.2610   -.2600   -.2490   -.2530
 300.000    -.4690   -.2830            -.3040   -.2900   -.2290
 330.000    -.5250   -.2030   -.2750   -.3250   -.2480   -.2650
 360.000    -.0660    .2440    .2950   -.0450   -.2410   -.2550
```

```
                              CAL T14-053 IA36 O2 + T1 + S1 UPPER MPS NOZZLE                  (RUFA03)

MACH  ( 1) =      .901    ALPHA ( 3) =      .001

 SECTION ( 1)UPPER MPS NOZZLE                  DEPENDENT VARIABLE CP

X/DE         .0580   .2320   .4060   .5800   .7540   .9280

  PHI
    .000    -.0860   .2210   .2880  -.0770  -.2120  -.2260
  30.000     .1180   .2800   .2750   .3010  -.2080  -.2320
  60.000     .2030  -.2910  -.3340  -.3320  -.2380  -.2350
  90.000    -.3640  -.5770  -.3570  -.2340  -.2420  -.2440
 120.000    -.2730          -.2340  -.2430  -.2390  -.2290
 150.000    -.2330  -.2350  -.2400  -.2380  -.2260  -.2350
 180.000    -.2290  -.2370          -.2250  -.2280  -.2220
 210.000    -.2380  -.2360  -.2350  -.2270  -.2150  -.2180
 240.000    -.2420  -.2230  -.2230  -.2090  -.2120  -.2350
 270.000    -.2260  -.2700  -.2250  -.2350  -.2290  -.2330
 300.000    -.4300  -.2760          -.2890  -.2600  -.2160
 330.000    -.4980  -.1920  -.2460  -.2980  -.2300  -.2480
 360.000    -.0860   .2210   .2880  -.0770  -.2120  -.2260

MACH  ( 1) =      .902    ALPHA ( 4) =     4.026

 SECTION ( 1)UPPER MPS NOZZLE                  DEPENDENT VARIABLE CP

X/DE         .0580   .2320   .4060   .5800   .7540   .9280

  PHI
    .000    -.0640   .2440   .3230  -.0620  -.2210  -.2110
  30.000     .1120   .2600   .2140   .0680  -.1960  -.2270
  60.000     .1050  -.2630  -.3230  -.3090  -.2250  -.2290
  90.000    -.3580  -.5790  -.3340  -.2300  -.2340  -.2540
 120.000    -.2560          -.2240  -.2330  -.2480  -.2250
 150.000    -.2240  -.2230  -.2260  -.2460  -.2220  -.2260
 180.000    -.2190  -.2270          -.2190  -.2230  -.2130
 210.000    -.2270  -.2430  -.2450  -.2210  -.2130  -.2240
 240.000    -.2580  -.2170  -.2160  -.2080  -.2110  -.2200
 270.000    -.2290  -.2430  -.2180  -.2270  -.2180  -.2390
 300.000    -.4170  -.2850          -.2900  -.2610  -.2110
 330.000    -.4880  -.1590  -.2210  -.2960  -.2310  -.2140
 360.000    -.0640   .2440   .3230  -.0620  -.2210  -.2110
```

```
DATE 05 NOV 75             TABULATED DATA FOR CAL T14-053 (IA36)

                                  CAL T14-053 IA36 O2 + T1 + S1 UPPER MPS NOZZLE                (RUFA03)

MACH  ( 1) =      .898    ALPHA ( 5) =      6.021

 SECTION ( 1)UPPER MPS NOZZLE                     DEPENDENT VARIABLE CP

X/DE          .0580    .2320    .4060    .5800    .7540    .9280

  PHI
     .000    -.0920    .2500    .3520   -.0540   -.2190   -.2300
   30.000     .0680    .2460    .1900    .0220   -.2100   -.2700
   60.000     .0910   -.2660   -.3330   -.3120   -.2640   -.2340
   90.000    -.3620   -.5700   -.3410   -.2670   -.2390   -.2230
  120.000    -.2610            -.2690   -.2380   -.2220   -.2340
  150.000    -.2320   -.2700   -.2370   -.2230   -.2360   -.2420
  180.000    -.2700   -.2390            -.2320   -.2400   -.2260
  210.000    -.2410   -.2190   -.2260   -.2370   -.2230   -.2710
  240.000    -.2300   -.2310   -.2320   -.2140   -.2580   -.2270
  270.000    -.2380   -.2330   -.2240   -.2690   -.2320   -.2260
  300.000    -.4200   -.2910            -.2920   -.2430   -.2220
  330.000    -.4960   -.1870   -.2120   -.2720   -.2400   -.2200
  360.000    -.0920    .2500    .3520   -.0540   -.2190   -.2300
```

```
                                          CAL T14-053 IA36 02 + T1 + S1 UPPER MPS NOZZLE                (RUFA04)    ( 15 NOV 73  )

                 REFERENCE DATA                                                                                  PARAMETRIC DATA

SREF  =       49.4000 SQ.FT.   XMRP  =   158.0000 INCHES                                 ALPHA   =      .000   POWER   =     1.000
LREF  =       90.7000 INCHES   YMRP  =      .0000 INCHES                                 OPR     =    36.200   SRMPR   =     2.330
BREF  =       90.7000 INCHES   ZMRP  -      .0000 INCHES                                 GP1     =    11.000   GY1     =    -9.000
SCALE =         .0190 SCALE                                                              GP2     =      .000   GY2     =    -9.000
                                                                                         GP3     =      .000   GY3     =    -9.000

MACH  ( 1) =      .899    BETA  ( 1) =   -6.078

 SECTION ( 1)UPPER MPS NOZZLE                 DEPENDENT VARIABLE CP

X/DE          .0580   .2320   .4060   .5800   .7540   .9280

 PHI
    .000     -.2680  -.1440  -.1950  -.2400  -.2250  -.2140
  30.000     -.1480  -.0140  -.2250  -.2360  -.2120  -.2550
  60.000     -.2490  -.2430  -.2360  -.2220  -.2610  -.2480
  90.000     -.2470  -.2430  -.2280  -.2560  -.2430  -.2560
 120.000     -.2420          -.2580  -.2500  -.2580  -.2430
 150.000     -.2490  -.2670  -.2610  -.2600  -.2400  -.2340
 180.000     -.2580  -.2600          -.2420  -.2290  -.2260
 210.000     -.2510  -.2440  -.2580  -.2120  -.2020  -.2480
 240.000     -.2400  -.2330  -.2400  -.2120  -.2450  -.2520
 270.000     -.2460  -.2450  -.2160  -.2590  -.2480  -.2510
 300.000     -.4160  -.2060          -.2650  -.2510  -.2300
 330.000     -.1600   .1370  -.0710  -.2080  -.2320  -.2220
 360.000     -.2680  -.1440  -.1950  -.2400  -.2250  -.2140

MACH  ( 1) =      .900    BETA  ( 2) =   -3.049

 SECTION ( 1)UPPER MPS NOZZLE                 DEPENDENT VARIABLE CP

X/DE          .0580   .2320   .4060   .5800   .7540   .9280

 PHI
    .000     -.2550   .0290   .0360  -.1980  -.2080  -.2120
  30.000     -.0240   .2040   .1570  -.1080  -.2080  -.2490
  60.000     -.0660  -.2990  -.2920  -.2730  -.2410  -.2220
  90.000     -.3240  -.3370  -.2630  -.2380  -.2280  -.2370
 120.000     -.2290          -.2460  -.2260  -.2340  -.2270
 150.000     -.2330  -.2470  -.2360  -.2370  -.2260  -.2140
 180.000     -.2480  -.2380          -.2260  -.2070  -.2140
 210.000     -.2220  -.2270  -.2310  -.2030  -.2020  -.2340
 240.000     -.2340  -.2160  -.2170  -.2090  -.2370  -.2280
 270.000     -.2020  -.2290  -.2100  -.2460  -.2240  -.2350
 300.000     -.3730  -.2190          -.2830  -.2400  -.2050
 330.000     -.3340  -.0200  -.0150  -.2080  -.2040  -.2040
 360.000     -.2550   .0290   .0360  -.1980  -.2080  -.2120
```

```
DATE 05 NOV 75            TABULATED DATA FOR CAL T14-053 (IA36)                                                   PAGE  120

                                      CAL T14-053 IA36 02 + T1 + S1 UPPER MPS NOZZLE                 (RUFA04)

MACH  ( 1) =      .899    BETA  ( 3) =      .000

 SECTION ( 1)UPPER MPS NOZZLE             DEPENDENT VARIABLE CP

X/DE         .0580   .2320   .4060   .5800   .7540   .9280

  PHI
    .000    -.1050   .2110   .2710  -.0640  -.2290  -.2270
  30.000     .1080   .2730   .2880   .1340  -.2100  -.2560
  60.000     .1770  -.2940  -.3510  -.3410  -.2480  -.2430
  90.000    -.3700  -.6050  -.3590  -.2550  -.2470  -.2500
 120.000    -.2550          -.2530  -.2450  -.2450  -.2340
 150.000    -.2400  -.2550  -.2470  -.2470  -.2320  -.2330
 180.000    -.2440  -.2430          -.2270  -.2290  -.2280
 210.000    -.2440  -.2330  -.2400  -.2330  -.2230  -.2450
 240.000    -.2510  -.2300  -.2250  -.2190  -.2440  -.2390
 270.000    -.2460  -.2350  -.2280  -.2540  -.2390  -.2380
 300.000    -.4120  -.2900          -.2970  -.2570  -.2200
 330.000    -.5020  -.1920  -.2540  -.3020  -.2360  -.2270
 360.000    -.1050   .2110   .2710  -.0640  -.2290  -.2270

MACH  ( 1) =      .898    BETA  ( 4) =     3.051

 SECTION ( 1)UPPER MPS NOZZLE             DEPENDENT VARIABLE CP

X/DE         .0580   .2320   .4060   .5800   .7540   .9280

  PHI
    .000    -.0570   .2590   .2860   .3570  -.2340  -.2580
  30.000     .1890   .3440   .2800   .2610  -.2460  -.2840
  60.000     .3590  -.1890  -.3350  -.4170  -.3120  -.2770
  90.000    -.4150  -.5570  -.5480  -.2850  -.2830  -.2800
 120.000    -.2860          -.2710  -.2720  -.2760  -.2550
 150.000    -.3050  -.2720  -.2700  -.2770  -.2560  -.2460
 180.000    -.2740  -.2740          -.2460  -.2380  -.2510
 210.000    -.2700  -.2720  -.2720  -.2340  -.2430  -.2680
 240.000    -.2620  -.2490  -.2460  -.2470  -.2660  -.2640
 270.000    -.2640  -.2690  -.2650  -.2720  -.2770  -.2630
 300.000    -.4250  -.3760          -.2970  -.3140  -.2410
 330.000    -.6430  -.4710  -.5630  -.3980  -.2910  -.2710
 360.000    -.0570   .2590   .2860   .3570  -.2340  -.2580
```

CAL T14-053 IA35 02 + T1 + S1 UPPER MPS NOZZLE (RUFA04)

MACH (1) = .899 BETA (5) = 6.088

SECTION (1)UPPER MPS NOZZLE DEPENDENT VARIABLE CP

X/DE	.0580	.2320	.4060	.5800	.7540	.9280
PHI						
.000	.0040	.3190	.3300	.4510	-.0030	-.2790
30.000	.3230	.5370	.3950	.3400	-.2440	-.3150
60.000	.5340	.0900	-.2780	-.4940	-.3560	-.3150
90.000	-.5060	-.5330	-.5820	-.3160	-.3030	-.3010
120.000	-.3550		-.2930	-.2940	-.3020	-.2730
150.000	-.3520	-.3020	-.3150	-.3030	-.2710	-.2670
180.000	-.2920	-.3000		-.2580	-.2610	-.2730
210.000	-.2870	-.2970	-.2980	-.2660	-.2530	-.2720
240.000	-.2890	-.2630	-.2620	-.2680	-.2780	-.2660
270.000	-.3180	-.3150	-.3170	-.2830	-.3060	-.2870
300.000	-.5520	-.4840		-.3400	-.3430	-.2610
330.000	-.6320	-.5730	-.6650	-.5270	-.3080	-.2910
360.000	.0040	.3190	.3300	.4610	-.0030	-.2790

CAL T14-053 IA36 02 + T1 + S1 UPPER MPS NOZZLE

(RUFA05) (15 NOV 73)

REFERENCE DATA

SREF = 49.4000 SQ.FT. XMRP = 158.0000 INCHES
LREF = 90.7000 INCHES YMRP = .0000 INCHES
BREF = 90.7000 INCHES ZMRP = .0000 INCHES
SCALE = .0190 SCALE

PARAMETRIC DATA

BETA = .000 POWER = .000
GP1 = 11.000 GY1 = -9.000
GP2 = .000 GY2 = -9.000
GP3 = .000 GY3 = .000

MACH (1) = 1.203 ALPHA (1) = -8.101

SECTION (1)UPPER MPS NOZZLE DEPENDENT VARIABLE CP

X/DE	.0580	.2320	.4060	.5800	.7540	.9280
PHI						
.000	.1810	.4030	.4300	.5980	-.2370	-.2940
30.000	.3020	.4130	.5280	.4600	-.2370	-.3090
60.000	.5910	.0510	-.4160	-.3840	-.3300	-.2910
90.000	-.3590	-.3760	-.4440	-.3070	-.2930	-.2940
120.000	-.3140		-.3090	-.2950	-.2960	-.2860
150.000	-.2960	-.2990	-.3050	-.2940	-.2880	-.2940
180.000	-.2950	-.2870		-.2980	-.2890	-.2760
210.000	-.2260	-.3060	-.3020	-.2950	-.2760	-.3090
240.000	-.3180	-.3180	-.3020	-.3000	-.3130	-.2930
270.000	-.3650	-.4020	-.3380	-.3240	-.3290	-.3080
300.000	-.3270	-.1870		-.3130	-.3370	-.3100
330.000	-.2310	.1750	-.0430	-.0320	-.3190	-.3020
360.000	.1810	.4030	.4300	.5980	-.2370	-.2940

MACH (1) = 1.202 ALPHA (2) = -4.038

SECTION (1)UPPER MPS NOZZLE DEPENDENT VARIABLE CP

X/DE	.0580	.2320	.4060	.5800	.7540	.9280
PHI						
.000	.1080	.2990	.3400	.4740	-.2440	-.2950
30.000	.2600	.3920	.4710	.4000	-.2460	-.3070
60.000	.5220	-.1260	-.3750	-.3570	-.3330	-.2730
90.000	-.4440	-.4500	-.4030	-.3120	-.2900	-.2940
120.000	-.2930		-.3060	-.2900	-.2950	-.2910
150.000	-.2820	-.3090	-.3000	-.2930	-.2370	-.2810
180.000	-.3040	-.2870		-.2920	-.2810	-.2750
210.000	-.2940	-.3020	-.2950	-.2850	-.2760	-.3070
240.000	-.3140	-.3130	-.2960	-.2850	-.3120	-.2980
270.000	-.3530	-.3550	-.3350	-.3150	-.3220	-.3020
300.000	-.3300	-.2020		-.3290	-.3240	-.3010
330.000	-.2380	-.0060	-.0990	-.1440	-.2980	-.2900
360.000	.1080	.2990	.3400	.4740	-.2440	-.2950

```
                                        CAL T14-053 IA36 02 + T1 + S1 UPPER MPS NOZZLE                    (RUFA05)
MACH  ( 1) =     1.203     ALPHA ( 3) =     -.011

 SECTION ( 1)UPPER MPS NOZZLE                     DEPENDENT VARIABLE CP

X/DE         .0580   .2320   .4060   .5800    7540   .9280

  PHI
    .000     .0180   .2130   .2370   .3890  -.2540  -.2850
  30.000     .2410   .3530   .3940   .3490  -.2470  -.3140
  60.000     .3380  -.1830  -.3590  -.3350  -.3060  -.2900
  90.000    -.4590  -.5270  -.3660  -.3130  -.2920  -.2960
 120.000    -.3030          -.3110  -.2910  -.2960  -.2920
 150.000    -.2820  -.3110  -.2910  -.2920  -.2910  -.2770
 180.000    -.3110  -.2900          -.2910  -.2750  -.2730
 210.000    -.2930  -.3030  -.2940  -.2800  -.2740  -.3110
 240.000    -.3130  -.3130  -.2960  -.2780  -.3150  -.2930
 270.000    -.3390  -.3270  -.3190  -.3130  -.3120  -.3030
 300.000    -.3120  -.1930          -.3270  -.3190  -.3000
 330.000    -.2790  -.1050  -.1550  -.2060  -.2880  -.2850
 360.000     .0180   .2130   .2370   .3890  -.2540  -.2850
MACH  ( 1) =     1.203     ALPHA ( 4) =     4.003

 SECTION ( 1)UPPER MPS NOZZLE                     DEPENDENT VARIABLE CP

X/DE         .0580   .2320   .4060   .5800   .7540   .9280

  PHI
    .000     .0200   .2140   .2150   .2920  -.2750  -.2920
  30.000     .1620   .2480   .2500   .2360  -.2600  -.3200
  60.000     .1560  -.1660  -.3590  -.3190  -.3160  -.3020
  90.000    -.4380  -.5310  -.3400  -.3200  -.3050  -.3040
 120.000    -.3220          -.3250  -.3050  -.3020  -.2970
 150.000    -.2780  -.3170  -.3070  -.3010  -.2970  -.2910
 180.000    -.3150  -.3030          -.2970  -.2930  -.2740
 210.000    -.3040  -.3140  -.2980  -.2900  -.2740  -.3160
 240.000    -.3150  -.3090  -.2990  -.2810  -.3200  -.3040
 270.000    -.3370  -.3530  -.3320  -.3130  -.3100  -.3010
 300.000    -.3210  -.2490          -.3480  -.3150  -.3080
 330.000    -.2640  -.1200  -.1810  -.2440  -.2970  -.3000
 360.000     .0200   .2140   .2150   .2920  -.2750  -.2920
```

```
                                         CAL T14-053 IA36 02 + T1 + S1 UPPER MPS NOZZLE                    (RUFA05)
MACH  ( 1) =     1.202    ALPHA ( 5) =     6.018

 SECTION ( 1)UPPER MPS NOZZLE                        DEPENDENT VARIABLE CP

X/DE          .0580    .2320    .4060    .5800    .7540    .9280

  PHI
     .000     .0830    .3030    .3250    .2260   -.2760   -.2940
   30.000     .1590    .1750    .1100    .1410   -.2730   -.3230
   60.000     .0610   -.0990   -.3260   -.3190   -.3220   -.3030
   90.000    -.4050   -.4580   -.3320   -.3250   -.3130   -.3010
  120.000    -.3210            -.3300   -.3120   -.3010   -.3040
  150.000    -.2800   -.3290   -.3160   -.3000   -.3020   -.2930
  180.000    -.3270   -.3120            -.3030   -.2920   -.2810
  210.000    -.3160   -.3110   -.2980   -.2920   -.2840   -.3290
  240.000    -.3060   -.3130   -.3010   -.2820   -.3310   -.3140
  270.000    -.3330   -.3510   -.3360   -.3180   -.3140   -.3020
  300.000    -.3340   -.2530            -.3700   -.3100   -.3130
  330.000    -.3210   -.0870   -.1580   -.2610   -.3030   -.2990
  360.000     .0830    .3030    .3250    .2260   -.2760   -.2940
```

CAL T14-053 IA36 02 + T1 + S1 UPPER MPS NOZZLE (RUFA06) (15 NOV 73)

PEFERENCE DATA

SREF = 49.4000 SQ.FT. XMRP = 158.0000 INCHES
LREF = 90.7000 INCHES YMRP = .0000 INCHES
BREF = 90.7000 INCHES ZMRP = .0000 INCHES
SCALE = .0190 SCALE

PARAMETRIC DATA

ALPHA = .000 POWER = .000
GP1 = 11.000 GY1 = -9.000
GP2 = .000 GY2 = -9.000
GP3 = .000 GY3 = .000

MACH (1) = 1.202 BETA (1) = -6.079

SECTION (1)UPPER MPS NOZZLE DEPENDENT VARIABLE CP

X/DE	.0580	.2320	.4060	.5800	.7540	.9280
PHI						
.000	-.1520	-.0090	.1020	-.1970	-.3010	-.2780
30.000	.0250	.2300	.3200	-.1210	-.2650	-.3170
60.000	-.1980	-.3540	-.3370	-.2810	-.3170	-.2960
90.000	-.4610	-.4320	-.2750	-.3110	-.2940	-.3100
120.000	-.2970		-.3160	-.2980	-.3070	-.2910
150.000	-.2760	-.3190	-.2950	-.3040	-.2950	-.2890
180.000	-.3170	-.2950		-.2920	-.2830	-.2770
210.000	-.3040	-.3050	-.3050	-.2910	-.2780	-.3190
240.000	-.3240	-.3150	-.2950	-.2840	-.3220	-.2980
270.000	-.3640	-.4020	-.3490	-.3100	-.2990	-.3150
300.000	-.2660	-.1430		-.2810	-.3150	-.2930
330.000	-.0910	.1870	.0570	-.0610	-.2710	-.2680
360.000	-.1520	-.0090	.1020	-.1970	-.3010	-.2780

MACH (1) = 1.202 BETA (2) = -3.051

SECTION (1)UPPER MPS NOZZLE DEPENDENT VARIABLE CP

X/DE	.0580	.2320	.4060	.5800	.7540	.9280
PHI						
.000	-.1120	.1140	.2100	.0710	-.2860	-.2680
30.000	.1070	.2480	.4300	.0810	-.2770	-.3160
60.000	-.0850	-.3310	-.3990	-.3160	-.3170	-.2930
90.000	-.4920	-.5160	-.3200	-.3210	-.2950	-.3040
120.000	-.3150		-.3170	-.2930	-.3000	-.2860
150.000	-.2810	-.3180	-.2890	-.2990	-.2850	-.2850
180.000	-.3170	-.2300		-.2820	-.2870	-.2700
210.000	-.2940	-.3040	-.3000	-.2890	-.2770	-.3200
240.000	-.3160	-.3030	-.2970	-.2850	-.3240	-.2930
270.000	-.3460	-.3670	-.3170	-.3110	-.3060	-.3050
300.000	-.3250	-.1930		-.2630	-.3430	-.2910
330.000	-.1460	.0220	.0700	-.0600	-.2940	-.2800
360.000	-.1120	.1140	.2100	.0710	-.2860	-.2680

```
                              CAL T14-053 IA36 O2 + T1 + S1 UPPER MPS NOZZLE                (RUFA06)

MACH  ( 1) =     1.202    BETA  ( 3) =      .000

 SECTION ( 1)UPPER MPS NOZZLE                    DEPENDENT VARIABLE CP

X/DE          .0580   .2320   .4060   .5800   .7540   .9280

  PHI
     .000     .0220   .2140   .0000   .4000  -.2540  -.2820
   30.000     .2300   .0000   .4070   .3520  -.2470  -.3120
   60.000     .0000  -.1910  -.3670  -.3350  -.3100  -.2890
   90.000    -.4400  -.5260  -.3550  -.3120  -.2870   .0000
  120.000    -.3050          -.3130  -.2890   .0000  -.2800
  150.000    -.2770  -.3090  -.2910   .0000  -.2800  -.2780
  180.000    -.3090  -.2800          -.2800  -.2770  -.2720
  210.000    -.2950   .0000   .0000  -.2820  -.2730  -.3120
  240.000     .0000  -.3050  -.2870  -.2810  -.3140  -.2910
  270.000    -.3350  -.3300  -.3080  -.3100  -.3070   .0000
  300.000    -.3110  -.1930          -.3270   .0000  -.2910
  330.000    -.2800  -.1180  -.1340   .0000  -.2870  -.2850
  360.000     .0220   .2140   .0000   .4000  -.2540  -.2820

MACH  ( 1) =     1.203    BETA  ( 4) =     3.051

 SECTION ( 1)UPPER MPS NOZZLE                    DEPENDENT VARIABLE CP

X/DE          .0580   .2320   .4060   .5800    7540   .9280

  PHI
     .000     .1390   .3370   .3210   .3560  -.1080  -.3090
   30.000     .3250   .3930   .3990   .3190  -.2580  -.3430
   60.000     .5240   .1510  -.3470  -.3900  -.3610  -.2970
   90.000    -.4750  -.5760  -.5250  -.3340  -.3040  -.3080
  120.000    -.3780          -.3310  -.3040  -.3040  -.3010
  150.000    -.2950  -.3390  -.3260  -.3060  -.3000  -.2920
  180.000    -.3310  -.2930          -.3010  -.2940  -.2800
  210 000    -.3040  -.3060  -.3140  -.2830  -.2820  -.3230
  240 000    -.3180  -.3010  -.2550  -.2840  -.3020  -.2530
  270 000    -.3420  -.3900  -.3120  -.3030  -.3090  -.3080
  300 000    -.2840  -.3010          -.3110  -.3300  -.3120
  330.000    -.3650  -.3230  -.4210  -.4230  -.3140  -.3160
  360.000     .1390   .3370   .3210   .3560  -.1080  -.3090
```

```
DATE 05 NOV 75              TABULATED DATA FOR CAL T14-053 (IA36)                                            PAGE 127

                                     CAL T14-053 IA36 02 + T1 + S1 UPPER MPS NOZZLE                 (RUFA05)

MACH  ( 1) =     1.203    BETA  ( 5) =     6.079

 SECTION ( 1)UPPER MPS NOZZLE                      DEPENDENT VARIABLE CP

X/DE          .0580    .2320    .4060    .5800    .7540    .9280

  PHI
     .000     .2110    .4340    .3990    .3840    .3820   -.3250
   30.000     .4750    .5500    .5260    .3850   -.2570   -.3430
   60.000     .7300    .4930   -.3430   -.3930   -.3690   -.3150
   90.000    -.4640   -.5880   -.5660   -.3320   -.3190   -.3140
  120.000    -.3650             -.3400   -.3220   -.3130   -.3060
  150.000    -.3080   -.3500   -.3330   -.3160   -.3080   -.2390
  180.000    -.3370   -.3110             -.3030   -.3020   -.2850
  210.000    -.3090   -.3090   -.3180   -.2980   -.2830   -.3290
  240.000    -.3130   -.3050   -.3030   -.2850   -.3270   -.3080
  270.000    -.3080   -.3100   -.3050   -.3080   -.3190   -.3120
  300.000    -.3610   -.3290             -.3540   -.3350   -.3300
  330.000    -.3950   -.4280   -.4760   -.4890   -.3580   -.3160
  360.000     .2110    .4340    .3990    .3840    .3820   -.3250
```

```
                                    CAL T14-053 IA36 02 + T1 + S1 UPPER MPS NOZZLE               (RUFA07)   ( 15 NOV 73  )

            REFERENCE DATA                                                                   PARAMETRIC DATA

SREF  =    49.4000 SQ.FT.   XMRP  =   158.0000 INCHES                          BETA   =      .000   POWER  =      1.000
LREF  =    90.7000 INCHES   YMRP  =      .0000 INCHES                          OPR    =    28.310   SRMPR  =      2.020
BREF  =    90.7000 INCHES   ZMRP  =      .0000 INCHES                          GP1    =    11.000   GY1    =     -9.000
SCALE =      .0190 SCALE                                                       GP2    =      .000   GY2    =     -9.000
                                                                               GP3    =      .000   GY3    =     -9.000

MACH  ( 1) =     1.199    ALPHA ( 1) =    -8.108

 SECTION ( 1)UPPER MPS NOZZLE               DEPENDENT VARIABLE CP

X/DE          .0580   .2320   .4060   .5800   .7540   .9280

  PHI
    .000      .1770   .3940   .4200   .6520  -.2380  -.3040
  30.000      .2970   .4200   .5350   .4830  -.2500  -.3030
  60.000      .5830  -.0500  -.4390  -.3960  -.3120  -.3070
  90.000     -.5750  -.5400  -.4510  -.3010  -.3020  -.3020
 120.000     -.4060          -.3100  -.3080  -.3210  -.2980
 150.000     -.3310  -.3350  -.2990  -.3040  -.2870  -.2930
 180.000     -.3200  -.2800          -.2320  -.2670  -.2510
 210.000     -.3000  -.3000  -.2480  -.2810  -.2640  -.3020
 240.000     -.3610  -.2790  -.2930  -.2640  -.3060  -.2970
 270.000     -.5550  -.4960  -.4230  -.2960  -.2930  -.3140
 300.000     -.3930  -.1840          -.3480  -.3800  -.3010
 330.000     -.2240   .0570   .0060   .0040  -.3400  -.3110
 360.000      .1770   .3940   .4200   .6520  -.2380  - 3040

MACH  ( 1) =     1.198    ALPHA ( 2) =    -4.075

 SECTION ( 1)UPPER MPS NOZZLE               DEPENDENT VARIABLE CP

X/DE          .0580   .2320   .4060   .5900   .7540   .9280

  PHI
    .000      .0910   .3150   .3170   .5160  -.2420  -.2790
  30.000      .2570   .3990   .4850   .4180  -.2320  -.3000
  60.000      .4560  -.1740  -.3760  -.3480  -.3170  -.2800
  90.000     -.5440  -.5290  -.3520  -.3000  -.2660  -.2970
 120.000     -.3900          -.3130  -.2830  -.2950  -.2730
 150.000     -.3010  -.3300  -.2890  -.2950  -.2950  -.2730
 180.000     -.3060  -.2750          -.2300  -.2620  -.2560
 210.000     -.2820  -.2870  -.2540  -.2810  -.2520  -.3020
 240.000     -.3120  -.2550  -.2720  -.2390  -.3140  -.2910
 270.000     -.4300  -.4270  -.3670  -.2880  - 2880  -.3140
 300.000     -.4030  -.1980          -.3550  -.3550  -.2900
 330.000     -.2290   .0180  -.0520  -.1570  -.2920  -.2820
 360.000      .0910   .3150   .3170   .5160  -.2420  -.2790
```

REP…
ORIGINAL PAGE IS POOR

```
                                    CAL T14-053 IA36 O2 + T1 + S1 UPPER MPS NOZZLE                 (RUFA07)

MACH  ( 1) =     1.197    ALPHA ( 3) =     -.023

 SECTION ( 1)UPPER MPS NOZZLE                 DEPENDENT VARIABLE CP

X/DE          .0580    .2320    .4050    .5800    .7540    .9280

  PHI
     .000     .0130    .2180    .2360    .4430   -.2560   -.2790
   30.000     .2280    .3580    .4210    .3490   -.2450   -.2920
   60.000     .2330   -.2460   -.3640   -.3320   -.3050   -.2940
   90.000    -.5060   -.5340   -.3320   -.2990   -.2320   -.2910
  120.000    -.3660            -.3110    .2930   -.2350   -.2730
  150.000    -.2930   -.3190   -.2920   -.2310   -.2810   -.2750
  180.000    -.3040   -.2700            -.2290   -.2550   -.2590
  210.000    -.2880   -.2850   -.2520   -.2560   -.2480   -.3000
  240.000    -.2870   -.2370   -.2640   -.2590   -.3080   -.3000
  270.000    -.4150   -.3870   -.3040   -.2770   -.2960   -.3220
  300.000    -.3890   -.2040            -.3530   -.3500   -.2810
  330.000    -.2790   -.0650   -.1100   -.2150   -.2690   -.2800
  360.000     .0130    .2180    .2360    .4430   -.2560   -.2790

MACH  ( 1) =     1.196    ALPHA ( 4) =     4.017

 SECTION ( 1)UPPER MPS NOZZLE                 DEPENDENT VARIABLE CP

X/DE          .0580    .2320    .4060    .5800    .7540    .9280

  PHI
     .000     .0000    .2250    .2170    .1890   -.2650   -.2930
   30.000     .1400    .2650    .2320    .2210   -.2760    .0000
   60.000     .0990   -.3260   -.3340   -.3400    .0000   -.2790
   90.000    -.4250   -.5220   -.3230    .0000   -.2840   -.2880
  120.000    -.3470             .0000   -.2890   -.3010   -.3170
  150.000    -.2930    .0000   -.2770   -.2800   -.3020   -.2610
  180.000     .0000   -.2390            -.2690   -.2530   -.2830
  210.000    -.2970   -.2920   -.2400   -.2530   -.2800    .0000
  240.000    -.2710   -.2930   -.3260   -.2900    .0000   -.2960
  270.000    -.3960   -.3500   -.2960    .0000   -.2920   -.3140
  300.000    -.3970   -.2690            -.3470   -.3420   -.2990
  330.000    -.3160    .0000   -.1290   -.2360   -.3070   -.2780
  360.000     .0000    .2250    .2170    .1890   -.2650   -.2930
```

```
                             CAL T14-053 IA36 O2 + T1 + S1 UPPER MPS NOZZLE                (RUFA07)

MACH  ( 1) =    1.200    ALPHA ( 5) =    6.028

 SECTION ( 1)UPPER MPS NOZZLE               DEPENDENT VARIABLE CP

X/DE          .0580    .2320    .4060    .5800    .7540    .9280

  PHI
     .000     .0000    .3200    .2980    .0580   -.2780   -.2680
   30.000     .1650    .1750    .1030    .1250   -.2570    .0000
   60.000     .0160   -.2770   -.3240   -.3070    .0000   -.2670
   90.000    -.3640   -.4610   -.2610    .0000   -.2720   -.2760
  120.000    -.3210             .0000   -.2830   -.2960   -.2990
  150.000    -.2630    .0000   -.2610   -.2740   -.2950   -.2680
  180.000     .0000   -.2150            -.2860   -.2670   -.2650
  210.000    -.2930   -.3050   -.2170   -.2780   -.2580    .0000
  240.000    -.2700   -.2840   -.3080   -.2580    .0000   -.2880
  270.000    -.3740   -.3510   -.2560    .0000   -.2870   -.3010
  300.000    -.3830   -.2470            -.3260   -.3180   -.2860
  330.000    -.3250    .0000   -.1270   -.2470   -.2980   -.2940
  360.000     .0000    .3200    .2980    .0580   -.2780   -.2680
```

```
                                   CAL T14-053 IA36 O2 + T1 + S1 UPPER MPS NOZZLE                  (RUFA08)    ( 15 NOV 73  )

              REFERENCE DATA                                                                          PARAMETRIC DATA

SREF  =     49.4000 SQ.FT.   XMRP  =   158.0000 INCHES                           ALPHA  =       .000   POWER  =     1.000
LREF  =     90.7000 INCHES   YMRP  =      .0000 INCHES                           OPR    =     28.310   SRMPR  =     2.020
BREF  =     90.7000 INCHES   ZMRP  =      .0000 INCHES                           GP1    =     11.000   GY1    =    -9.000
SCALE =       .0190 SCALE                                                        GP2    =       .000   GY2    =    -9.000
                                                                                 GP3    =       .000   GY3    =    -9.000

MACH  ( 1) =     1.194    BETA  ( 1) =    -6.074

 SECTION ( 1)UPPER MPS NOZZLE               DEPENDENT VARIABLE CP

X/DE           .0580   .2320   .4060   .5800   .7540   .9280

  PHI
     .000    -.1420   .0000   .1000  -.2730  -.3100  -.2920
   30.000     .0320   .2620   .1730  -.1360  -.2830  -.3130
   60.000    -.2410  -.3830  -.3480  -.2860  -.3230  -.3160
   90.000    -.4040  -.4510  -.2710  -.3160  -.3130  -.3280
  120.000    -.2960           -.3350  -.3220  -.3360  -.3080
  150.000    -.3200  -.3380  -.3280  -.3280  -.3100  -.2960
  180.000    -.2870  -.2510           -.2820  -.2870  -.2830
  210.000    -.3430  -.3340  -.2590  -.2850  -.2810  -.3170
  240.000    -.3300  -.2340  -.3180  -.2920  -.3130  -.3150
  270.000    -.4870  -.4410  -.3750  -.3260  -.3170  -.3300
  300.000    -.2730  -.1430           -.3150  -.3470  -.2960
  330.000    -.0930   .1970   .0850  -.0670  -.2510  -.2950
  360.000    -.1420   .0000   .1000  -.2730  -.3100  -.2920

MACH  ( 1) =     1.194    BETA  ( 2) =    -3.044

 SECTION ( 1)UPPER MPS NOZZLE               DEPENDENT VARIABLE CP

X/DE           .0580   .2320   .4060   .5800   .7540   .9280

  PHI
     .000     .0000   .1060   .2180  -.1130  -.2850  -.2990
   30.000     .1080   .2540   .4150   .1300  -.2950   .0000
   60.000    -.1360  -.4220  -.4140  -.3470   .0000  -.3230
   90.000    -.4930  -.5350  -.3330   .0000  -.3150  -.3220
  120.000    -.3060            .0000  -.3220  -.3260  -.3280
  150.000    -.3410   .0000  -.3250  -.3240  -.3270  -.2910
  180.000     .0000  -.2830           -.2670  -.2840  -.3030
  210.000    -.3300  -.3080  -.2630  -.2750  -.2900   .0000
  240.000    -.3220  -.2850  -.3180  -.2970   .0000  -.3220
  270.000    -.4810  -.4190  -.3340   .0000  -.3160  -.3300
  300.000    -.3340  -.2170           -.3010  -.3810  -.3120
  330.000    -.1520   .0000   .0910  -.1010  -.3280  -.2850
  360.000     .0000   .1060   .2180  -.1130  -.2850  -.2990
```

```
                                CAL T14-053 IA36 O2 + T1 + S1 UPPER MPS NOZZLE                (RUFA08)

MACH  ( 1) =     1.199    BETA  ( 3) =      .000

 SECTION ( 1)UPPER MPS NOZZLE                DEPENDENT VARIABLE CP

X/DE         .0580   .2320   .4060   .5800   .7540   .9280

  PHI
    .000     .0260   .2110   .2410   .2910  -.2470  -.2650
  30.000     .2220   .3620   .3680   .3650  -.2350  -.2690
  60.000     .2410  -.3310  -.3560  -.3190  -.2860  -.2980
  90.000    -.4710  -.5310  -.3200  -.2780  -.2990  -.2920
 120.000    -.3720          -.2880  -.2960  -.2930  -.2790
 150.000    -.2780  -.2840  -.2980  -.2690  -.2890  -.2620
 180.000    -.2650  -.2760          -.2570  -.2540  -.2460
 210.000    -.2910  -.2890  -.2520  -.2440  -.2380  -.2880
 240.000    -.2750  -.2580  -.2790  -.2480  -.2940  -.3010
 270.000    -.4080  -.3760  -.3020  -.2580  -.2960  -.3040
 300.000    -.3810  -.1900          -.3620  -.3390  -.2790
 330.000    -.2790  -.0590  -.1090  -.2160  -.2820  -.2760
 360.000     .0260   .2110   .2410   .2910  -.2470  -.2650

MACH  ( 1) =     1.195    BETA  ( 4) =     3.049

 SECTION ( 1)UPPER MPS NOZZLE                DEPENDENT VARIABLE CP

X/DE         .0580   .2320   .4060   .5800   .7540   .9280

  PHI
    .000     .1100   .3300   .3220   .4580  -.1510  -.3610
  30.000     .3000   .4000   .3500   .3350  -.2720  -.3110
  60.000     .4850  -.1230  -.3440  -.3950  -.3120  -.3010
  90.000    -.5000  -.5430  -.5310  -.2970  -.3110  -.3000
 120.000    -.3570          -.3030  -.3130  -.3100  -.2910
 150.000    -.3490  -.3170  -.3150  -.2360  -.2830  -.2760
 180.000    -.3080  -.3200          -.2370  -.2680  -.2820
 210.000    -.3270  -.2880  -.2570  -.2560  -.3120  -.3040
 240.000    -.3030  -.2790  -.2670  -.3710  -.3180  -.3200
 270.000    -.3150  -.3080  -.4460  -.2880  -.3230  -.3100
 300.000    -.4490  -.3200          -.3550  -.3320  -.2890
 330.000    -.3860  -.2210  -.4080  -.4020  -.3000  -.3000
 360.000     .1100   .3300   .3220   .4580  -.1510  -.3610
```

```
                                      CAL T14-053 IA36 02 + T1 + S1 UPPER MPS NOZZLE          (RUFA08)
MACH  ( 1) =    1.197   BETA  ( 5) =    6.079

 SECTION ( 1)UPPER MPS NOZZLE                DEPENDENT VARIABLE CP

X/DE         .0580   .2320   .4060   .5800   .7540   .9280

  PHI
    .000     .1960   .4380   .3950   .4190   .3120  -.3530
  30.000     .4840   .5630   .4730   .3820  -.2650  -.3110
  60.000     .7270   .1730  -.3440  -.4060  -.3130  -.3160
  90.000    -.5590  -.5860  -.5720  -.2950  -.3010  -.3010
 120.000    -.3780          -.3020  -.3060  -.3210  -.3100
 150.000    -.3860  -.3170  -.3080  -.3010  -.2820  -.2830
 180.000    -.3270  -.3340          -.2170  -.2550  -.2460
 210.000    -.3150  -.2900  -.2960  -.2560  -.2560  -.3100
 240.000    -.3090  -.2910  -.2660  -.2900  -.3370  -.2900
 270.000    -.3100  -.3020  -.2720  -.2720  -.3020  -.3090
 300.000    -.5150  -.4230          -.3320  -.3300  -.2840
 330.000    -.4140  -.3970  -.4650  -.4850  -.3100  -.3110
 360.000     .1960   .4380   .3950   .4190   .3120  -.3530
```

```
DATE 05 NOV 75             TABULATED DATA FOR CAL T14-053 (IA36)                                              PAGE  134

                                   CAL T14-053 IA36 O2 + T1 + S1 LOWER LH MPS NOZ.               (RUFB01)    ( 15 NOV 73  )

               REFERENCE DATA                                                                       PARAMETRIC DATA

SREF  =     49.4000 SQ.FT.   XMRP  =   158.0000 INCHES                                   BETA   =       .000  POWER  =      .000
LREF  =     90.7000 INCHES   YMRP  =      .0000 INCHES                                   GP1    =     11.000  GY1    =    -9.000
BREF  =     90.7000 INCHES   ZMRP  =      .0000 INCHES                                   GP2    =       .000  GY2    =    -9.000
SCALE =       .0190 SCALE                                                                GP3    =       .000  GY3    =      .000

MACH  ( 1) =      .901    ALPHA ( 1) =   -8.088

 SECTION ( 1)LOWER LH MPS NOZ.                DEPENDENT VARIABLE CP

X/DE          .0580   .2320   .4060   .5800   .7540   .9280

  PHI
    .000    -.2150  -.1990  -.1970  -.2020  -.1850  -.1860
  30.000    -.2040  -.2010  -.2000  -.1850  -.1830  -.2070
  60.000    -.1920  -.1920  -.1710  -.1800  -.2060  -.1950
  90.000    -.2020  -.1850  -.1810  -.2110  -.1980  -.1890
 120.000    -.1850  -.1840  -.2100  -.2060  -.1940  -.2000
 150.000    -.1800  -.2080  -.2020  -.1960  -.2060  -.1810
 180.000    -.2060  -.2040  -.1930  -.2050  -.1830  -.1790
 210.000    -.1930  -.1900  -.2050  -.1810  -.1800  -.2110
 240.000    -.2070  -.2000  -.1880  -.1830  -.2070  -.1920
 270.000    -.2010  -.1780  -.1860  -.2090  -.1890  -.1980
 300.000    -.1870  -.1910  -.2100  -.1970  -.1950  -.2010
 330.000    -.1940  -.2100  -.1970  -.1990  -.2020  -.1810
 360.000    -.2150  -.1990  -.1970  -.2020  -.1850  -.1860

MACH  ( 1) =      .900    ALPHA ( 2) =   -4.049

 SECTION ( 1)LOWER LH MPS NOZ.                DEPENDENT VARIABLE CP

X/DE          .0580   .2320   .4060   .5800   .7540   .9280

  PHI
    .000    -.2070  -.1950  -.2010  -.1980  -.1790  -.1760
  30.000    -.1930  -.2030  -.1980  -.1830  -.1780  -.2000
  60.000    -.1830  -.1890  -.1740  -.1790  -.2020  -.1910
  90.000    -.2020  -.1800  -.1710  -.2000  -.1970  -.1990
 120.000    -.1830  -.1780  -.2030  -.1950  -.2020  -.1980
 150.000    -.1830  -.1990  -.1990  -.2030  -.1940  -.1770
 180.000    -.2030  -.1920  -.2010  -.2000  -.1760  -.1720
 210.000    -.1930  -.2020  -.2010  -.1760  -.1740  -.2030
 240.000    -.1920  -.1940  -.1770  -.1760  -.2010  -.1810
 270.000    -.2040  -.1810  -.1810  -.2030  -.1840  -.1950
 300.000    -.1860  -.1770  -.2010  -.1650  -.1920  -.1950
 330.000    -.1970  -.2020  -.1870  -.1990  -.2020  -.1730
 360.000    -.2070  -.1950  -.2010  -.1980  -.1790  -.1760
```

```
                        CAL T14-053 IA36 O2 + T1 + S1 LOWER LH MPS NOZ.           (RUFB01)

MACH  ( 1) =      .900   ALPHA ( 3) =      .013

 SECTION ( 1)LOWER LH MPS NOZ.             DEPENDENT VARIABLE CP

X/DE         .0580   .2320   .4060   .5800   .7540   .9280

  PHI
    .000   -.2030  -.1730  -.1840  -.1850  -.1630  -.1550
  30.000   -.1740  -.1870  -.1830  -.1630  -.1570  -.1940
  60.000   -.1650  -.1780  -.1640  -.1580  -.1920  -.1730
  90.000   -.1840  -.1630  -.1600  -.1990  -.1700  -.1800
 120.000   -.1660  -.1670  -.1940  -.1720  -.1820  -.1830
 150.000   -.1600  -.1990  -.1770  -.1880  -.1800  -.1670
 180.000   -.1950  -.1740  -.1800  -.1800  -.1640  -.1590
 210.000   -.1650  -.1850  -.1770  -.1670  -.1600  -.1970
 240.000   -.1830  -.1830  -.1660  -.1590  -.2030  -.1780
 270.000   -.1920  -.1730  -.1620  -.1930  -.1740  -.1630
 300.000   -.1770  -.1640  -.1960  -.1740  -.1850  -.1850
 330.000   -.1700  -.1940  -.1760  -.1660  -.1870  -.1610
 360.000   -.2030  -.1730  -.1840  -.1850  -.1630  -.1550
MACH  ( 1) =      .899   ALPHA ( 4) =     4.005

 SECTION ( 1)LOWER LH MPS NOZ.             DEPENDENT VARIABLE CP

X/DE         .0580   .2320   .4060   .5800   .7540   .9280

  PHI
    .000   -.1970  -.1630  -.1850  -.1690  -.1590  -.1430
  30.000   -.1690  -.1920  -.1660  -.1470  -.1410  -.1880
  60.000   -.1710  -.1610  -.1520  -.1410  -.1690  -.1610
  90.000   -.1680  -.1470  -.1480  -.1920  -.1630  -.1830
 120.000   -.1480  -.1510  -.1930  -.1640  -.1880  -.1650
 150.000   -.1450  -.1900  -.1690  -.1810  -.1630  -.1570
 180.000   -.1850  -.1680  -.1830  -.1650  -.1460  -.1480
 210.000   -.1700  -.1860  -.1720  -.1510  -.1510  -.1900
 240.000   -.1830  -.1700  -.1490  -.1500  -.1940  -.1690
 270.000   -.1760  -.1440  -.1490  -.1910  -.1710  -.1870
 300.000   -.1690  -.1510  -.1890  -.1750  -.1800  -.1700
 330.000   -.1650  -.1930  -.1650  -.1810  -.1750  -.1560
 360.000   -.1970  -.1630  -.1850  -.1690  -.1590  -.1430
```

DATE 05 NOV 75 TABULATED DATA FOR CAL T14-053 (IA36) (RUFB01)

CAL T14-053 IA36 02 + T1 + S1 LOWER LH MPS NOZ.

MACH (1) = .899 ALPHA (5) = 6.006

SECTION (1)LOWER LH MPS NOZ. DEPENDENT VARIABLE CP

X/DE	.0580	.2320	.4060	.5800	.7540	.9280
PHI						
.000	-.1990	-.1540	-.1750	-.1770	-.1470	-.1530
30.000	-.1550	-.1750	-.1750	-.1520	-.1500	-.2000
60.000	-.1620	-.1690	-.1470	-.1450	-.1900	-.1450
90.000	-.1750	-.1570	-.1520	-.1800	-.1520	-.1740
120.000	-.1520	-.1570	-.1930	-.1520	-.1720	-.1750
150.000	-.1530	-.1950	-.1510	-.1670	-.1710	-.1500
180.000	-.1920	-.1540	-.1710	-.1770	-.1530	-.1560
210.000	-.1640	-.1720	-.1770	-.1570	-.1560	-.1920
240.000	-.1720	-.1860	-.1690	-.1570	-.2030	-.1590
270.000	-.1820	-.1610	-.1530	-.1990	-.1590	-.1720
300.000	-.1560	-.1580	-.2040	-.1580	-.1700	-.1790
330.000	-.1700	-.1940	-.1510	-.1740	-.1820	-.1420
360.000	-.1990	-.1540	-.1750	-.1770	-.1470	-.1530

```
DATE 05 NOV 75            TABULATED DATA FOR CAL T14-053 (IA36)                                                PAGE  137

                                      CAL T14-053 IA36 02 + T1 + S1 LOWER LH MPS NOZ.              (RUFB02)   ( 15 NOV 73  )

               REFERENCE DATA                                                                       PARAMETRIC DATA

SREF  =    49.4000 SQ.FT.   XMRP  =   158.0000 INCHES                                   ALPHA  =      .000   POWER  =      .000
LREF  =    90.7000 INCHES   YMRP  =      .0000 INCHES                                   GP1    =    11.000   GY1    =    -9.000
BREF  =    90.7000 INCHES   ZMRP  =      .0000 INCHES                                   GP2    =      .000   GY2    =    -9.000
SCALE =      .0190 SCALE                                                                GP3    =      .000   GY3    =      .000

MACH  ( 1) =      .901    BETA  ( 1) =    -6.079

 SECTION ( 1)LOWER LH MPS NOZ.                DEPENDENT VARIABLE CP

X/DE          .0580   .2320   .4060   .5800   .7540   .9280

  PHI
     .000    -.1940  -.1690  -.1900  -.1740  -.1750  -.1620
   30.000    -.1710  -.1940  -.1800  -.1620  -.1630  -.1870
   60.000    -.1970  -.1800  -.1650  -.1590  -.1910  -.1600
   90.000    -.1790  -.1680  -.1570  -.1990  -.1630  -.1860
  120.000    -.1650  -.1660  -.1950  -.1660  -.1930  -.1810
  150.000    -.1650  -.2000  -.1690  -.1930  -.1850  -.1660
  180.000    -.1660  -.1690  -.1920  -.1860  -.1630  -.1570
  210.000    -.1760  -.1890  -.1650  -.1620  -.1590  -.1880
  240.000    -.1890  -.1870  -.1590  -.1630  -.2010  -.1730
  270.000    -.1800  -.1610  -.1530  -.1930  -.1730  -.1930
  300.000    -.1680  -.1540  -.1910  -.1730  -.1650  -.1820
  330.000    -.1670  -.1930  -.1590  -.1950  -.1710  -.1700
  360.000    -.1940  -.1690  -.1900  -.1740  -.1750  -.1620
MACH  ( 1) =      .900    BETA  ( 2) =    -3.049

 SECTION ( 1)LOWER LH MPS NOZ.                DEPENDENT VARIABLE CP

X/DE          .0580   .2320   .4050   .5800   .7540   .9280

  PHI
     .000    -.1870  -.1570  -.1650  -.1710  -.1630  -.1480
   30.000    -.1540  -.1700  -.1650  -.1590  -.1550  -.1840
   60.000    -.1640  -.1630  -.1490  -.1420  -.1810  -.1570
   90.000    -.1760  -.1680  -.1600  -.1820  -.1530  -.1610
  120.000    -.1630  -.1650  -.1870  -.1690  -.1780  -.1690
  150.000    -.1580  -.1910  -.1720  -.1810  -.1730  -.1560
  180.000    -.1810  -.1700  -.1750  -.1780  -.1660  -.1550
  210.000    -.1680  -.1770  -.1690  -.1610  -.1580  -.1820
  240.000    -.1740  -.1720  -.1600  -.1560  -.1830  -.1590
  270.000    -.1720  -.1620  -.1550  -.1680  -.1590  -.1770
  300.000    -.1560  -.1630  -.1900  -.1600  -.1710  -.1740
  330.000    -.1510  -.1890  -.1710  -.1720  -.1770  -.1580
  360.000    -.1870  -.1570  -.1660  -.1710  -.1630  -.1480
```

```
                         CAL T14-053 IA36 02 + T1 + S1 LOWER LH MPS NOZ.          (PUFB02)

MACH  ( 1) =     .901    BETA  ( 3) =     .000

 SECTION ( 1)LOWER LH MPS NOZ.            DEPENDENT VARIABLE CP

X/DE          .0580   .2320   .4060   .5800   .7540   .9280

  PHI
    .000    -.1950  -.1740  -.1870  -.1750  -.1680  -.1530
  30.000    -.1710  -.1900  -.1720  -.1620  -.1580  -.1970
  60 ^00    -.1760  -.1670  -.1610  -.1550  -.1920  -.1720
  90.000    -.1750  -.1640  -.1590  -.1990  -.1740  -.1880
 120.000    -.1650  -.1650  -.1960  -.1790  -.1900  -.1710
 150.000    -.1580  -.1900  -.1790  -.1860  -.1750  -.1620
 180.000    -.1890  -.1780  -.1870  -.1710  -.1650  -.1590
 210.000    -.1800  -.1950  -.1790  -.1640  -.1610  -.1920
 240.000    -.1950  -.1800  -.1650  -.1570  -.1960  -.1710
 270.000    -.1820  -.1610  -.1600  -.1920  -.1730  -.1980
 300.000    -.1710  -.1630  -.2000  -.1740  -.1860  -.1770
 330.000    -.1660  -.1980  -.1770  -.1830  -.1750  -.1640
 360.000    -.1950  -.1740  -.1870  -.1750  -.1680  -.1580

MACH  ( 1) =     .900    BETA  ( 4) =    3.051

 SECTION ( 1)LOWER LH MPS NOZ.            DEPENDENT VARIABLE CP

X/DE          .0580   .2320   .4060   .5800   .7540   .9280

  PHI
    .000    -.2210  -.1930  -.2080  -.2030  -.1890  -.1840
  30.000    -.1920  -.2110  -.2030  -.1910  -.1820  -.2160
  60.000    -.2000  -.1970  -.1890  -.1830  -.2190  -.1930
  90.000    -.2020  -.1920  -.1650  -.2140  -.1900  -.2020
 120.000    -.1860  -.1850  -.2190  -.1910  -.2060  -.2010
 150.000    -.1880  -.2170  -.1920  -.2060  -.1960  -.1870
 180.000    -.2190  -.2020  -.2050  -.1900  -.1900  -.1850
 210.000    -.1980  -.2010  -.1930  -.1870  -.1870  -.2160
 240.000    -.2040  -.1930  -.1900  -.1840  -.2210  -.1960
 270.000    -.2200  -.1850  -.1830  -.2160  -.1940  -.1980
 300 000    -.2020  -.1950  -.2210  -.1930  -.2090  -.2070
 330.000    -.1970  -.2240  -.1990  -.2030  -.2040  -.1910
 360.000    -.2210  -.1930  -.2080  -.2030  -.1890  -.1840
```

```
                         CAL T14-053 IA36 02 + T1 + S1 LOWER LH MPS NOZ.          (RUFB02)

MACH  ( 1) =     .901    BETA  ( 5) =     6.089

 SECTION ( 1)LOWER LH MPS NOZ.             DEPENDENT VARIABLE CP

X/DE          .0580    .2320    .4060    .5800    .7540    .9280

  PHI
     .000    -.2410   -.2050   -.2380   -.2260   -.2160   -.2130
   30.000    -.2120   -.2300   -.2270   -.2130   -.2130   -.2240
   60.000    -.2220   -.2050   -.2060   -.2020   -.2280   -.2060
   90.000    -.2110   -.2030   -.1930   -.2260   -.2100   -.2290
  120.000    -.1930   -.2040   -.2220   -.2060   -.2220   -.2180
  150.000    -.2030   -.2230   -.2150   -.2280   -.2100   -.2000
  180.000    -.2340   -.2130   -.2000   -.2080   -.2020   -.1930
  210.000    -.2080   -.2170   -.2120   -.2000   -.2070   -.2330
  240.000    -.2270   -.2140   -.2020   -.2050   -.2330   -.2080
  270.000    -.2340   -.2090   -.2040   -.2300   -.2040   -.2250
  300.000    -.2260   -.2140   -.2300   -.2010   -.2310   -.2250
  330.000    -.2210   -.2360   -.2040   -.2400   -.2210   -.2120
  360.000    -.2410   -.2050   -.2380   -.2260   -.2160   -.2130
```

CAL T14-053 IA36 O2 + T1 + S1 LOWER LH MPS NOZ. (RUFB03) (15 NOV 73)

REFERENCE DATA

```
SREF  =    49.4000 SQ.FT.   XMRP  =   158.0000 INCHES
LREF  =    90.7000 INCHES   YMRP  =      .0000 INCHES
BREF  =    90.7000 INCHES   ZMRP  =      .0000 INCHES
SCALE =      .0190 SCALE
```

PARAMETRIC DATA

```
BETA  =      .000   POWER  =    1.000
CPR   =    36.200   SRMPR  =    2.330
GP1   =    11.000   GY1    =   -9.000
GP2   =      .000   GY2    =   -9.000
GP3   =      .000   GY3    =   -9.000
```

MACH (1) = .897 ALPHA (1) = -8.088

SECTION (1)LOWER LH MPS NOZ. DEPENDENT VARIABLE CP

X/DE	.0580	.2320	.4060	.5800	.7540	.9280
PHI						
.000	-.3190	-.2780	-.2760	-.2630	-.2640	-.2620
30.000	-.2800	-.2760	-.2630	-.2610	-.2600	-.3300
60.000	-.2700	-.2590	-.2580	-.2540	-.3320	-.2800
90.000	-.2890	-.2580	-.2570	-.3360	-.2900	-.2750
120.000	-.2630	-.2600	-.3340	-.2790	-.2740	-.2630
150.000	-.2230	-.3370	-.2810	-.2740	-.2560	-.2590
180.000	-.2900	-.2830	-.2860	-.2630	-.2520	-.2520
210.000	-.2770	-.2650	-.2770	-.2650	-.2520	-.3280
240.000	-.2960	-.2700	-.2750	-.2520	-.3300	-.2830
270.000	-.2770	-.2650	-.2510	-.3340	-.2830	-.2750
300.000	-.2620	-.2480	-.3270	-.2830	-.2770	-.2650
330.000	-.2650	-.3190	-.2770	-.2760	-.2590	-.2680
360.000	-.3190	-.2780	-.2760	-.2630	-.2640	-.2620

MACH (1) = .899 ALPHA (2) = -4.038

SECTION (1)LOWER LH MPS NOZ. DEPENDENT VARIABLE CP

X/DE	.0580	.2320	.4060	.5800	.7540	.9280
PHI						
.000	-.2490	-.2420	-.2580	-.2290	-.2370	-.2330
30.000	-.2450	-.2590	-.2300	-.2360	-.2250	-.2490
60.000	-.2570	-.2330	-.2360	-.2380	-.2450	-.2520
90.000	-.2450	-.2290	-.2280	-.2430	-.2510	-.2570
120.000	-.2350	-.2300	-.2430	-.2490	-.2590	-.2340
150.000	-.2150	-.2360	-.2520	-.2550	-.2330	-.2380
180.000	-.2340	-.2520	-.2590	-.2330	-.2370	-.2300
210.000	-.2540	-.2690	-.2370	-.2390	-.2340	-.2540
240.000	-.2760	-.2370	-.2450	-.2350	-.2550	-.2540
270.000	-.2300	-.2410	-.2330	-.2570	[illegible]	-.2550
300.000	-.2340	-.2300	-.2410	-.2510	-.2600	-.2500
330.000	-.2270	-.2390	-.2420	-.2600	-.2310	-.2430
360.000	-.2490	-.2420	-.2580	-.2290	-.2370	-.2330

IS POOR

```
                        CAL T14-053 IA36 02 + T1 + S1 LOWER LH MPS NOZ.          (RUFB07)

MACH  ( 1) =      .901    ALPHA ( 3) =      .001

 SECTION ( 1)LOWER LH MPS NOZ.              DEPENDENT VARIABLE CP

X/DE          .0580   .2320   .4060   .5800   .7540   .9280

  PHI
     .000    -.2300  -.2340  -.2370  -.2220  -.2290  -.2170
   30.000    -.2340  -.2410  -.2220  -.2280  -.2190  -.2340
   60.000    -.2330  -.2180  -.2260  -.2140  -.2260  -.2360
   90.000    -.2330  -.2200  -.2090  -.2280  -.2360  -.2340
  120.000    -.2230  -.2040  -.2130  -.2350  -.2390  -.2250
  150.000    -.1970  -.2130  -.2370  -.2340  -.2190  -.2260
  180.000    -.2160  -.2360  -.2350  -.2230  -.2210  -.2080
  210.000    -.2370  -.2430  -.2250  -.2260  -.2090  -.2350
  240.000    -.2450  -.2260  -.2250  -.2140  -.2390  -.2370
  270.000    -.2290  -.2170  -.2130  -.2300  -.2430  -.2420
  300.000    -.2270  -.2140  -.2260  -.2300  -.2300  -.2240
  330.000    -.2200  -.2220  -.2310  -.2370  -.2140  -.2320
  360.000    -.2300  -.2340  -.2370  -.2220  -.2230  -.2170

MACH  ( 1) =      .902    ALPHA ( 4) =     4.026

 SECTION ( 1)LOWER LH MPS NOZ.              DEPENDENT VARIABLE CP

X/DE          .0580   .2320   .4060   .5800   .7540   .9280

  PHI
     .000    -.2250  -.2190  -.2470  -.2170  -.2240  -.2050
   30.000    -.2270  -.2440  -.2150  -.2130  -.2100  -.2250
   60.000    -.2400  -.2130  -.2240  -.2010  -.2170  -.2250
   90.000    -.2220  -.2260  -.2010  -.2160  -.2240  -.2460
  120.000    -.2100  -.1970  -.2140  -.2190  -.2450  -.2150
  150.000    -.1950  -.2140  -.2200  -.2390  -.2080  -.2170
  180.000    -.2120  -.2210  -.2430  -.2100  -.2130  -.2010
  210.000    -.2320  -.2470  -.2100  -.2100  -.2010  -.2270
  240.000    -.2510  -.2110  -.2130  -.2330  -.2240  -.2320
  270.000    -.2250  -.2200  -.1980  -.2160  -.2350  -.2480
  300.000    -.2230  -.1980  -.2190  -.2310  -.2330  -.2230
  330.000    -.2110  -.2180  -.2170  -.2440  -.2200  -.2200
  360.000    -.2250  -.2190  -.2470  -.2170  -.2240  -.2050
```

```
                              CAL T14-053 IA36 02 + T1 + S1 LOWER LH MPS NOZ.          (RUFB03)
MACH  ( 1) =      .898    ALPHA ( 5) =    6.021

 SECTION ( 1)LOWER LH MPS NOZ.                 DEPENDENT VARIABLE CP

X/DE          .0580    .2320    .4060    .5800    .7540    .9280

  PHI
     .000    -.2670   -.2250   -.2280   -.2260   -.2410   -.2190
   30.000    -.2310   -.2260   -.2240   -.2370   -.2190   -.2690
   60.000    -.2210   -.2220   -.2360   -.2140   -.2640   -.2350
   90.000    -.2300   -.2290   -.2110   -.2620   -.2330   -.2240
  120.000    -.2310   -.2160   -.2500   -.2300   -.2230   -.2260
  150.000    -.2050   -.2550   -.2250   -.2210   -.2180   -.2320
  180.000    -.2570   -.2330   -.2220   -.2160   -.2250   -.2120
  210.000    -.2340   -.2250   -.2220   -.2230   -.2140   -.2670
  240.000    -.2300   -.2220   -.2220   -.2100   -.2670   -.2370
  270.000    -.2330   -.2190   -.2150   -.2650   -.2370   -.2240
  300.000    -.2390   -.2110   -.2650   -.2310   -.2220   -.2280
  330.000    -.2230   -.2590   -.2270   -.2220   -.2340   -.2320
  360.000    -.2670   -.2250   -.2280   -.2260   -.2410   -.2190
```

```
                              CAL T14-053 IA36 02 + T1 + S1 LOWER LH MPS NOZ.            (RUFB04)   ( 15 NOV 73  )

              REFERENCE DATA                                                                    PARAMETRIC DATA

SREF  =   49.4000 SQ.FT.   XMRP  =   158.0000 INCHES                         ALPHA  =      .000   POWER  =    1.000
LREF  =   90.7000 INCHES   YMRP  =      .0000 INCHES                         OPR    =    36.200   SRMPR  =    2.330
BREF  =   90.7000 INCHES   ZMRP  =      .0000 INCHES                         GP1    =    11.000   GY1    =   -9.000
SCALE =     .0190 SCALE                                                      GP2    =      .000   GY2    =   -9.000
                                                                             GP3    =      .000   GY3    =   -9.000

MACH  ( 1) =     .899   BETA  ( 1) =   -6.078

 SECTION ( 1)LOWER LH MPS NOZ.              DEPENDENT VARIABLE CP

X/DE         .0580   .2320   .4060   .5800   .7540   .9280

  PHI
     .000   -.2670  -.2570  -.2670  -.2430  -.2370  -.2220
   30.000   -.2640  -.2650  -.2450  -.2300  -.2170  -.2590
   60.000   -.2680  -.2440  -.2370  -.2260  -.2550  -.2490
   90.000   -.2660  -.2460  -.2220  -.2540  -.2520  -.2610
  120.000   -.2650  -.2520  -.2710  -.2630  -.2620  -.2390
  150.000   -.1910  -.2480  -.2600  -.2720  -.2500  -.2320
  180.000   -.1380  -.2350  -.2560  -.2500  -.2390  -.2210
  210.000   -.2300  -.2470  -.2440  -.2450  -.2340  -.2570
  240.000   -.2720  -.2630  -.2450  -.2330  -.2690  -.2490
  270.000   -.3090  -.2610  -.2310  -.2550  -.2430  -.2590
  300.000   -.2630  -.2290  -.2430  -.2420  -.2530  -.2420
  330.000   -.2470  -.2540  -.2490  -.2670  -.2340  -.2350
  360.000   -.2670  -.2570  -.2670  -.2430  -.2370  -.2220

MACH  ( 1) =     .900   BETA  ( 2) =   -3.049

 SECTION ( 1)LOWER LH MPS NOZ.              DEPENDENT VARIABLE CP

X/DE         .0580   .2320   .4060   .5800   .7540   .9280

  PHI
     .000   -.2410  -.2280  -.2350  -.2230  -.2140  -.2100
   30.000   -.2280  -.2390  -.2150  -.2180  -.2150  -.2450
   60.000   -.2410  -.2140  -.2180  -.2190  -.2410  -.2320
   90.000   -.2370  -.2170  -.2140  -.2360  -.2340  -.2330
  120.000   -.2320  -.2340  -.2520  -.2350  -.2380  -.2150
  150.000   -.1910  -.2360  -.2400  -.2470  -.2120  -.2170
  180.000   -.1570  -.2220  -.2420  -.2240  -.2130  -.2090
  210.000   -.2230  -.2350  -.2160  -.2260  -.2150  -.2490
  240.000   -.2530  -.2230  -.2250  -.2120  -.2460  -.2290
  270.000   -.2560  -.2140  -.2050  -.2330  -.2320  -.2370
  300.000   -.2380  -.2030  -.2290  -.2230  -.2320  -.2230
  330.000   -.2250  -.2420  -.2250  -.2370  -.2190  -.2160
  360.000   -.2410  -.2280  -.2350  -.2230  -.2140  -.2100
```

```
                         CAL T14-053 IA36 O2 + T1 + S1 LOWER LH MPS NOZ.          (RUFB04)

MACH  ( 1) =     .899   BETA  ( 3) =     .000

 SECTION ( 1)LOWER LH MPS NOZ.               DEPENDENT VARIABLE CP

X/DE         .0580   .2320   .4060   .5800   .7540   .9280

  PHI
     .000   -.2510  -.2320  -.2420  -.2270  -.2310  -.2250
   30.000   -.2390  -.2380  -.2250  -.2330  -.2220  -.2540
   60.000   -.2500  -.2280  -.2270  -.2220  -.2480  -.2460
   90.000   -.2310  -.2280  -.2190  -.2440  -.2420  -.2410
  120.000   -.2300  -.2150  -.2400  -.2400  -.2440  -.2240
  150.000   -.2050  -.2440  -.2380  -.2410  -.2210  -.2250
  180.000   -.2240  -.2390  -.2450  -.2250  -.2210  -.2160
  210.000   -.2380  -.2470  -.2280  -.2190  -.2140  -.2570
  240.000   -.2490  -.2280  -.2250  -.2150  -.2520  -.2400
  270.000   -.2310  -.2190  -.2140  -.2530  -.2400  -.2440
  300.000   -.2170  -.2110  -.2400  -.2420  -.2430  -.2230
  330.000   -.2280  -.2470  -.2310  -.2420  -.2290  -.2240
  360.000   -.2510  -.2320  -.2420  -.2270  -.2310  -.2250

MACH  ( 1) =     .898   BETA  ( 4) =    3.051

 SECTION ( 1)LOWER LH MPS NOZ.               DEPENDENT VARIABLE CP

X/DE         .0580   .2320   .4060   .5800   .7540   .9280

  PHI
     .000   -.2680  -.2620  -.2750  -.2490  -.2370  -.2440
   30.000   -.2670  -.2780  -.2440  -.2340  -.2440  -.2660
   60.000   -.2830  -.2490  -.2370  -.2420  -.2590  -.2630
   90.000   -.2710  -.25.0  -.2500  -.2700  -.2650  -.2700
  120.000   -.2460  -.2520  -.2700  -.2590  -.2730  -.2400
  150.000   -.2320  -.2700  -.2630  -.2660  -.2410  -.2330
  180.000   -.2560  -.2650  -.2670  -.2400  -.2350  -.2450
  210.000   -.2680  -.2680  -.2380  -.2340  -.2470  -.2530
  240.000   -.2810  -.2400  -.2330  -.2440  -.2600  -.2630
  270.000   -.2520  -.2410  -.2430  -.2680  -.2670  -.2720
  300.000   -.2270  -.2420  -.2640  -.2590  -.2730  -.2450
  330.000   -.2410  -.2590  -.2620  -.2730  -.2410  -.2390
  350.000   -.2680  -.2620  -.2750  -.2490  -.2370  -.2440
```

CAL T14-053 IA36 C2 + T1 + S1 LOWER LH MPS NOZ. (RUFB04)

MACH (1) = .899 BETA (5) = 6.088

SECTION (1)LOWER LH MPS NOZ. DEPENDENT VARIABLE CP

X/DE	.0580	.2320	.4060	.5800	.7540	.9280
PHI						
.000	-.2870	-.2730	-.2930	-.2650	-.2610	-.2710
30.000	-.3010	-.3070	-.2630	-.2780	-.2720	-.2810
60.000	-.2960	-.2650	-.2730	-.2730	-.2850	-.2830
90.000	-.3090	-.2890	-.2810	-.2880	-.2790	-.2920
120.000	-.2730	-.2780	-.2850	-.2810	-.2950	-.2550
150.000	-.2430	-.2860	-.2850	-.2900	-.2590	-.2600
180.000	-.2780	-.2800	-.2950	-.2610	-.2630	-.2630
210.000	-.2870	-.2950	-.2590	-.2590	-.2620	-.2790
240.000	-.3000	-.2660	-.2580	-.2590	-.2790	-.2800
270.000	-.2710	-.2580	-.2590	-.2790	-.2810	-.2860
300.000	-.2650	-.2690	-.2760	-.2810	-.2920	-.2620
330.000	-.2730	-.2750	-.2770	-.2880	-.2570	-.2620
360.000	-.2870	-.2730	-.2930	-.2650	-.2610	-.2710

```
                          CAL T14-053 IA36 02 + T1 + S1 LOWER LH MPS NOZ.            (RUFB05)   ( 15 NOV 73  )

            REFERENCE DATA                                                                PARAMETRIC DATA

SREF  =    49.4000 SQ.FT.   XMRP  =   158.0000 INCHES                  BETA  =      .000  POWER  =     .000
LREF  =    90.7000 INCHES   YMRP  =      .0000 INCHES                  GP1   =    11.000  GY1    =   -9.000
BREF  =    90.7000 INCHES   ZMRP  =      .0000 INCHES                  GP2   =      .000  GY2    =   -9.000
SCALE =      .0190 SCALE                                               GP3   =      .000  GY3    =     .000

MACH  ( 1) =    1.203    ALPHA ( 1) =   -8.101

 SECTION ( 1)LOWER LH MPS NOZ.                  DEPENDENT VARIABLE CP

X/DE          .0580    .2320    .4060    .5800    .7540    .9280

  PHI
    .000    -.2830   -.2850   -.2810   -.2890   -.2860   -.2720
  30.000    -.2630   -.2770   -.2910   -.2810   -.2670   -.2880
  60.000    -.2590   -.2980   -.2920   -.2660   -.2850   -.2650
  90.000    -.2980   -.2980   -.2740   -.2850   -.2730   -.2680
 120.000    -.2840   -.2730   -.2890   -.2750   -.2720   -.2880
 150.000    -.2630   -.2880   -.2750   -.2750   -.2860   -.2770
 180.000    -.2600   -.2750   -.2740   -.2870   -.2790   -.2640
 210.000    -.2800   -.2740   -.2850   -.2760   -.2570   -.2830
 240.000    -.2800   -.2820   -.2720   -.2640   -.2980   -.2850
 270.000    -.2960   -.2720   -.2640   -.2970   -.2810   -.2800
 300.000    -.2880   -.2640   -.3020   -.2820   -.2810   -.2910
 330.000    -.2670   -.2970   -.2820   -.2800   -.2910   -.2900
 360.000    -.2630   -.2860   -.2810   -.2890   -.2860   -.2720

MACH  ( 1) =    1.202    ALPHA ( 2) =   -4.038

 SECTION ( 1)LOWER LH MPS NOZ.                  DEPENDENT VARIABLE CP

X/DE          .0580    .2320    .4060    .5800    .7540    .9280

  PHI
    .000    -.2820   -.2770   -.2750   -.2870   -.2770   -.2740
  30.000    -.2640   -.2740   -.2910   -.2770   -.2740   -.2900
  60.000    -.2600   -.2860   -.2780   -.2690   -.2900   -.2650
  90.000    -.2950   -.2850   -.2740   -.2850   -.2680   -.2800
 120.000    -.2730   -.2770   -.2890   -.2740   -.2630   -.2800
 150.000    -.2610   -.2860   -.2760   -.2610   -.2770   -.2620
 180.000    -.2700   -.2770   -.2550   -.2810   -.2660   -.2610
 210.000    -.2820   -.2550   -.2800   -.2670   -.2610   -.3000
 240.000    -.2740   -.2780   -.2660   -.2600   -.3040   -.2840
 270.000    -.2840   -.2630   -.2610   -.3050   -.2840   -.2750
 300.000    -.2850   -.2600   -.3060   -.2840   -.2750   -.2930
 330.000    -.2690   -.2870   -.2810   -.2760   -.2920   -.2950
 360.000    -.2820   -.2770   -.2750   -.2870   -.2770   -.2740
```

CAL T14-053 IA36 02 + T1 + S1 LOWER LH MPS NOZ. (RUFB05)

MACH (1) = 1.203 ALPHA (3) = -.011

SECTION (1)LOWER LH MPS NOZ. DEPENDENT VARIABLE CP

X/DE	.0580	.2320	.4060	.5800	.7540	.9280
PHI						
.000	-.2790	-.2700	-.2740	-.2890	-.2770	-.2750
30.000	-.2590	-.2720	-.2900	-.2770	-.2740	-.2930
60.000	-.2570	-.2830	-.2760	-.2700	-.2940	-.2630
90.000	-.2810	-.2790	-.2740	-.2910	-.2660	-.2630
120.000	-.2660	-.2710	-.2870	-.2660	-.2630	-.2790
150.000	-.2570	-.2890	-.2650	-.2630	-.2780	-.2630
180.000	-.2730	-.2680	-.2680	-.2750	-.2630	-.2610
210.000	-.2760	-.2620	-.2780	-.2640	-.2590	-.2830
240.000	-.2750	-.2750	-.2630	-.2590	-.3060	-.2820
270.000	-.2900	-.2630	-.2610	-.3030	-.2820	-.2740
300.000	-.2800	-.2600	-.3070	-.2820	-.2750	-.2910
330.000	-.2690	-.2980	-.2740	-.2720	-.2900	-.2780
360.000	-.2790	-.2700	-.2740	-.2890	-.2770	-.2750

MACH (1) = 1.203 ALPHA (4) = 4.003

SECTION (1)LOWER LH MPS NOZ. DEPENDENT VARIABLE CP

X/DE	.0580	.2320	.4060	.5800	.7540	.9280
PHI						
.000	-.3000	-.2860	-.2830	-.2960	-.2930	-.2710
30.000	-.2680	-.2770	-.2990	-.2960	-.2740	-.2980
60.000	-.2650	-.2840	-.2920	-.2750	-.2950	-.2750
90.000	-.2810	-.2900	-.2720	-.2960	-.2720	-.2700
120.000	-.2790	-.2740	-.2930	-.2690	-.2670	-.2850
150.000	-.2650	-.2900	-.2730	-.2700	-.2800	-.2770
180.000	-.2680	-.2750	-.2710	-.2830	-.2760	-.2610
210.000	-.2840	-.2680	-.2840	-.2820	-.2520	-.2890
240.000	-.2930	-.2890	-.2800	-.2630	-.3140	-.2940
270.000	-.3010	-.2790	-.2650	-.3140	-.2940	-.2870
300.000	-.2920	-.2610	-.3120	-.2890	-.2950	-.3000
330.000	-.2740	-.3110	-.2690	-.2800	-.2960	-.2930
360.000	-.3000	-.2860	-.2830	-.2960	-.2930	-.2710

```
                                   CAL T14-053 IA36 02 + T1 + S1 LOWER LH MPS NOZ.            (RUFB05)

MACH  ( 1) =    1.202    ALPHA ( 5) =    6.018

 SECTION ( 1)LOWER LH MPS NOZ.              DEPENDENT VARIABLE CP

X/DE          .0580   .2320   .4060   .5800   .7540   .9280

  PHI
    .000   -.3090  -.3010  -.2870  -.3020  -.2950  -.2800
  30.000   -.2740  -.2850  -.3010  -.2960  -.2830  -.3060
  60.000   -.2610  -.2930  -.2850  -.2770  -.3090  -.2870
  90.000   -.2880  -.2930  -.2780  -.3080  -.2840  -.2710
 120.000   -.2760  -.2750  -.3050  -.2820  -.2710  -.2900
 150.000   -.2680  -.3020  -.2830  -.2710  -.2820  -.2750
 180.000   -.2880  -.2830  -.2710  -.2860  -.2750  -.2690
 210.000   -.2350  -.2670  -.2830  -.2780  -.2660  -.3040
 240.000   -.2950  -.2830  -.2780  -.2850  -.3200  -.3040
 270.000   -.3080  -.2780  -.2710  -.3210  -.3040  -.2870
 300.000   -.2980  -.2690  -.3210  -.3020  -.2880  -.3050
 330.000   -.2810  -.3210  -.2980  -.2870  -.3020  -.2940
 360.000   -.3090  -.3010  -.2870  -.3020  -.2950  -.2800
```

```
                                   CAL T14-053 IA36 02 + T1 + S1 LOWER LH MPS NOZ.                 (RUFBC6)    ( 15 NOV 73  )

                REFERENCE DATA                                                                         PARAMETRIC DATA

SREF  =    49.4000 SQ.FT.   XMRP  =    158.0000 INCHES                                      ALPHA  =      .000   POWER  =      .000
LREF  =    90.7000 INCHES   YMRP  =       .0000 INCHES                                      GP1    =    11.000   GY1    =    -9.000
BREF  =    90.7000 INCHES   ZMRP  =       .0000 INCHES                                      GP2    =      .000   GY2    =    -9.000
SCALE =      .0190 SCALE                                                                    GP3    =      .000   GY3    =      .000

MACH  ( 1) =      1.202     BETA  ( 1) =    -6.079

 SECTION ( 1)LOWER LH MPS NOZ.                    DEPENDENT  VARIABLE CP

X/DE          .0580   .2320   .4060   .5800   .7540   .9280

  PHI
    .000   -.2900  -.2810  -.2870  -.2880  -.2840  -.2740
  30.000   -.2720  -.2820  -.2920  -.2840  -.2740  -.2930
  60.000   -.2780  -.2630  -.2880  -.2760  -.2950  -.2700
  90.000   -.2640  -.2870  -.2770  -.2920  -.2700  -.2780
 120.000   -.2820  -.2780  -.2930  -.2730  -.2770  -.2840
 150.000   -.2690  -.2950  -.2740  -.2810  -.2830  -.2790
 180.000   -.2950  -.2720  -.2800  -.2800  -.2790  -.2670
 210.000   -.2820  -.2790  -.2830  -.2810  -.2660  -.3010
 240.000   -.2890  -.2840  -.2790  -.2670  -.3100  -.2840
 270.000   -.2920  -.2810  -.2560  -.3080  -.2840  -.2980
 300.000   -.2870  -.2650  -.3090  -.2660  -.2910  -.2920
 330.000   -.2800  -.3080  -.2830  -.2890  -.2920  -.2900
 360.000   -.2900  -.2810  -.2870  -.2880  -.2840  -.2740

MACH  ( 1) =      1.202     BETA  ( 2) =    -3.051

 SECTION ( 1)LOWER LH MPS NOZ.                    DEPENDENT  VARIABLE CP

X/DE          .0580   .2320   .4060   .5800   .7540   .9280

  PHI
    .000   -.2950  -.2780  -.2850  -.2870  -.2830  -.2780
  30.000   -.2630  -.2850  -.2880  -.2850  -.2830  -.2950
  60.000   -.2680  -.2890  -.2900  -.2770  -.2970  -.2610
  90.000   -.2790  -.2910  -.2790  -.2950  -.2640  -.2750
 120.000   -.2730  -.2830  -.2970  -.2630  -.2750  -.2780
 150.000   -.2650  -.2990  -.2630  -.2770  -.2790  -.2750
 180.000   -.2870  -.2670  -.2780  -.2800  -.2750  -.2660
 210.000   -.2770  -.2780  -.2790  -.2750  -.2650  -.3010
 240.000   -.2870  -.2760  -.2720  -.2660  -.3090  -.2760
 270.000   -.2950  -.2740  -.2640  -.3080  -.2820  -.2910
 300.000   -.2820  -.2630  -.3070  -.2810  -.2900  -.2860
 330.000   -.2750  -.3040  -.2780  -.2820  -.2840  -.2590
 360.000   -.2950  -.2780  -.2850  -.2870  -.2830  -.2780
```

```
                         CAL T14-053 IA35 02 + T1 + S1 LOWER LH MPS NOZ.          (RUFB06)

MACH  ( 1) =     1.202    BETA  ( 3) =      .000

 SECTION ( 1)LOWER LH MPS NOZ.              DEPENDENT VARIABLE CP

X/DE         .0580   .2320   .4060   .5800   .7540   .9280

  PHI
     .000   -.2780  -.2570   .0000  -.2810  -.2740  -.2720
   30.000   -.2530   .0000  -.2800  -.2750  -.2730  -.2910
   60.000    .0000  -.2770  -.2740  -.2880  -.2910  -.2580
   90.000   -.2690  -.2780  -.2720  -.2850  -.2580   .0000
  120.000   -.2700  -.2680  -.2960  -.2580   .0000  -.2700
  150.000   -.2560  -.2860  -.2580   .0000  -.2630  -.2700
  180.000   -.2870  -.2610   .0000  -.2720  -.2670  -.2590
  210.000   -.2730   .0000  -.2690  -.2660  -.2580  -.2820
  240.000    .0000  -.2690  -.2650  -.2560  -.3030  -.2750
  270.000   -.2790  -.2550  -.2550  -.2930  -.2750   .0000
  300.000   -.2730  -.2560  -.3030  -.2750   .0000  -.2800
  330.000   -.2620  -.2930  -.2720   .0000  -.2800  -.2740
  360.000   -.2780  -.2670   .0000  -.2810  -.2740  -.2720

MACH  ( 1) =     1.203    BETA  ( 4) =     3.051

 SECTION ( 1)LOWER LH MPS NOZ.              DEPENDENT VARIABLE CP

X/DE         .0580   .2320   .4060   .5800   .7540   .9280

  PHI
     .000   -.3050  -.2910  -.2850  -.2970  -.2920  -.2790
   30.000   -.2720  -.2840  -.2950  -.2940  -.2810  -.3030
   60.000   -.2500  -.2770  -.2860  -.2800  -.3030  -.2680
   90.000   -.2770  -.2310  -.2800  -.2990  -.2700  -.2730
  120.000   -.2800  -.2800  -.2860  -.2740  -.2750  -.2840
  150.000   -.2660  -.2950  -.2720  -.2770  -.2810  -.2790
  180.000   -.3010  -.2720  -.2750  -.2830  -.2620  -.2640
  210.000   -.2660  -.2740  -.2830  -.2820  -.2650  -.3060
  240.000   -.2830  -.2840  -.2830  -.2660  -.3170  -.2850
  270.000   -.3020  -.2880  -.2650  -.3170  -.2640  -.2850
  300.000   -.2370  -.2690  -.3150  -.2830  -.2840  -.3000
  330.000   -.2780  -.3110  -.2840  -.2840  -.2930  -.2940
  360.000   -.3050  -.2910  -.2850  -.2970  -.2920  -.2790
```

```
                                         CAL T14-053 IA36 O2 + T1 + S1 LOWER LH MPS NOZ.              (RUFB06)

MACH  ( 1) =     1.203   BETA  ( 5) =     6.079

 SECTION ( 1)LOWER LH MPS NOZ.                     DEPENDENT VARIABLE CP

X/DE          .0580   .2320   .4060   .5800   .7540   .9280

  PHI
     .000    -.3060  -.2960  -.2960  -.3030  -.2990  -.2650
   30.000    -.2890  -.2930  -.3040  -.3010  -.2840  -.3040
   60.000    -.2600  -.2920  -.3000  -.2850  -.3020  -.2770
   90.000    -.2690  -.3010  -.2940  -.3000  -.2760  -.2780
  120.000    -.2870  -.2910  -.3010  -.2830  -.2820  -.2890
  150.000    -.2740  -.2930  -.2810  -.2790  -.2890  -.2840
  180.000    -.3120  -.2770  -.2800  -.2900  -.2650  -.2730
  210.000    -.2890  -.2820  -.2900  -.2830  -.2700  -.3100
  240.000    -.2940  -.2940  -.2850  -.2720  -.3150  -.2920
  270.000    -.3070  -.2880  -.2700  -.3150  -.2930  -.2930
  300.000    -.3030  -.2740  -.3120  -.2930  -.2940  -.3050
  330.000    -.2920  -.3100  -.2930  -.2960  -.3010  -.2950
  360.000    -.3060  -.2980  -.2960  -.3030  -.2990  -.2850
```

```
                              CAL T14-053 1A36 02 + T1 + S1 LOWER LH MPS NOZ.            (RUFB07)    ( 15 NOV 73  )

              REFERENCE DATA                                                                    PARAMETRIC DATA

SREF  =     49.4000 SQ.FT.   XMRP  =    158.0000 INCHES                      BETA    =       .000   POWER  =     1.000
LREF  =     90.7000 INCHES   YMRP  =       .0000 INCHES                      CPR     =     28.310   SRMPR  =     2.020
BREF  =     90.7000 INCHES   ZMRP  =       .0000 INCHES                      GP1     =     11.000   GY1    =    -9.000
SCALE =       .0190 SCALE                                                    GP2     =       .000   GY2    =    -9.000
                                                                             GP3     =       .000   GY3    =    -9.000

MACH  ( 1) =     1.199    ALPHA ( 1) =    -8.108

 SECTION ( 1)LOWER LH MPS NOZ.                  DEPENDENT VARIABLE CP

X/DE          .0580   .2320   .4060   .5800   .7540   .9280

  PHI
     .000   -.2880  -.2970  -.2980  -.3060  -.2980  -.2710
   30.000   -.2900  -.3080  -.3100  -.3010  -.2730  -.2840
   60.000   -.3270  -.3340  -.3230  -.2900  -.3040  -.2820
   90.000   -.4480  -.3910  -.3410  -.3270  -.2950  -.2940
  120.000   -.3120  -.3050  -.3090  -.2830  -.2780  -.2740
  150.000   -.2330  -.2690  -.2760  -.2790  -.2750  -.2770
  180.000   -.2150  -.2680  -.2950  -.3000  -.2850  -.2630
  210.000   -.2480  -.2790  -.3100  -.3050  -.2780  -.2460
  240.000   -.2980  -.3070  -.3080  -.2900  -.3260  -.2990
  270.000   -.3620  -.3200  -.2940  -.3290  -.3030  -.2930
  300.000   -.3360  -.2810  -.3230  -.2910  -.2970  -.3060
  330.000   -.2850  -.3080  -.2880  -.2930  -.3010  -.2990
  360.000   -.2880  -.2970  -.2980  -.3060  -.2980  -.2710

MACH  ( 1) =     1.198    ALPHA ( 2) =    -4.075

 SECTION ( 1)LOWER LH MPS NOZ.                  DEPENDENT VARIABLE CP

X/DE          .0580   .2320   .4060   .5800   .7540   .9280

  PHI
     .000   -.2920  -.2820  -.2940  -.2820  -.2770  -.2670
   30.000   -.2710  -.2950  -.2930  -.2820  -.2700  -.2890
   60.000   -.3200  -.3250  -.3000  -.2850  -.3070  -.2750
   90.000   -.4310  -.3530  -.3220  -.3030  -.2760  -.2840
  120.000   -.2880  -.2920  -.2930  -.2590  -.2670  -.2650
  150.000   -.2100  -.2730  -.2700  -.2740  -.2700  -.2620
  180.000   -.2130  -.2540  -.2950  -.2930  -.2700  -.2560
  210.000   -.2250  -.2840  -.3050  -.2850  -.2670  -.2690
  240.000   -.3030  -.2920  -.2900  -.2820  -.3320  -.2890
  270.000   -.3430  -.2950  -.2800  -.3080  -.2850  -.2950
  300.000   [illegible]  -.2590  [illegible]  -.2780  -.2890  -.2960
  330.000   -.2750  -.3010  -.2760  -.2880  -.2840  -.2790
  360.000   -.2920  -.2820  -.2940  -.2820  -.2770  -.2670
```

```
                    CAL T14-053 IA36 O2 + T1 + S1 LOWER LH MPS NOZ.          (RUFB07)

MACH  ( 1) =    1.197    ALPHA ( 3) =    -.023

 SECTION ( 1)LOWER LH MPS NOZ.             DEPENDENT VARIABLE CP

X/DE          .0580   .2320   .4060   .5800   .7540   .9280

  PHI
    .000     -.2910  -.2800  -.2910  -.2720  -.2750  -.2710
  30.000     -.2780  -.2970  -.2810  -.2780  -.2710  -.2840
  60.000     -.3140  -.3180  -.2970  -.2930  -.3050  -.2770
  90.000     -.4110  -.3560  -.3200  -.3190  -.2730  -.2550
 120.000     -.2730  -.2870  -.2370  -.2620  -.2550  -.2610
 150.000     -.2000  -.2650  -.2740  -.2760  -.2650  -.2600
 180.000     -.1800  -.2770  -.3060  -.2830  -.2750  -.2580
 210.000     -.2530  -.2350  -.2980  -.2650  -.2710  -.2670
 240.000     -.3020  -.2970  -.2940  -.2850  -.3250  -.2860
 270.000     -.3350  -.2950  -.2600  -.3170  -.2680  -.2650
 300.000     -.2650  -.2520  -.3010  -.2810  -.2840  -.2810
 330.000     -.2770  -.2970  -.2780  -.2840  -.2680  -.2750
 360.000     -.2910  -.2800  -.2910  -.2720  -.2750  -.2710

MACH  ( 1) =    1.196    ALPHA ( 4) =    4.017

 SECTION ( 1)LOWER LH MPS NOZ.             DEPENDENT VARIABLE CP

X/DE          .0580   .2320   .4060   .5800   .7540   .9280

  PHI
    .000      .0000  -.2850  -.2930  -.3120  -.2670  -.2940
  30.000     -.2850  -.2960  -.3190  -.2710  -.2990   .0000
  60.000     -.3130  -.3370  -.2950  -.3070   .0000  -.2750
  90.000     -.4770  -.3360  -.3330   .0000  -.2730  -.2720
 120.000     -.2720  -.3370   .0000  -.2610  -.2570  -.2790
 150.000     -.2050   .0000  -.2670  -.2640  -.2810  -.2530
 180.000      .0000  -.2740  -.2880  -.3020  -.2610  -.2790
 210.000     -.2730  -.2940  -.3180  -.2760  -.2830   .0000
 240.000     -.3370  -.3380  -.2900  - 3050   .0000  -.2760
 270.000     -.3510  -.2810  -.2870   .0000  -.2820  -.2830
 300.000     -.2730  -.2790   .0000  -.2770  -.2790  -.3110
 330.000     -.2940   .0000  -.2730  -.2840  -.3130  -.2680
 360.000      .0000  -.2850  -.2930  -.3120  -.2670  -.2940
```

```
                                     CAL T14-053 IA36 02 + T1 + S1 LOWER LH MPS NOZ.               (RUF807)

MACH  ( 1) =    1.200    ALPHA ( 5) =    6.028

 SECTION ( 1)LOWER LH MPS NOZ.               DEPENDENT VARIABLE CP

X/DE          .0580    .2320    .4060    .5800    .7540    .9280

  PHI
    .000      .0000   -.2820   -.2760   -.2950   -.2840   -.2720
  30.000     -.2720   -.2900   -.3010   -.2850   -.2730    .0000
  60.000     -.2960   -.3140   -.3000   -.2800    .0000   -.2670
  90.000     -.4230   -.3570   -.2960    .0000   -.2620   -.2610
 120.000     -.3000   -.3050    .0000   -.2500   -.2480   -.2730
 150.000     -.1530    .0000   -.2530   -.2690   -.2740   -.2610
 180.000      .0000   -.2560   -.2820   -.2950   -.2710   -.2520
 210.000     -.2710   -.2830   -.3010   -.2830   -.2620    .0000
 240.000     -.2990   -.3220   -.2990   -.2730    .0000   -.2740
 270.000     -.3120   -.2880   -.2650    .0000   -.2760   -.2730
 300.000     -.2690   -.2560    .0000   -.2720   -.2750   -.2930
 330.000     -.2610    .0000   -.2720   -.2770   -.2360   -.2810
 360.000      .0000   -.2820   -.2760   -.2950   -.2840   -.2720
```

```
                                   CAL T14-053 IA36 02 - T1 + S1 LOWER LH MPS NOZ.          (RUF808)   ( 15 NOV 73  )

            REFERENCE DATA                                                                  PARAMETRIC DATA

SREF  =     49.4000 SQ.FT.    XMRP  =    158.0000 INCHES                      ALPHA   =      .000   POWER  =     1.000
LREF  =     90.7000 INCHES    YMRP  =       .0000 INCHES                      OPR     =    28.310   SRMPR  =     2.020
DREF  =     90.7000 INCHES    ZMRP  =       .0000 INCHES                      GP1     =    11.000   GY1    =    -9.000
SCALE =       .0190 SCALE                                                     GP2     =      .000   GY2    =    -3.000
                                                                              GP3     =      .000   GY3    =    -9.000

MACH  ( 1) =     1.194    BETA  ( 1) =    -6.07.

 SECTION ( 1)LOWER LH MPS NOZ.                    DEPENDENT VARIABLE CP

X/DE          .0580   .2320   .4060   .5800   .7540   .9280

  PHI
     .000   -.3200  -.3160  -.3160  -.3130  -.3020  -.2830
   30.000   -.3240  -.3310  -.3200  -.3070  -.2970  -.3020
   60.000   -.3570  -.3460  -.3340  -.3140  -.3150  -.3030
   90.000   -.5010  -.4540  -.3970  -.3580  -.3140  -.3080
  120.000   -.3710  -.3890  -.3550  -.3210  -.2980  -.2940
  150.000   -.2060  -.3040  -.3290  -.3140  -.2990  -.2910
  180.000   -.1430  -.2250  -.3030  -.3090  -.3080  -.2870
  210.000   -.2270  -.2700  -.3070  -.3110  -.3050  -.3210
  240.000   -.3320  -.3430  -.3530  -.3750  -.3590  -.3370
  270.000   -.4200  -.4010  -.3670  -.3910  -.3540  -.3260
  300.000   -.3930  -.3310  -.3670  -.3350  -.3240  -.3140
  330.000   -.3120  -.3330  -.3210  -.3180  -.3140  -.3040
  360.000   -.3200  -.3160  -.3160  -.3130  -.3020  -.2830

MACH  ( 1) =     1.194    BETA  ( 2) =    -3.044

 SECTION ( 1)LOWER LH MPS NOZ.                    DEPENDENT VARIABLE CP

X/DE          .0580   .2320   .4060   .5800   .7540   .9280

  PHI
     .000    .0000  -.3150  -.3100  -.3270  -.2920  -.3120
   30.000   -.3230  -.3190  -.3350  -.2980  -.3090   .0000
   60.000   -.3500  -.3770  -.3220  -.3340   .0000  -.3030
   90.000   -.5000  -.4200  -.4020   .0000  -.3130  -.3050
  120.000   -.3380  -.3740   .0000  -.3030  -.2960  -.3060
  150.000   -.1980   .0000  -.3170  -.3000  -.3100  -.2850
  180.000    .0000  -.2400  -.2990  -.3180  -.2950  -.3100
  210.000   -.2700  -.2910  -.3220  -.2970  -.3140   .0000
  240.000   -.3460  -.3570  -.3380  -.3270   .0000  -.3310
  270.000   -.4340  -.3720  -.3650   .0000  -.3330  -.3110
  300.000   -.3390  -.3200   .0000  -.3170  -.3090  -.3190
  330.000   -.3320   .0000  -.3130  -.3080  -.3270  -.2930
  360.000    .0000  -.3150  -.3100  -.3270  -.2920  -.3120
```

```
                                CAL T14-053 IA36 02 + T1 + S1 LOWER LH MPS NOZ.                  (RUFB08)

MACH  ( 1) =     1.199    BETA  ( 3) =       .000

 SECTION ( 1)LOWER LH MPS NOZ.                  DEPENDENT VARIABLE CP

X/DE          .0580   .2320   .4060   .5800   .7540   .9280

  PHI
     .000    -.2670  -.2910  -.2890  -.2850  -.2640  -.2520
   30.000    -.2850  -.2950  -.2880  -.2650  -.2560  -.2640
   60.000    -.3120  -.3170  -.2960  -.2750  -.2820  -.2830
   90.000    -.3900  -.3350  -.3070  -.2920  -.2830  -.2810
  120.000    -.2700  -.2880  -.2630  -.2670  -.2640  -.2650
  150.000    -.1930  -.2590  -.2720  -.2700  -.2710  -.2540
  180.000    -.1910  -.2770  -.2950  -.2900  -.2650  -.2550
  210.000    -.2500  -.2300  -.3020  -.2810  -.2640  -.2730
  240.000    -.3020  -.3000  -.2820  -.2760  -.2930  -.2940
  270.000    -.3340  -.2870  -.2670  -.2900  -.2920  -.2840
  300.000    -.2780  -.2460  -.2790  -.2820  -.2840  -.2790
  330.000    -.2590  -.2750  -.2810  -.2850  -.2820  -.2590
  360.000    -.2670  -.2910  -.2890  -.2850  -.2640  -.2520

MACH  ( 1) =     1.195    BETA  ( 4) =      3.049

 SECTION ( 1)LOWER LH MPS NOZ.                  DEPENDENT VARIABLE CP

X/DE          .0580   .2320   .4060   .5800   .7540   .9280

  PHI
     .000    -.2870  -.3090  -.2900  -.2890  -.2820  -.2930
   30.000    -.3050  -.2980  -.2910  -.2910  -.3280  -.2870
   60.000    -.3340  -.3310  -.3060  -.3890  -.2930  -.2970
   90.000    -.4510  -.3290  -.3810  -.3170  -.3080  -.2790
  120.000    -.2910  -.3560  -.3170  -.3040  -.2730  -.2660
  150.000    -.3000  -.2650  -.3060  -.2860  -.2710  -.2620
  180.000    -.2610  -.2850  -.2890  -.2850  -.2730  -.3650
  210.000    -.3270  -.3050  -.2930  -.2960  -.3530  -.3060
  240.000    -.3930  -.3100  -.2950  -.3340  -.3130  -.3070
  270.000    -.3130  -.2830  -.3110  -.3010  -.3070  -.2900
  300.000    -.2830  -.2920  -.2970  -.3000  -.2830  -.2830
  330.000    -.2930  -.2930  -.3000  -.2880  -.2840  -.2810
  360.000    -.2870  -.3090  -.2900  -.2890  -.2820  -.2930
```

```
DATE 05 NOV 75            TABULATED DATA FOR CAL T14-053 (IA36)

                               CAL T14-053 IA36 02 + T1 + S1 LOWER LH MPS NOZ.                (RJFB08)

MACH  ( 1) =     1.197    BETA  ( 5) =     6.079

 SECTION ( 1)LOWER LH MPS NOZ.                       DEPENDENT VARIABLE CP

X/DE          .0580   .2320   .4060   .5800   .7540   .9280

  PHI
     .000   -.2820  -.2930  -.2860  -.2880  -.3000  -.2820
   30.000   -.3060  -.2930  -.2910  -.2990  -.2920  -.2840
   60.000   -.3220  -.3280  -.3290  -.3150  -.3000  -.2850
   90.000   -.4450  -.3860  -.3590  -.3320  -.2960  -.2830
  120.000   -.2840  -.3220  -.3170  -.2880  -.2670  -.2740
  150.000   -.1940  -.2600  -.2860  -.2810  -.2730  -.2770
  180.000   -.2590  -.2760  -.2870  -.2890  -.2830  -.2920
  210.000   -.3270  -.3020  -.2970  -.3020  -.2930  -.2880
  240.000   -.3510  -.3120  -.3090  -.2980  -.3070  -.2930
  270.000   -.3040  -.2990  -.2850  -.2970  -.2830  -.2930
  300.000   -.3050  -.2750  -.2890  -.2880  -.2790  -.2810
  330.000   -.2840  -.2900  -.2910  -.2820  -.2850  -.2970
  360.000   -.2820  -.2930  -.2860  -.2880  -.3000  -.2820
```

```
                                   CAL T14-053 IA35 02 + T1 + S1 LOWER RH MPS NOZ.                (RUFC01)    ( 15 NOV 73  )

          REFERENCE DATA                                                                          PARAMETRIC DATA

SREF  =     49.4000 SQ.FT.   XMRP  =    158.0000 INCHES                            BETA    =       .000  POWER  =       .000
LREF  =     90.7000 INCHES   YMPP  =       .0000 INCHES                            GP1     =     11.000  GY1    =     -9.000
BREF  =     90.7000 INCHES   ZMPP  =       .0000 INCHES                            GP2     =       .000  GY2    =     -9.000
SCALE =       .0190 SCALE                                                          GP3     =       .000  GY3    =       .000

MACH   ( 1) =       .901    ALPHA ( 1) =    -8.088

 SECTION ( 1)LOWER RH MPS NOZ.                    DEPENDENT VARIABLE CP

X/DE          .0580   .2320   .4060   .5800   .7540   .9280

  PHI
    .000    -.2210  -.1590  -.2020  -.2120  -.1840  -.1920
  30.000    -.1130  -.1630  -.2130  -.1800  -.1860  -.2090
  60.000     .2310   .2940  -.0730  -.2020  -.2250  -.1980
  90.000    -.0640   .1900   .0880  -.2090  -.2130  -.1990
 120.000    -.2130  -.1740  -.2250  -.2100  -.1960  -.2090
 150.000            -.2420  -.2140          -.2040
 180.000    -.2090  -.2000  -.2030  -.1970  -.1770
 210.000    -.2000  -.1950  -.2030  -.1760  -.1860  -.2090
 240.000    -.1970  -.2050  -.1870  -.1860  -.2080  -.1950
 270.000    -.2020  -.1680  -.1940  -.2100  -.2010  -.1910
 300.000    -.1820  -.1990  -.2080  -.2110  -.1950  -.2000
 330.000    -.1510  -.2140  -.2160  -.2030  -.2050  -.1820
 360.000    -.2210  -.1590  -.2020  -.2120  -.1840  -.1820

MACH   ( 1) =       .900    ALPHA ( 2) =    -4.049

 SECTION ( 1)LOWER RH MPS NOZ.                    DEPENDENT VARIABLE CP

X/DE           0580   .2320   .4060   .5800   .7540   .9280

  PHI
    .000    -.2130  -.1870  -.2160  -.2060  -.1780  -.1760
  30.000    -.1120  -.1780  -.2100  -.1820  -.1820  -.2050
  60.000     .2180   .3150  -.0440  -.1990  -.2190  -.1930
  90.0 0    -.0500   .2100   .1510  -.2010  -.2040  -.2050
 120.000    -.2060  -.1610  -.2100  -.2290  -.2080  -.2060
 150.000            -.2360  -.2070          -.1990
 180.000    -.2030  -.1950  -.1960  -.2020  -.1810
 210.000    -.1890  -.1990  -.1930  -.1720  -.1740  -.2010
 240.000    -.1970  -.1980  -.1790  -.1820  -.2020  -.1920
 270.000    -.1930  -.1760  -.1830  -.2020  -.1970  -.2020
 300.000    -.1850  -.1880  -.2030  -.1990  -.2050  -.1950
 330.000    -.1650  -.2080  -.2070  -.2130  -.1950  -.1770
 360.000    -.2130  -.1670  -.2160  -.2060  -.1780  -.1760
```

```
                                   CAL T14-053 IA36 O2 + T1 + S1 LOWER RH MPS NOZ.             (RUFC01)

MACH  ( 1) =      .900    ALPHA ( 3) =      .013

 SECTION ( 1)LOWER RH MPS NOZ.               DEPENDENT VARIABLE CP

X/DE          .0580   .2320   .4060   .5800   .7540   .9280

  PHI
    .000    -.2130  -.1740  -.1950  -.1910  -.1670  -.1640
  30.000    -.1010  -.1750  -.1890  -.1760  -.1710  -.1990
  60.000     .1640   .3120  -.0030  -.1750  -.2210  -.1770
  90.000    -.0340   .1910   .1360  -.1740  -.2010  -.1910
 120.000    -.1830  -.1400  -.1850  -.2240  -.1990  -.1850
 150.000            -.2380  -.1960          -.1870
 180.000    -.1970  -.1770  -.1880  -.1850  -.1720
 210.000    -.1730  -.1810  -.1820  -.1410  -.1640  -.1940
 240.000    -.1780  -.1850  -.1630  -.1610  -.1890  -.1760
 270.000    -.1800  -.1660  -.1640  -.1990  -.1730  -.1810
 300.000    -.1730  -.1650  -.1960  -.1730  -.1850  -.1800
 330.000    -.1520  -.2100  -.1670  -.1990  -.1820  -.1660
 360.000    -.2130  -.1740  -.1950  -.1910  -.1670  -.1640

MACH  ( 1) =      .899    ALPHA ( 4) =     4.005

 SECTION ( 1)LOWER RH MPS NOZ.               DEPENDENT VARIABLE CP

X/DE          .0580   .2320   .4060   .5800   .7540   .9280

  PHI
    .000    -.2050  -.1710  -.1970  -.1740  -.1500  -.1510
  30.000    -.1090  -.1770  -.1830  -.1550  -.1620  -.1940
  60.000     .1780   .3340   .0140  -.1640  -.2110  -.1700
  90.000    -.0020   .2330   .1640  -.1520  -.1940  -.1920
 120.000    -.1580  -.1040  -.1640  -.2130  -.1990  -.1750
 150.000            -.2290  -.1900          -.1720
 180.000    -.1980  -.1720  -.1890  -.1700  -.1440
 210.000    -.1720  -.1600  -.1670  -.1610  -.1440  -.1880
 240.000    -.1790  -.1700  -.1600  -.1580  -.1900  -.1640
 270.000    -.1700  -.1550  -.1490  -.1910  -.1630  -.1800
 300.000    -.1540  -.1520  -.1950  -.1660  -.1850  -.1630
 330.000    -.1430  -.2020  -.1750  -.1840  -.1630  -.1560
 360.000    -.2050  -.1710  -.1970  -.1740  -.1500  -.1510
```

```
                                      CAL T14-053 IA36 O2 + T1 + S1 LOWER RH MPS NOZ.                  (RUFC01)

MACH  ( 1) =      .899    ALPHA ( 5) =    6.006

 SECTION ( 1)LOWER RH MPS NOZ.                  DEPENDENT VARIABLE CP

X/DE          .0580    .2320    .4060    .5800    .7540    .9280

  PHI
     .000    -.1950   -.1560   -.1810   -.1850   -.1580   -.1590
   30.000    -.1090   -.1560   -.1850   -.1610   -.1640   -.1940
   60.000     .1910    .3330   -.0150   -.1690   -.2190   -.1520
   90.000    -.0090    .2250    .1690   -.1680   -.1790   -.1790
  120.000    -.1690   -.1140   -.1740   -.2040   -.1840   -.1810
  150.000             -.2350   -.1760            -.1850
  180.000    -.2030   -.1580   -.1760   -.1740   -.1620
  210.000    -.1600   -.1750   -.1770   -.1490   -.1480   -.1990
  240.000    -.1700   -.1780   -.1450   -.1580   -.1890   -.1510
  270.000    -.1800   -.1510   -.1620   -.1830   -.1530   -.1730
  300.000    -.1580   -.1640   -.1920   -.1540   -.1710   -.1690
  330.000    -.1520   -.2060   -.1600   -.1710   -.1700   -.1490
  360.000    -.1350   -.1560   -.1810   -.1850   -.1580   -.1590
```

```
DATE 05 NOV 75              TABULATED DATA FOR CAL T14-053 (IA36)                                                  PAGE  161

                                    CAL T14-053 IA36 O2 + T1 + S1 LOWER RH MPS NOZ.                (RUFC02)    ( 15 NOV 73  )

               REFERENCE DATA                                                                          PARAMETRIC DATA

SREF   =      49.4000 SQ.FT.    XMRP   =    158.0000 INCHES                           ALPHA   =       .000   POWER   =       .000
LREF   =      90.7000 INCHES    YMRP   =       .0000 INCHES                           GP1     =     11.000   GY1     =     -9.000
BREF   =      90.7000 INCHES    ZMRP   =       .0000 INCHES                           GP2     =       .000   GY2     =     -9.000
SCALE  =        .0190 SCALE                                                           GP3     =       .000   GY3     =       .000

MACH   ( 1) =        .901     BETA   ( 1) =    -6.079

 SECTION ( 1)LOWER RH MPS NOZ.                   DEPENDENT VARIABLE CP

X/DE          .0580    .2320    .4060    .5800    .7540    .9280

  PHI
     .000    -.2090   -.1780   -.1940   -.1870   -.1610   -.1490
   30.000    -.1340   -.1790   -.1860   -.1660   -.1570   -.1900
   60.000     .1190    .1360   -.0920   -.1780   -.2120   -.1650
   90.000    -.0630    .1520    .0310   -.2050   -.1650   -.2020
  120.000    -.1800   -.1460   -.2170   -.2090   -.1940   -.1900
  150.000             -.2360   -.1810            -.1910
  180.000    -.1990   -.1790   -.1860   -.1770   -.1650
  210.000    -.1780   -.1880   -.1810   -.1660   -.1560   -.1890
  240.000    -.1970   -.1750   -.1710   -.1620   -.1930   -.1690
  270.000    -.1790   -.1780   -.1620   -.2020   -.1580   -.1890
  300.000    -.1660   -.1650   -.1960   -.1650   -.1910   -.1790
  330.000    -.1620   -.2010   -.1690   -.1900   -.1810   -.1650
  360.000    -.2090   -.1780   -.1940   -.1870   -.1610   -.1490

MACH   ( 1) =        .900     BETA   ( 2) =    -3.049

 SECTION ( 1)LOWER RH MPS NOZ.                   DEPENDENT VARIABLE CP

X/DE          .0580    .2320    .4060    .5800    .7540    .9280

  PHI
     .000    -.1810   -.1700   -.1760   -.1750   -.1610   -.1520
   30.000    -.1020   -.1560   -.1720   -.1600   -.1510   -.1810
   60.000     .1450    .1970   -.0410   -.1640   -.1990   -.1580
   90.000    -.0580    .1510    .0830   -.1760   -.1720   -.1750
  120.000    -.1720   -.1330   -.1890   -.1930   -.1740   -.1670
  150.000             -.2230   -.1630            -.1730
  180.000    -.1960   -.1610   -.1790   -.1720   -.1610
  210.000    -.1640   -.1760   -.1760   -.1580   -.1550   -.1880
  240.000    -.1750   -.1770   -.1570   -.1500   -.1850   -.1660
  270.000    -.1760   -.1650   -.1510   -.1950   -.1590   -.1650
  300.000    -.1710   -.1600   -.1890   -.1700   -.1770   -.1700
  330.000    -.1470   -.1910   -.1690   -.1820   -.1700   -.1550
  360.000    -.1810   -.1700   -.1760   -.1750   -.1610   -.1520
```

```
                              CAL T14-053 IA35 02 + T1 + S1 LOWER RH MPS NOZ.          (RUFC02)
MACH  ( 1) =     .901   BETA  ( 3) =     .000

 SECTION ( 1)LOWER PH MPS 'JOZ.                DEPENDENT VARIABLE CP

X/DE          .0580   .2320   .4060   .5800   .7540   .9280

  PHI
     .000    -.2150  -.1810  -.2100  -.1790  -.1680  -.1660
   30.000    -.0960  -.1730  -.1860  -.1720  -.1710  -.2020
   60.000     .1670   .3090  -.0060  -.1830  -.2120  -.1810
   90.000    -.0400   .2000   .1250  -.1690  -.1990  -.2070
  120.000    -.1830  -.1350  -.1950  -.2160  -.2050  -.1830
  150.000            -.2310  -.1870          -.1800
  180.000    -.1940  -.1740  -.1930  -.1770  -.1630
  210.000    -.1700  -.1850  -.1760  -.1630  -.1610  -.1960
  240.000    -.1860  -.1770  -.1620  -.1590  -.1920  -.1750
  270.000    -.1730  -.1680  -.1620  -.1980  -.1760  -.1890
  300.000    -.1680  -.1690  -.1970  -.1810  -.1320  -.1690
  330.000    -.1460  -.2000  -.1830  -.1930  -.1720  -.1620
  360.000    -.2150  -.1810  -.2100  -.1790  -.1680  -.1660
MACH  ( 1) =     .900   BETA  ( 4) =    3.051

 SECTION ( 1)LOWER RH MPS NOZ.                 DEPENDENT VARIABLE CP

X/DE          .0580   .2320   .4060   .5800   .7540   .9280

  PHI
     .000    -.2360  -.1860  -.2210  -.2120  -.2010  -.1960
   30.000    -.1230  -.1950  -.2130  -.2010  -.2020  -.2260
   60.000     .1890   .4130   .0480  -.2010  -.2430  -.2030
   90.000    -.0270   .2380   .2110  -.1700  -.2330  -.2150
  120.000    -.1940  -.1310  -.2090  -.2300  -.2220  -.2060
  150.000            -.2570  -.2310          -.2010
  180.000    -.2100  -.1930  -.2040  -.2100  -.1830
  210.000    -.1820  -.1990  -.2020  -.1550  -.1890  -.2170
  240.000    -.1990  -.1930  -.1890  -.1840  -.2140  -.1930
  270.000    -.1990  -.1840  -.1890  -.2140  -.1900  -.2030
  300.000    -.1920  -.1950  -.2210  -.1980  -.2100  -.2030
  330.000    -.1850  -.2380  -.2070  -.2140  -.1990  -.1920
  360.000    -.2360  -.1860  -.2210  -.2120  -.2010  -.1960
```

```
                                  CAL T14-053 IA36 O2 + T1 + S1 LOWER RH MPS NOZ.              (RUFC02)

MACH  ( 1) =     .901    BETA  ( 5) =    6.089

 SECTION ( 1)LOWER RH MPS NOZ.                DEPENDENT VARIABLE CP

X/DE         .0580   .2320   .4060   .5800   .7540   .9280

  PHI
     .000   -.2130  -.1650  -.2290  -.2270  -.2130  -.2130
   30.000   -.1020  -.1800  -.2330  -.2150  -.2240  -.2430
   60.000    .1810   .4920   .1670  -.2250  -.2610  -.2270
   90.000   -.0250   .2560   .2950  -.1440  -.2480  -.2440
  120.000   -.2060  -.1060  -.1750  -.2540  -.2620  -.2180
  150.000           -.2630  -.2620          -.2260
  180.000   -.2000  -.2170  -.2380  -.2320  -.2100
  210.000   -.1850  -.2200  -.2260  -.2020  -.2020  -.2230
  240.000   -.2280  -.2160  -.2050  -.2060  -.2270  -.2040
  270.000   -.2090  -.1940  -.2080  -.2290  -.2140  -.2310
  300.000   -.2160  -.2300  -.2350  -.2190  -.2330  -.2260
  330.000   -.2160  -.2600  -.2250  -.2500  -.2190  -.2110
  360.000   -.2130  -.1650  -.2290  -.2270  -.2130  -.2130
```

```
DATE 05 NOV 75          TABULATED DATA FOR CAL T14-053 (IA36)                                                  PAGE  164

                                  CAL T14-053 IA35 O2 + T1 + S1 LOWER RH MPS NOZ.              (RUFC03)    ( 15 NOV 73  )

              REFERENCE DATA                                                                   PARAMETRIC DATA

SREF  =    49.4000 SQ.FT.   XMRP  =   159.0000 INCHES                      BETA    =      .000   POWER   =      1.000
LREF  =    90.7000 INCHES   YMRP  =      .0000 INCHES                      CPR     =    36.200   SRMPR   =      2.330
BREF  =    90.7000 INCHES   ZMRP  =      .0000 INCHES                      GP1     =    11.000   GY1     =     -9.000
SCALE =      .0190 SCALE                                                   GP2     =      .000   GY2     =     -9.000
                                                                           GP3     =      .000   GY3     =     -9.000

MACH  ( 1) =      .897   ALPHA ( 1) =   -8.088

 SECTION ( 1)LOWER RH MPS NOZ.                  DEPENDENT VARIABLE CP

X/DE          .0580   .2320   .4060   .5800   .7540   .9280

  PHI
     .000   -.3490  -.2840  -.2960  -.2720  -.2630  -.2570
   30.000   -.2230  -.2690  -.2760  -.2710  -.2640  -.3410
   60.000    .2240   .3610  - 1150  -.2640  -.3600  -.2830
   90.000   -.1170   .2370   .0930  -.3140  -.3040  -.2840
  120.000   -.3840  -.2070  -.3200  -.3090  -.2830  -.2660
  150.000           -.3280  -.2980          -.2550
  180.000   -.2840  -.2720  -.2830  -.2750  -.2540
  210.000   -.2110  -.2750  -.2770  -.2670  -.2590  -.3270
  240.000   -.2520  -.2710  -.2680  -.2640  -.3330  -.2860
  270.000   -.3240  -.2630  -.2580  -.3370  -.2810  -.2840
  300.000   -.2480  -.2470  -.3340  -.2830  -.2790  -.2650
  330.000   -.2270  -.3410  -.2910  -.2780  -.2600  -.2600
  360.000   -.3490  -.2840  -.2960  -.2720  -.2630  -.2570

MACH  ( 1) =      .899   ALPHA ( 2) =   -4.038

 SECTION ( 1)LOWER RH MPS NOZ.                  DEPENDENT VARIABLE CP

X/DE          .0580   .2320   .4060   .5800   .7540   .9280

  PHI
     .000   -.2650  -.2610  -.2750  -.2480  -.2450  -.2320
   30.000   -.2240  -.2510  -.2450  -.2490  -.2450  -.2540
   60.000    .2020   .4000  -.0400  -.2470  -.2700  -.2510
   90.000   -.0330   .2320   .1680  -.2390  -.2780  -.2640
  120.000   -.3530  -.1950  -.2420  -.2850  -.2690  -.2320
  150.000           -.2560  -.2680          -.2260
  180.000   -.2050  -.2470  -.2720  -.2360  -.2330
  210.000   -.2020  -.2630  -.2450  -.2460  -.2310  -.2450
  240.000   -.2470  -.2380  -.2410  -.2320  -.2480  -.2560
  270.000   -.2700  -.2430  -.2330  -.2470  -.2500  -.2600
  300.000   -.2300  -.2210  -.2470  -.2510  -.2600  -.2350
  330.000   -.2200  -.2540  -.2600  -.2600  -.2370  -.2410
  360.000   -.2650  -.2610  -.2750  -.2480  -.2450  -.2320
```

```
                              CAL T14-053 IA35 O2 + T1 + S1 LOWER RH MPS NOZ.                (RUFC03)
MACH  ( 1) =      .901    ALPHA ( 3) =      .001

 SECTION ( 1)LOWER RH MPS NOZ.                     DEPENDENT VARIABLE CP

X/DE          .0580   .2320   .4060   .5800   .7540   .9280

  PHI
     .000    -.2520  -.2520  -.2600  -.2390  -.2300  -.2120
   30.000    -.2060  -.2320  -.2340  -.2350  -.2270  -.2210
   60.000     .1250   .3850   .0230  -.2210  -.2450  -.2370
   90.000    -.0920   .2200   .2130  -.2020  -.2660  -.2390
  120.000    -.3400  -.1560  -.2250  -.2790  -.2560  -.2040
  150.000            -.2440  -.2670          -.2150
  180.000    -.2070  -.2390  -.2490  -.2300  -.2190
  210.000    -.2140  -.2380  -.2310  -.2280  -.2130  -.2300
  240.000    -.2340  -.2320  -.2280  -.2200  -.2260  -.2420
  270.000    -.2490  -.2310  -.2220  -.2280  -.2380  -.2370
  300.000    -.2230  -.2130  -.2140  -.2370  -.2380  -.2250
  330.000    -.2180  -.2270  -.2420  -.2340  -.2210  -.2270
  360.000    -.2520  -.2520  -.2600  -.2390  -.2300  -.2120
MACH  ( 1) =      .902    ALPHA ( 4) =     4.026

 SECTION ( 1)LOWER RH MPS NOZ.                     DEPENDENT VARIABLE CP

X/DE          .0580   .2320   .4060   .5800   .7540   .9280

  PHI
     .000    -.2390  -.2420  -.2660  -.2280  -.2250  -.2050
   30.000    -.1960  -.2450  -.2270  -.2400  -.2230  -.2240
   60.000     .1460   .4050   .0160  -.2060  -.2470  -.2280
   90.000    -.0560   .2650   .2480  -.1680  -.2600  -.2480
  120.000    -.3180  -.1240  -.2110  -.2710  -.2620  -.2170
  150.000            -.2410  -.2710          -.2070
  180.000    -.2050  -.2410  -.2550  -.2250  -.2170
  210.000    -.2130  -.2450  -.2240  -.2260  -.1940  -.2190
  240.000    -.2490  -.2240  -.2200  -.2100  -.2160  -.2290
  270.000    -.2310  -.2240  -.2070  -.2160  -.2230  -.2470
  300.000    -.2170  -.2080  -.2170  -.2180  -.2450  -.2150
  330.000    -.2160  -.2250  -.2260  -.2430  -.2110  -.2180
  360.000    -.2390  -.2420  -.2660  -.2280  -.2250  -.2050
```

```
                                        CAL T14-053 IA36 C2 + T1 + S1 LOWER RH MPS NOZ.          (RUFC03)

MACH  ( 1) =      .898    ALPHA ( 5) =    6.021

 SECTION ( 1)LOWER RH MPS NOZ.             DEPENDENT VARIABLE CP

X/DE         .0580   .2320   .4060   .5800   .7540   .9280

  PHI
    .000   -.2830  -.2520  -.2540  -.2250  -.2300  -.2150
  30.000   -.2160  -.2340  -.2370  -.2410  -.2340  -.2660
  60.000    .1690   .3670   .0060  -.2210  -.2920  -.2360
  90.000   -.0530   .2530   .2150  -.2130  -.2680  -.2360
 120.000   -.3210  -.1320  -.2530  -.2810  -.2410  -.2280
 150.000           -.2870  -.2790          -.2180
 180.000   -.2590  -.2460  -.2260  -.2290  -.2160
 210.000   -.2300  -.2270  -.2290  -.2350  -.2110  -.2620
 240.000   -.2230  -.2300  -.2350  -.2180  -.2610  -.2390
 270.000   -.2390  -.2410  -.2190  -.2600  -.2320  -.2270
 300.000   -.2370  -.2200  -.2610  -.2290  -.2220  -.2220
 330.000   -.2340  -.2680  -.2320  -.2250  -.2210  -.2330
 360.000   -.2830  -.2520  -.2540  -.2250  -.2300  -.2150
```

```
DATE 05 NOV 75              TABULATED DATA FOR CAL T14-053 (IA36)                                                        PAGE  167

                                          CAL T14-053 IA36 02 + T1 + S1 LOWER RH MPS NOZ.              (RUFC04)    ( 15 NOV 73  )

                 REFERENCE DATA                                                                          PARAMETRIC DATA

SREF  =      49.4000 SQ.FT.   XMRP  =   158.0000 INCHES
LREF  =      90.7000 INCHES   YMRP  =      .0000 INCHES                            ALPHA  =       .000   POWER  =      1.000
BREF  =      90.7000 INCHES   ZMRP  =      .0000 INCHES                            OPR    =     36.200   SRMPR  =      2.330
SCALE =        .0190 SCALE                                                          GP1    =     11.000   GY1    =     -9.000
                                                                                    GP2    =       .000   GY2    =     -9.000
                                                                                    GP3    =       .000   GY3    =     -9.000

MACH  ( 1) =      .893    BETA  ( 1) =    -6.078

 SECTION ( 1)LOWER RH MPS NOZ.                   DEPENDENT VARIABLE CP

X/DE          .0580    .2320    .4060    .5800    .7540    .9280

  PHI
     .000    -.2820   -.2770   -.2580   -.2430   -.2260   -.2150
   30.000    -.2420   -.2480   -.2490   -.2390   -.2210   -.2490
   60.000     .1320    .2380   -.0690   -.2220   -.2710   -.2500
   90.000    -.1470    .1920    .1080   -.2380   -.2790   -.2590
  120.000    -.3810   -.1910   -.2610   -.3040   -.2560   -.2440
  150.000             -.3220   -.2880            -.2450
  180.000    -.2970   -.2650   -.2630   -.2510   -.2350
  210.000    -.2770   -.2730   -.2580   -.2440   -.2280   -.2600
  240.000    -.2800   -.2600   -.2530   -.2410   -.2630   -.2600
  270.000    -.2610   -.2550   -.2320   -.2550   -.2540   -.2580
  300.000    -.2330   -.2260   -.2510   -.2500   -.2540   -.2380
  330.000    -.2340   -.2570   -.2550   -.2530   -.2380   -.2230
  360.000    -.2820   -.2770   -.2580   -.2430   -.2260   -.2150

MACH  ( 1) =      .900    BETA  ( 2) =    -3.049

 SECTION ( 1)LOWER RH MPS NOZ.                   DEPENDENT VARIABLE CP

X/DL          .0580    .2320    .4060    .5800    .7540    .9280

  PHI
     .000    -.2570   -.2500   -.2540   -.2180   -.2080   -.2070
   30.000    -.2050   -.2280   -.2180   -.2180   -.2160   -.2420
   60.000     .1000    .2510   -.0280   -.2160   -.2610   -.2310
   90.000    -.1310    .1850    .1290   -.2110   -.2570   -.2400
  120.000    -.3530   -.1790   -.2440   -.2760   -.2400   -.2110
  150.000             -.2890   -.2640            -.2120
  180.000    -.2680   -.2420   -.2410   -.2330   -.2070
  210.000    -.2390   -.2450   -.2330   -.2210   -.2090   -.2450
  240.000    -.2460   -.2340   -.2230   -.2220   -.2430   -.2400
  270.000    -.2410   -.2230   -.2180   -.2390   -.2310   -.2340
  300.000    -.2200   -.2230   -.2370   -.2250   -.2340   -.2130
  330.000    -.2340   -.2440   -.2300   -.2340   -.2140   -.2100
  360.000    -.2570   -.2500   -.2540   -.2180   -.2080   -.2070
```

```
                                   CAL T14-053 IA36 O2 + T1 + S1 LOWER RH MPS NOZ.                 (RUFC04)

MACH  ( 1) =      .899    BETA  ( 3) =      .000

 SECTION ( 1)LOWER RH MPS NOZ.               DEPENDENT VARIABLE CP

X/DE          .0580   .2320   .4060   .5800   .7540   .9280

  PHI
     .000    -.2650  -.2590  -.2660  -.2430  -.2270   .2200
   30.000    -.2100  -.2380  -.2550  -.2380  -.2370  -.2520
   60.000     .1190   .3610   .0120  -.2240  -.2720  -.2360
   90.000    -.1020   .2190   .2010  -.2140  -.2730  -.2450
  120.000    -.3340  -.1580  -.2470  -.2840  -.2510  -.2270
  150.000            -.2530  -.2790          -.2200
  180.000    -.2300  -.2480  -.2520  -.2300  -.2190
  210.000    -.2160  -.2480  -.2320  -.2260  -.2140  -.2480
  240.000    -.2570  -.2370  -.2250  -.2240  -.2490  -.2490
  270.000    -.2420  -.2340  -.2240  -.2450  -.2420  -.2450
  300.000    -.2310  -.2180  -.2420  -.2390  -.2440  -.2240
  330.000    -.2290  -.2570  -.2450  -.2410  -.2260  -.2290
  360.000    -.2650  -.2590  -.2660  -.2430  -.2270  -.2200

MACH  ( 1) =      .899    BETA  ( 4) =     3.051

 SECTION ( 1)LOWER RH MPS NOZ.               DEPENDENT VARIABLE CP

X/DE          .0580   .2320   .4060   .5800   .7540   .9280

  PHI
     .000    -.2790  -.2770  -.2940  -.2650  -.2460  -.2530
   30.000    -.2190  -.2700  -.2580  -.2510  -.2740  -.2800
   60.000     .1590   .4640   .1000  -.2520  -.2970  -.2700
   90.000    -.0640   .2750   .2850  -.2030  -.3030  -.2720
  120.000    -.3160  -.1370  -.2270  -.2980  -.2940  -.2450
  150.000            -.2730  -.2820          -.2450
  180.000    -.1890  -.2420  -.2800  -.2680  -.2450
  210.000    -.1690  -.2450  -.2650  -.2480  -.2490  -.2650
  240.000    -.2540  -.2590  -.2550  -.2640  -.2640  -.2710
  270.000    -.3190  -.2610  -.2640  -.2720  -.2670  -.2770
  300.000    -.2130  -.2330  -.2640  -.2650  -.2760  -.2470
  330.000    -.2440  -.2830  -.2740  -.2690  -.2470  -.2400
  360.000    -.2790  -.2770  -.2940  -.2650  -.2460  -.2530
```

```
                                       CAL T14-053 IA36 O2 + T1 + S1 LOWER RH MPS NOZ.            (RUFC04)

MACH  ( 1) =     .899    BETA  ( 5) =    6.088

 SECTION ( 1)LOWER RH MPS NOZ.                 DEPENDENT VARIABLE CP

X/DE          .0580   .2320   .4060   .5800   .7540   .9280

  PHI
     .000    -.2850  -.3110  -.3220  -.2980  -.2880  -.2770
   30.000    -.1990  -.2840  -.2850  -.2830  -.2820  -.2940
   60.000     .1590   .5150   .2200  -.2650  -.3150  -.3100
   90.000    -.0570   .1880   .3920  -.1640  -.3170  -.2990
  120.000    -.3060  -.1140  -.2140  -.3190  -.3230  -.2780
  150.000            -.2980  -.3100          -.2910
  180.000    -.1730  -.2470  -.2930  -.2970  -.2750
  210.000    -.1590  -.2460  -.2650  -.2800  -.2730  -.2640
  240.000    -.2640  -.2790  -.2850  -.2900  -.2940  -.2880
  270.000    -.3530  -.3000  -.2680  -.2940  -.2840  -.2990
  300.000    -.2280  -.2400  -.2770  -.2830  -.3000  -.2680
  330.000    -.2770  -.3020  -.2920  -.3050  -.2680  -.2730
  360.000    -.2850  -.3110  -.3220  -.2980  -.2880  -.2770
```

```
                                  CAL T14-053 IA36 02 + T1 + S1 LOWER RH MPS NOZ.           (RUFC05)    ( 15 NOV 73  )

             REFERENCE DATA                                                                    PARAMETRIC DATA

SREF  =    49.4000 SQ.FT.   XMPP  =   158.0000 INCHES                          BETA   =      .000   POWER  =      .000
LREF  =    90.7000 INCHES   YMPP  =      .0000 INCHES                          GP1    =    11.000   GY1    =    -9.000
BPEF  =    90.7000 INCHES   ZMRP  =      .0000 INCHES                          GP2    =      .000   GY2    =    -9.000
SCALE =      .0190 SCALE                                                       GP3    =      .000   GY3    =      .000

MACH  ( 1) =     1.203    ALPHA ( 1) =    -8.101

 SECTION ( 1)LOWER RH MPS NOZ.              DEPENDENT VARIABLE CP

X/DE          .0580   .2320   .4060   .5800   .7540   .9280

  PHI
    .000    -.1950  -.2130  -.2370  -.2900  -.2920  -.2770
  30.000    -.0920  -.1040  -.2100  -.2650  -.2660  -.2950
  60.000     .3910   .4610  -.0020  -.2880  -.3130  -.3010
  90.000     .0130   .2050   .1180  -.2640  -.3180  -.2960
 120.000    -.2930  -.2420  -.2740  -.3280  -.2880  -.2390
 150.000            -.3020  -.2940          -.2960
 180.000    -.3050  -.2780  -.2760  -.3640  -.2840
 210.000    -.2820  -.2790  -.3230  -.2810  -.2570  -.2940
 240 000    -.2830  -.3000  -.2820  -.2740  -.2940  -.2770
 270.000    -.3080  -.2980  -.2810  -.2990  -.2870  -.2840
 300.000    -.2330  -.2810  -.3050  -.2890  -.2500  -.3060
 330.000    -.2460  -.3120  -.2720  -.2910  -.3020  -.2920
 360.000    -.1550  -.2130  -.2370  -.2900  -.2820  -.2770

MACH  ( 1) =     1.203    ALPHA ( 2) =    -4.038

 SECTION ( 1)LOWER RH MPS NOZ.              DEPENDENT VARIABLE CP

X/DE          .0580   .2320   .4060   .5800   .7540   .9280

  PHI
    .000    -.2850  -.2120  -.2480  -.2950  -.2750  -.2770
  30.000    -.1740  -.1740  -.2630  -.2750  -.2570  -.3090
  60.000     .3490   .3090  -.0950  -.2780  -.3140  -.2900
  90.000    -.0050   .1740   .0320  -.2840  -.3080  -.2830
 120.000    -.2790  -.2520  -.2970  -.3030  -.2790  -.2960
 150.000            -.3090  -.2790          -.2990
 180.000    -.3070  -.2750  -.2700  -.3550  -.2730
 210.000    -.2810  -.2700  -.3150  -.2740  -.2570  -.2970
 240.000    -.2730  -.2990  -.2780  -.2680  -.2980  -.2770
 270.000    -.3000  -.2890  -.2770  -.2980  -.2810  -.2740
 300.000    -.2850  -.2810  -.3010  -.2870  -.2810  -.2900
 330.000    -.2440  -.3110  -.2770  -.2870  -.2940  -.2750
 360.000     .2850  -.2120  -.2480  -.2950  -.2750  -.2770
```

CAL T14-053 IA36 C2 + T1 + S1 LOWER RH MPS NOZ. (RUFC05)

MACH (1) = 1.203 ALPHA (3) = -.011

SECTION (1)LOWER RH MPS NOZ. DEPENDENT VARIABLE CP

X/DE	.0580	.2320	.4060	.5800	.7540	.9280
PHI						
.000	-.3030	-.2320	-.2730	-.2900	-.2750	-.2740
30.000	-.2110	-.2100	-.2790	-.2770	-.2700	-.3040
60.000	.2230	.1700	-.1610	-.2820	-.3160	-.2790
90.000	-.0130	.1450	-.0380	-.2930	-.2830	-.2850
120.000	-.2700	-.2490	-.3040	-.2800	-.2720	-.2900
150.000		-.3040	-.2720		-.2960	
180.000	-.3060	-.2720	-.2720	-.3380	-.2770	
210.000	-.2720	-.2750	-.3080	-.2710	-.2700	-.2990
240.000	-.2690	-.2950	-.2710	-.2680	-.3000	-.2730
270.000	-.2940	-.2800	-.2720	-.3030	-.2770	-.2750
300.000	-.2810	-.2790	-.3000	-.2780	-.2780	-.2900
330.000	-.2390	-.3100	-.2770	-.2840	-.2890	-.2750
360.000	-.3030	-.2320	-.2730	-.2900	-.2750	-.2740

MACH (1) = 1.203 ALPHA (4) = 4.003

SECTION (1)LOWER RH MPS NOZ. DEPENDENT VARIABLE CP

X/DE	.0580	.2320	.4060	.5800	.7540	.9280
PHI						
.000	-.3110	-.2420	-.2790	-.2940	-.2890	-.2750
30.000	-.2590	-.2600	-.2850	-.2890	-.2740	-.3110
60.000	.1420	.0580	-.2250	-.2800	-.3160	-.2890
90.000	.0100	.1100	-.0990	-.3250	-.2910	-.2880
120.000	-.2650	-.2400	-.3190	-.2890	-.2810	-.3040
150.000		-.3020	-.2840		-.3050	
180.000	-.3130	-.2850	-.2800	-.3280	-.2970	
210.000	-.2790	-.2790	-.3080	-.2830	-.2710	-.3070
240.000	-.2800	-.2960	-.2840	-.2690	-.3020	-.2850
270.000	-.2910	-.2900	-.2720	-.3060	-.2850	-.2830
300.000	-.2980	-.2800	-.3030	-.2910	-.2810	-.2940
330.000	-.2500	-.3110	-.2970	-.2860	-.2950	-.2910
360.000	-.3110	-.2420	-.2790	-.2940	-.2890	-.2750

```
                                       CAL T14-053 IA36 02 + T1 + S1 LOWER RH MPS NOZ.            (RUFC05)

MACH  ( 1)  =     1.202    ALPHA ( 5) =     6.018

 SECTION ( 1)LOWER RH MPS NOZ.               DEPENDENT VARIABLE CP

X/DE          .0580   .2320   .4060   .5800   .7540   .9280

  PHI
     .000   -.3210  -.2730  -.2760  -.2960  -.2890  -.2800
   30.000   -.2730  -.2660  -.2930  -.2840  -.2790  -.3220
   60.000    .0640  -.0280  -.2550  -.2840  -.3270  -.3010
   90.000    .0000   .0820  -.1350  -.3390  -.3010  -.2920
  120.000   -.2540  -.2400  -.3280  -.2990  -.2870  -.3090
  150.000           -.2930  -.2950          -.3090
  180.000   -.3180  -.2970  -.2780  -.3290  -.2820
  210.000   -.2930  -.2790  -.3110  -.2850  -.2750  -.3150
  240.000   -.2790  -.3050  -.2880  -.2790  -.3140  -.2960
  270.000   -.3010  -.2940  -.2790  -.3170  -.2970  -.2820
  300.000   -.2950  -.2870  -.3180  -.3010  -.2850  -.3000
  330.000   -.2570  -.3220  -.3040  -.2840  -.3000  -.2920
  360.000   -.3210  -.2730  -.2760  -.2960  -.2890  -.2800
```

```
DATE 05 NOV 75            TABULATED DATA FOR CAL T14-053 (IA36)                                                        PAGE  173

                                          CAL T14-053 IA36 O2 + T1 + S1 LOWER RH MPS NOZ.                 (RUFC06)    ( 15 NOV 73  )

                 REFERENCE DATA                                                                                 PARAMETRIC DATA

SREF  =     49.4000 SQ.FT.    XMRP  =   158.0000 INCHES                                     ALPHA   =       .000   POWER   =       .000
LREF  =     90.7000 INCHES    YMRP  =      .0000 INCHES                                     GP1     =     11.000   GY1     =     -9.000
BREF  =     90.7000 INCHES    ZMRP  =      .0000 INCHES                                     GP2     =       .000   GY2     =     -9.000
SCALE =       .0190 SCALE                                                                   GP3     =       .000   GY3     =       .000

MACH  ( 1) =     1.202    BETA  ( 1) =   -6.079

 SECTION ( 1)LOWER RH MPS NOZ.                DEPENDENT VARIABLE CP

X/DE          .0580    .2320    .4060    .5800    .7540    .9280

  PHI
     .000    -.3050   -.2780   -.2900   -.2900   -.2860   -.2760
   30.000    -.2570   -.3010   -.2960   -.2840   -.2740   -.3070
   60.000     .0680   -.0300   -.2850   -.2780   -.3110   -.2820
   90.000    -.0950    .0070   -.1580   -.3330   -.2760   -.2910
  120.000    -.2830   -.2700   -.3220   -.2800   -.2290   -.2950
  150.000             -.3060   -.2790            -.2930
  180.000    -.3030   -.2800   -.2950   -.3310   -.2840
  210.000    -.2840   -.2920   -.3070   -.2910   -.2750   -.3040
  240.000    -.2920   -.3010   -.2900   -.2780   -.3050   -.2810
  270.000    -.2950   -.2910   -.2800   -.3050   -.2800   -.2900
  300.000    -.2890   -.2760   -.3030   -.2810   -.2860   -.2910
  330.000    -.2740   -.3040   -.2800   -.2890   -.2900   -.2860
  360.000    -.3060   -.2780   -.2900   -.2900   -.2860   -.2760

MACH  ( 1) =     1.202    BETA  ( 2) =   -3.051

 SECTION ( 1)LOWER RH MPS NOZ.                DEPENDENT VARIABLE CP

X/DE          .0580    .2320    .4060    .5800    .7540    .9280

  PHI
     .000    -.3090   -.2560   -.2850   -.2890   -.2840   -.2720
   30.000    -.2380   -.2340   -.2910   -.2820   -.2720   -.3060
   60.000     .1240    .0560   -.2410   -.2790   -.3120   -.2750
   90.000    -.0810    .0600   -.1380   -.3310   -.2760   -.2900
  120.000    -.2820   -.2650   -.1230   -.2730   -.2890   -.2950
  150.000             -.3120   -.2600            -.2930
  180.000    -.3060   -.2720   -.2900   -.2640   -.2930
  210.000    -.2740   -.2830   -.2830   -.2820   -.2760   -.3030
  240.000    -.2840   -.2930   -.2640   -.2730   -.3030   -.2740
  270.000    -.2910   -.2950   -.2750   -.3040   -.2760   -.2850
  300.000    -.2860   -.2730   -.3020   -.2740   -.2850   -.2860
  330.000    -.2700   -.3070   -.2750   -.2850   -.2890   -.2870
  360.000    -.3090   -.2560   -.2850   -.2890   -.2840   -.2720
```

```
                                      CAL T14-053 IA36 02 + T1 + S1 LOWER RH MPS NOZ.                (RUFC06)

MACH  ( 1) =    1.202    BETA  ( 3) =     .000

 SECTION ( 1)LOWER RH MPS NOZ.               DEPENDENT VARIABLE CP

X/DE          .0580   .2320   .4060   .5800   .7540   .9280

  PHI
    .000    -.2980  -.2140   .0000  -.2860  -.2780  -.2710
  30.000    -.2270   .0000  -.2740  -.2780  -.2710  -.3030
  60.000     .0000   .1760  -.1700  -.2790  -.3110  -.2730
  90.000    -.0270   .1440  -.0500  -.2990  -.2760   .0000
 120.000    -.2630  -.2470  -.3050  -.2720   .0000  -.2900
 150.000            -.3010  -.2640          -.2890
 180.000    -.3040  -.2640   .0000  -.3210  -.2710
 210.000    -.2630   .0000  -.2940  -.2710  -.2650  -.2970
 240.000     .0000  -.2800  -.2710  -.2640  -.2970  -.2680
 270.000    -.2850  -.2810  -.2750  -.2960  -.2700   .0000
 300.000    -.2840  -.2750  -.2990  -.2790   .0000  -.2810
 330.000    -.2410  -.3040  -.2750   .0000  -.2820  -.2780
 360.000    -.2980  -.2140   .0000  -.2860  -.2780  -.2710

MACH  ( 1) =    1.203    BETA  ( 4) =    3.051

 SECTION ( 1)LOWER RH MPS NOZ.               DEPENDENT VARIABLE CP

X/DE          .0580   .2320   .4060   .5800   .7540   .9280

  PHI
    .000    -.2950  -.2340  -.2750  -.2980  -.2970  -.2810
  30.000    -.2210  -.2370  -.2650  -.2860  -.2810  -.3150
  60.000     .3110   .3360  -.0740  -.2880  -.3250  -.2920
  90.000     .0510   .1990   .0780  -.2850  -.3050  -.2920
 120.000    -.2600  -.2360  -.2810  -.3110  -.2890  -.2970
 150.000            -.3270  -.2970          -.2980
 180.000    -.3220  -.2820  -.2950  -.3020  -.2930
 210.000    - 2630  -.2840  -.2970  -.2900  -.2770  -.3100
 240.000    -.2730  -.2950  -.2910  -.2980  -.3100  -.2800
 270.000    -.2830  -.2860  -.2620  -.3100  -.2840  -.2850
 300.000    -.3030  -.2970  -.3150  -.2970  -.2900  -.2940
 330.000    -.2820  -.3260  -.2730  -.3020  -.2930  -.2930
 360.000    -.2950  -.2340  -.2750  -.2980  -.2970  -.2810
```

CAL T14-053 IA36 02 + T1 + S1 LOWER RH MPS NOZ. (RUFC06)

MACH (1) = 1.203 BETA (5) = 6.079

SECTION (1)LOWER RH MPS NOZ. DEPENDENT VARIABLE CP

X/DE	.0580	.2320	.4060	.5800	.7540	.9280
PHI						
.000	-.3180	-.2590	-.2470	-.3060	-.3030	-.2880
30.000	-.2290	-.2260	-.2390	-.2770	-.2830	-.3180
60.000	.3290	.4490	.0150	-.2770	-.3280	-.3040
90.000	.0750	.2300	.1920	-.2510	-.3240	-.3040
120.000	-.2300	-.2130	-.2470	-.3220	-.3040	-.3090
150.000		-.3230	-.3080		-.3060	
180.000	-.3260	-.2930	-.3090	-.3790	-.2940	
210.000	-.2860	-.2920	-.3340	-.2930	-.2850	-.3110
240.000	-.2840	-.3000	-.2970	-.2850	-.3100	-.2900
270.000	-.3020	-.3010	-.2910	-.3130	-.2930	-.2910
300.000	-.3180	-.3000	-.3210	-.3070	-.2970	-.3020
330.000	-.2990	-.3230	-.2610	-.3060	-.3100	-.3050
360.000	-.3180	-.2590	-.2470	-.3060	-.3030	-.2880

```
                                       CAL T14-053 IA36 02 + T1 + S1 LOWER RH MPS NOZ.               (RUFC07)    ( 15 NOV 73  )

                 REFERENCE DATA                                                                           PARAMETRIC DATA

SREF  =    49.4000 SQ.FT.   XMRP  =   158.0000 INCHES                            BETA    =      .000  POWER   =     1.000
LREF  =    90.7000 INCHES   YMRP  =      .0000 INCHES                            OPR     =    28.310  SRMPR   =     2.020
BREF  =    90.7000 INCHES   ZMRP  =      .0000 INCHES                            GP1     =    11.000  GY1     =    -9.000
SCALE =      .0190 SCALE                                                         GP2     =      .000  GY2     =    -9.000
                                                                                 GP3     =      .000  GY3     =    -9.000

MACH  ( 1) =     1.199    ALPHA ( 1) =    -8.108

 SECTION ( 1)LOWER RH MPS NOZ.               DEPENDENT VARIABLE CP

X/DE         .0580    .2320    .4060    .5800    .7540    .9280

  PHI
     .000   -.3780   -.3280   -.3200   -.3130   -.2930   -.2740
   30.000   -.0670   -.2460   -.2830   -.2990   -.2760   -.2930
   60.000    .3670    .4410   -.0140   -.2640   -.3040   -.2810
   90.000    .0120    .2220    .1130   -.2820   -.2820   -.2830
  120.000   -.2700   -.2170   -.2700   -.3070   -.2850   -.2920
  150.000            -.2750   -.2850            -.2920
  180.000   -.2090   -.2490   -.2930   -.3410   -.2780
  210.000   -.2040   -.2610   -.3190   -.3090   -.2710   -.2870
  240.000   -.2650   -.3100   -.3230   -.3100   -.3050   -.2850
  270.000   -.4510   -.4050   -.3590   -.3670   -.3090   -.3080
  300.000   -.3280   -.3300   -.3460   -.3100   -.3110   -.3050
  330.000   -.3280   -.3440   -.3020   -.3060   -.3040   -.2940
  360.000   -.3780   -.3280   -.3200   -.3130   -.2930   -.2740

MACH  ( 1) =     1.198    ALPHA ( 2) =    -4.075

 SECTION ( 1)LOWER RH MPS NOZ.               DEPENDENT VARIABLE CP

X/DE         .0580    .2320    .4060    .5800    .7540    .9280

  PHI
     .000   -.3540   -.3090   -.3010   -.2910   -.2710   -.2630
   30.000   -.1970   -.2700   -.2990   -.2800   -.2620   -.2900
   60.000    .3160    .3100   -.1010   -.2700   -.2900   -.2710
   90.000    .0090    .1940    .0350   -.3230   -.2750   -.2770
  120.000   -.2480   -.2240   -.3130   -.2820   -.2770   -.2850
  150.000            -.2760   -.2700            -.2780
  180.000   -.2150   -.2350   -.2890   -.3100   -.2600
  210.000   -.1950   -.2600   -.2910   -.2930   -.2620   -.2970
  240.000   -.2580   -.2920   -.2910   -.2920   -.3140   -.2800
  270.000   -.4390   -.3660   -.2630   -.3690   -.2920   -.2980
  300.000   -.3040   -.3370   -.3450   -.2940   -.2990   -.2890
  330.000   -.2860   -.3310   -.2950   -.2930   -.2970   -.2750
  360.000   -.3540   -.3090   -.3010   -.2910   -.2710   -.2630
```

```
                                       CAL T14-053 IA36 02 + T1 + S1 LOWER RH MPS NOZ.                  (RUFC07)

MACH  ( 1) =     1.197    ALPHA ( 3) =     -.023

 SECTION ( 1)LOWER RH MPS NOZ.                   DEPENDENT VARIABLE CP

X/DE          .0580   .2320   .4060   .5800   .7540   .9280

  PHI
     .000    -.3210  -.2890  -.2950  -.2780  -.2740  -.2650
   30.000    -.2550  -.2710  -.2840  -.2670  -.2660  -.2780
   60.000     .2100   .1820  -.1600  -.2810  -.2800  -.2820
   90.000     .0120   .1640  -.0400  -.3150  -.2770  -.2890
  120.000    -.2360  -.2280  -.3150  -.2780  -.2840  -.2790
  150.000            -.2500  -.2710          -.2750
  180.000    -.2020  -.2540  -.2820  -.2690  -.2670
  210.000    -.1930  -.2650  -.2730  -.2790  -.2700  -.2920
  240.000    -.2520  -.2840  -.2830  -.2870  -.3070  -.2710
  270.000    -.4260  -.3730  -.3410  -.3550  -.2840  -.2980
  300.000    -.3080  -.2950  -.3250  -.3000  -.2930  -.2780
  330.000    -.2730  -.3040  -.2910  -.2940  -.2780  -.2730
  360.000    -.3210  -.2890  -.2950  -.2780  -.2740  -.2650
MACH  ( 1) =     1.196    ALPHA ( 4) =     4.017

 SECTION ( 1)LOWER RH MPS NOZ.                   DEPENDENT VARIABLE CP

X/DE          .0580   .2320   .4060   .5800   .7540   .9280

  PHI
     .000     .0000  -.2750  -.2730  -.2960  -.2660  -.2850
   30.000    -.2320  -.2680  -.2900  -.2590  -.2840   .0000
   60.000     .1360  -.0160  -.2220  -.2950   .0000  -.2720
   90.000    -.0010   .1370  -.0950   .0000  -.2690  -.2770
  120.000    -.2020  -.2300   .0000  -.2730  -.2720  -.2910
  150.000             .0000  -.2640          -.2090
  180.000     .0000  -.2320  -.2760  -.3140  -.2680
  210.000    -.1250  -.2330  -.3130  -.2730  -.2330   .0000
  240.000    -.1920  -.3080  -.2880  -.3190   .0000  -.2690
  270.000    -.4820  -.3380  -.3660   .0000  -.2970  -.2960
  300.000    -.2980  -.3200   .0000  -.2980  -.2960  -.3080
  330.000    -.3000   .0000  -.2660  -.2840  -.3010  -.2710
  360.000     .0000  -.2750  -.2790  -.2960  -.2660  -.2850
```

```
                                        CAL T14-053 IA36 02 + T1 + S1 LOWER RH MPS NCZ.              (RUFC07)

MACH  ( 1) =    1.200    ALPHA ( 5) =    6.028

 SECTION ( 1)LOWER RH MPS NCZ.                DEPENDENT VARIABLE CP

X/DE         .0580   .2320   .4060   .5800   .7540   .9280

  PHI
     .000    .0000  -.2600  -.2730  -.2850  -.2760  -.2610
   30.000   -.2370  -.2620  -.2840  -.2660  -.2560   .0000
   60.000    .0420  -.0930  -.2490  -.2610   .0000  -.2630
   90.000   -.0140   .1000  -.1180   .0000  -.2640  -.2720
  120.000   -.2090  -.1920   .0000  -.2600  -.2650  -.2830
  150.000            .0000  -.2470          -.2830
  180.000    .0000  -.2230  -.2670  -.2990  -.2730
  210.000   -.1270  -.2490  -.2960  -.2680  -.2620   .0000
  240.000   -.1410  -.2960  -.3050  -.2980   .0000  -.2610
  270.000   -.4700  -.3980  -.3520   .0000  -.2830  -.2800
  300.000   -.3180  -.3030   .0000  -.2880  -.2750  -.2960
  330.000   -.2770   .0000  -.2650  -.2660  -.2900  -.2780
  360.000    .0000  -.2600  -.2730  -.2850  -.2760  -.2610
```

```
                                   CAL T14-053 IA36 02 + T1 + S1 LOWER RH MPS NOZ.                 (RUFC08)    ( 15 NOV 73  )

                 REFERENCE DATA                                                                          PARAMETRIC DATA

SREF  =     49.4000 SQ.FT.    XMRP  =   158.0000 INCHES                                ALPHA  =       .000   POWER  =     1.000
LREF  =     90.7000 INCHES    YMRP  =      .0000 INCHES                                OPR    =     28.310   SRMPR  =     2.020
BREF  =     90.7000 INCHES    ZMRP  =      .0000 INCHES                                GP1    =     11.000   GY1    =    -9.000
SCALE =       .0190 SCALE                                                              GP2    =       .000   GY2    =    -9.000
                                                                                       GP3    =       .000   GY3    =    -9.000

MACH  ( 1) =     1.194    BETA  ( 1) =   -6.074

 SECTION ( 1)LOWER RH MPS NOZ.                 DEPENDENT VARIABLE CP

X/DE            .0580    .2320    .4060    .5800    .7540    .9280

  PHI
    .000      -.3580   -.3370   -.3270   -.3110   -.3050   -.3000
  30.000      -.3370   -.3360   -.3050   - 2950   -.2940   -.3110
  60.000       .1150   -.0540   - 2910   -.2980   -.3020   -.3040
  90.000      -.1290    .0460   -.1480   -.3220   -.3010   -.3040
 120.000      -.2810   -.2570   -.3240   -.2930   -.2990   -.3030
 150.000               - 3000   -.2910            -.2960
 180.000      -.2800   -.2870   -.3090   -.3050   -.2950
 210.000      -.2500   -.2910   -.3070   -.3040   -.2920   -.3050
 240.000      -.2570   -.2920   -.3100   -.3120   -.3280   -.3030
 270.000      -.4600   -.4570   -.4070   -.3990   -.3430   -.3270
 300.000      -.3120   -.3770   -.3800   -.3550   -.3350   -.3220
 330.000      -.3280   -.3460   -.3430   -.3240   -.3160   -.3060
 360.000      -.3580   -.3370   -.3270   -.3110   -.3050   -.3000
MACH  ( 1) =     1.194    BETA  ( 2) =   -3.044

 SECTION ( 1)LOWER RH MPS NOZ.                 DEPENDENT VARIABLE CP

X/DE            .0580    .2320    .4060    .5800    .7540    .9280

  PHI
    .000       .0000   -.3360   -.3300   -.3310   -.2900   -.3090
  30.000      -.2050   -.3260   -.3320   -.2830   -.3040    .0000
  60.000       .1170    .0260   -.2250   -.3160    .0000   -.3090
  90.000      -.1120    .1110   -.1190    .0000   -.3050   -.3090
 120.000      -.2670   -.2650    .0000   -.2990   -.3000   -.3190
 150.000                .0000   -.2990            -.3180
 180.000       .0000   -.2930   -.3090   -.3200   -.2810
 210.000      -.2590   -.2870   -.3210   -.2910   -.3040    .0000
 240.000      -.2570   -.3120   -.2960   -.3350    .0000   -.3030
 270.000      -.4730   -.4190   -.4110    .0000   -.3420   -.3240
 300.000      -.3510   -.3740    .0000   -.3580   -.3270   -.3370
 330.000      -.3310    .0000   -.3410   -.3250   -.3330   -.2930
 360.000       .0000   -.3360   -.3300   -.3310   -.2900   -.3090
```

```
                           CAL T14-053 IA36 02 + T1 + S1 LOWER RH MPS NOZ.                (RUFC03)

MACH  ( 1) =     1.199    BETA  ( 3) =      .000

 SECTION ( 1)LOWER RH MPS NOZ.               DEPENDENT VARIABLE CP

X/DE          .0580   .2320   .4060   .5800   .7540   .9280

  PHI
    .000    -.2980  -.2950  -.2930  -.2840  -.2540  -.2550
  30.000    -.2520  -.2670  -.2910  -.2680  -.2540  -.2750
  60.000     .1900   .1270  -.1590  -.2650  -.2760  -.2840
  90.000    -.0280   .1640  -.0280  -.2940  -.2810  -.2860
 120.000    -.2310  -.2160  -.2920  -.2860  -.2850  -.2860
 150.000            -.2340  -.2790          -.2820
 180.000    -.2000  -.2560  -.2780  -.2790  -.2550
 210.000    -.1940  -.2570  -.2790  -.2620  -.2560  -.2720
 240.000    -.2490  -.2950  -.2650  -.2730  -.2780  -.2790
 270.000    -.4180  -.3620  -.3070  -.3170  -.2950  -.2930
 300.000    -.2910  -.2630  -.3040  -.3020  -.2930  -.2840
 330.000    -.2590  -.2870  -.2920  -.2920  -.2640  -.2630
 360.000    -.2980  -.2950  -.2930  -.2840  -.2640  -.2550

MACH  ( 1) =     1.195    BETA  ( 4) =     3.049

 SECTION ( 1)LOWER RH MPS NOZ.               DEPENDENT VARIABLE CP

X/DE          .0580   .2320   .4060   .5800   .7540   .9280

  PHI
    .000    -.3350  -.3340  -.3190  -.2960  -.2760  -.3850
  30.000    -.2260  -.2560  -.2900  -.2870  -.3720  -.2970
  60.000     .3050   .2950  -.0790  -.3200  -.3020  -.3020
  90.000     .0190   .2340   .1830  -.2730  -.3050  -.2830
 120.000    -.2240  -.2310  -.2810  -.3130  -.2830  -.2890
 150.000            -.2910  -.3070          -.2810
 180.000    -.2140  -.2830  -.2880  -.3060  -.2830
 210.000    -.1950  -.2370  -.3030  -.3030  -.2940  -.2970
 240.000    -.2180  -.2840  -.3090  -.3230  -.3160  -.3090
 270.000    -.4360  -.3960  -.3790  -.3640  -.3400  -.3040
 300.000    -.3170  -.3600  -.3470  -.3580  -.3220  -.2990
 330.000    -.4040  -.3370  -.3490  -.3190  -.2960  -.2800
 360.000    -.3350  -.3340  -.3190  -.2960  -.2760  -.3850
```

```
                                        CAL T14-053 IA36 02 + T1 + S1 LOWER RH MPS NOZ.                (RUFC08)

MACH  ( 1) =     1.197    BETA  ( 5) =     6.079

 SECTION ( 1)LOWER RH MPS NOZ.                  DEPENDENT VARIABLE CP

X/DE          .0580   .2320   .4060   .5800   .7540   .9280

  PHI
     .000   -.3480  -.3120  -.3250  -.3180  -.3020  -.2950
   30.000   -.1680  -.2010  -.2520  -.2950  -.2970  -.2940
   60.000    .3390   .3570   .0040  -.2780  -.3130  -.2910
   90.000    .0490   .2610   .1570  -.2400  -.3030  -.2790
  120.000   -.2190  -.2030  -.2760  -.3190  -.2830  -.2850
  150.000           -.2890  -.3060          -.2880
  180.000   -.2010  -.2600  -.2880  -.3000  -.2930
  210.000   -.1860  -.2420  -.3000  -.3100  -.2860  -.2940
  240.000   -.2300  -.2980  -.3270  -.3260  -.3130  -.2930
  270.000   -.4260  -.3560  -.3440  -.3750  -.3120  -.3060
  300.000   -.2750  -.2690  -.3480  -.3250  -.3160  -.3080
  330.000   -.3020  -.3400  -.3260  -.3230  -.3050  -.3040
  360.000   -.3480  -.3120  -.3250  -.3180  -.3020  -.2950
```

```
DATE 05 NOV 75            TABULATED DATA FOR CAL T14-053 (IA36)                                                       PAGE 192

                                      CAL T14-053 IA36 02 + T1 + S1 UPPER MPS NOZZLE                 (NJFA01)    ( 18 DEC 73  )

              REFERENCE DATA                                                                          PARAMETRIC DATA

SREF  =     49.4000 SQ.FT.    XMRP  =    158.0000 INCHES                                   BETA   =      .000   POWER  =      .000
LREF  =     90.7000 INCHES    YMRP  =       .0000 INCHES                                   GP1    =    11.000   GY1    =    -9.000
BREF  =     90.7000 INCHES    ZMRP  =       .0000 INCHES                                   GP2    =      .000   GY2    =    -9.000
SCALE =       .0190 SCALE                                                                  GP3    =      .000   GY3    =      .000

MACH  ( 1) =      .901    ALPHA ( 1) =    -8.088

 SECTION ( 1)UPPER MPS NOZZLE                    DEPENDENT VARIABLE DELCP

X/DE          .0580   .2320   .4060   .5800   .7540   .9280

  Y/DE
   -.502    .0000
   -.482            .0000
   -.449                    .0000
   -.434   -.0430
   -.418            .1080
   -.397                            .0000
   -.389                   -.0300
   -.344                           -.0610
   -.336                                    .0000
   -.291                                   -.0190
   -.266                                            .0000
   -.251   -.0560
   -.241            .4960
   -.230                                           -.0060
   -.225                    .5220
   -.198                           -.0780
   -.168                                   -.0340
   -.133                                            .0110
    .000    .2490   .4520   .5120   .3000  -.0060  -.0210
    .133                                           -.0230
    .168                                   -.0010
    .198                            .4000
    .225                    .6790
    .230                                            .0050
    .241            .5690
    .251    .3810
    .266                                            .0000
    .291                                   -.0110
    .336                                    .0000
    .344                           -.1410
    .389                   -.1490
    .397                            .0000
    .418            .0280
    .434    .5750
    .449                    .0000
    .482            .0000
    .502    .0000
```

```
                                   CAL T14-053 IA36 02 + T1 + S: UPPER MPS NOZZLE                  (NUFA01)

MACH  ( 1) =     .900    ALPHA ( 2) =    -4.049

 SECTION ( 1)UPPER MPS NOZZLE                 DEPENDENT VARIABLE DELCP

X/DE        .0580     .2320     .4060     .5800     .7540     .9280

  Y/DE
  -.502     .0000
  -.482               .0000
  -.449                         .0000
  -.434    -.0230
  -.416               .0660
  -.397                                   .0000
  -.389                        -.0260
  -.344                                  -.0520
  -.336                                             .0000
  -.291                                            -.0230
  -.266                                                       .0000
  -.251    -.0700
  -.241               .4790
  -.230                                                      -.0070
  -.225                         .5040
  -.198                                  -.0680
  -.168                                            -.0450
  -.133                                                       .0190
   .000     .2100     .4560     .5040     .1760  -.0100     -.0160
   .133                                                      -.0140
   .168                                             .0190
   .198                                   .3030
   .225                         .5550
   .230                                                       .0130
   .241               .5500
   .251     .3890
   .266                                                       .0000
   .291                                            -.0030
   .336                                             .0000
   .344                                  -.1160
   .389                        -.1100
   .397                                   .0000
   .418               .0060
   .434     .5150
   .449                         .0000
   .482               .0000
   .502     .0000
```

CAL T14-053 IA36 02 + T1 + S1 UPPER MPS NOZZLE (NUFA01)

MACH (1) = .900 ALPHA (3) = .013

SECTION (1)UPPER MPS NOZZLE DEPENDENT VARIABLE DELCP

X/DE Y/DE	.0580	.2320	.4060	.5800	.7540	.9280
-.502	.0000					
-.482		.0000				
-.449			.0000			
-.434	-.0260					
-.418		.0440				
-.397				.0000		
-.389			-.0170			
-.344				-.0600		
-.336					.0000	
-.291					-.0020	
-.266						.0000
-.251	-.0840					
-.241		.4370				
-.230						-.0060
-.225			.4720			
-.198				-.0690		
-.168					-.0530	
-.133						.0280
.000	.2090	.4110	.4680	.1480	-.0080	-.0200
.133						-.0300
.168					.0160	
.198				.2800		
.225			.4630			
.230						.0080
.241		.4570				
.251	.3110					
.266						.0000
.291					-.0230	
.336					.0000	
.344				-.1050		
.389			-.0700			
.397				.0000		
.418		.0110				
.434	.4080					
.449			.0000			
.482		.0000				
.502	.0000					

CAL T14-053 IA36 02 + T1 + S1 UPPER MPS NOZZLE

MACH (1) = .899 ALPHA (4) = 4.005

(NUFA01)

SECTION (1)UPPER MPS NOZZLE DEPENDENT VARIABLE DELCP

X/DE	.0590	.2320	.4060	.5800	.7540	.9280
Y/DE						
-.502	.0000					
-.482		.0000				
-.449			.0000			
-.434	-.0220					
-.418		.0490				
-.397				.0000		
-.389			-.0010			
-.344				-.0660		
-.336					.0000	
-.291					-.0090	
-.266						.0000
-.251	-.0900					
-.241		.4280				
-.230						-.0070
-.225			.4660			
-.198				-.0780		
-.168					-.0440	
-.133						.0460
.000	.2090	.4410	.4800	.1340	.0120	-.0110
.133						-.0320
.168					.0230	
.198				.2260		
.225			.4090			
.230						.0040
.241		.4190				
.251	.3120					
.266						.0000
.291					-.0180	
.336					.0000	
.344				-.0800		
.389			-.0510			
.397				.0000		
.418		.0330				
.434	.3120					
.449			.0000			
.482		.0000				
.502	.0000					

```
                                    CAL T14-053 IA36 02 + T1 + S1 UPPER MPS NOZZLE              (NUFA01)

MACH  ( 1) =      .899    ALPHA ( 5) =     6.006

 SECTION ( 1)UPPER MPS NOZZLE                      DEPENDENT VARIABLE DELCP

X/DE         .0580   .2320   .4060   .5800   .7540   .9280

  Y/DE
   -.502     .0000
   -.482             .0000
   -.449                     .0000
   -.434    -.0440
   -.418             .0490
   -.397                             .0000
   -.389                     .0070
   -.344                            -.0440
   -.336                                     .0000
   -.291                                     .0130
   -.266                                             .0000
   -.251    -.0990
   -.241             .4490
   -.230                                            -.0270
   -.225                     .5120
   -.198                            -.0550
   -.168                                    -.0410
   -.133                                             .0300
    .000     .1990   .4360   .5090   .1290  -.0170  -.0090
    .133                                            -.0510
    .168                                     .0240
    .198                             .1940
    .225                     .3590
    .230                                             .0260
    .241             .3990
    .251     .2990
    .266                                             .0000
    .291                                    -.0370
    .336                                     .0000
    .344                            -.0820
    .389                    -.0180
    .397                             .0000
    .418             .0370
    .434     .2860
    .449                     .0000
    .482             .0000
    .502     .0000
```

REPRODUCIBILITY OF THE
ORIGINAL PAGE IS POOR

```
                                            CAL T14-053 IA36 02 + T1 + S1 UPPER MPS NOZZLE                 (NUFA02)   ( 18 DEC 73  )

                 REFERENCE DATA                                                                                PARAMETRIC DATA

SPEF  =     49.4000 SQ.FT.    XMRP  =   158.0000 INCHES                                  ALPHA  =       .000   POWER  =       .000
LREF  =     90.7000 INCHES    YMRP  =      .0000 INCHES                                  GP1    =     11.000   GY1    =     -9.000
BREF  =     90.7000 INCHES    ZMRP  =      .0000 INCHES                                  GP2    =       .000   GY2    =     -3.000
SCALE =       .0190 SCALE                                                                GP3    =       .000   GY3    =       .000

MACH  ( 1) =      .901    BETA  ( 1) =    -6.079

 SECTION ( 1)UPPER MPS NOZZLE               DEPENDENT VARIABLE DELCP

X/DE          .0580   .2320   .4060   .5800   .7540   .9280

  Y/DE
   -.502      0000
   -.482              .0000
   -.449                      .0000
   -.434    -.0360
   -.418              .2770
   -.397                              .0000
   -.389                      .1110
   -.344                             -.0170
   -.336                                      .0000
   -.291                                      .0070
   -.266                                              .0000
   -.251      .0870
   -.241              .0910
   -.230                                             -.0180
   -.225                      .0390
   -.198                              .0250
   -.168                                     -.0200
   -.133                                              .0300
    .000      .0730   .0950   .0450  -.0040   .0160  -.0040
    .133                                             -.0340
    .168                                      .0160
    .198                              .0260
    .225                     -.0070
    .230                                              .0120
    .241              .1280
    .251      .0950
    .266                                              .0000
    .291                                     -.0220
    .336                                      .0000
    .344                              .0030
    .389                      .0070
    .397                              .0000
    .418              .0010
    .434      .0210
    .449                      .0000
    .482              .0000
    .502      .0000
```

CAL T14-053 IA36 02 + T1 + S1 UPPER MPS NOZZLE (NUFA02)

MACH (1) = .900 BETA (2) = -3.049

SECTION (1)UPPER MPS NOZZLE DEPENDENT VARIABLE DELCP

X/DE	.0580	.2320	.4060	.5800	.7540	.9280
Y/DE						
-.502	.0000					
-.482		.0000				
-.449			.0000			
-.434	-.0260					
-.418		.2050				
-.397				.0000		
-.389			.1370			
-.344				-.0240		
-.335					.0000	
-.291					.0120	
-.266						.0000
-.251	.0140					
-.241		.2270				
-.230						-.0060
-.225			.1830			
-.198				-.0170		
-.168					-.0140	
-.133						.0180
.000	.0950	.2260	.1770	.0260	-.0010	-.0060
.133						-.0240
.168					.0090	
.198				.0640		
.225			.3130			
.230						.0160
.241		.4000				
.251	.1930					
.266						.0000
.291					-.0140	
.336					.0000	
.344				-.0490		
.383			-.0220			
.397				.0000		
.418		-.0460				
.434	.1180					
.449			.0000			
.482		.0000				
.502	.0000					

```
                                    CAL T14-053 IA36 02 + T1 + S1 UPPER MPS NOZZLE                (NUFA02)

MACH   ( 1) =      .901    BETA  ( 3) =      .000

 SECTION ( 1)UPPER MPS NOZZLE                   DEPENDENT VARIABLE DELCP

X/DE          .0580   .2320   .4060   .5800   .7540   .9280

  Y/DE
   -.502     .0000
   -.482             .0000
   -.449                     .0000
   -.434    -.0210
   -.418             .0610
   -.397                             .0000
   -.389                     .0010
   -.344                            -.0550
   -.335                                     .0000
   -.291                                    -.0170
   -.266                                             .0000
   -.251    -.0820
   -.241             .4300
   -.230                                             .0000
   -.225                     .4500
   -.198                            -.0790
   -.168                                    -.0350
   -.133                                             .0260
    .000     .2180   .4200   .4680   .1570   .0030  -.0140
    .133                                            -.0310
    .168                                     .0110
    .198                             .2670
    .225                     .4740
    .230                                             .0080
    .241             .4490
    .251     .3230
    .266                                             .0000
    .291                                    -.0050
    .335                                     .0000
    .344                            -.1030
    .389                    -.0740
    .397                             .0000
    .418             .0100
    .434     .3830
    .449                     .0000
    .482             .0000
    .502     .0000
```

```
DATE 05 NOV 75            TABULATED DATA FOR CAL T14-053 (IA36)                                              PAGE  190

                                      CAL T14-053 IA36 O2 + T1 + S1 UPPER MPS NOZZLE                  (NUFA02)

MACH  ( 1) =      .900    BETA  ( 4) =     3.051

 SECTION ( 1)UPPER MPS NOZZLE                   DEPENDENT VARIABLE DELCP

X/DE           .0580     .2320     .4060     .5800     .7540     .9280

  Y/DE
   -.502       .0000
   -.482                 .0000
   -.449                           .0000
   -.434      -.0050
   -.418                -.1430
   -.397                                     .0000
   -.389                          -.1910
   -.344                                    -.0550
   -.336                                               .0000
   -.291                                              -.0380
   -.266                                                         .0000
   -.251      -.1580
   -.241                 .4710
   -.230                                                        -.0050
   -.225                           .4890
   -.198                                    -.1010
   -.168                                              -.0520
   -.133                                                        -.0010
    .000       .2300     .4670     .4910     .4950     .0120    -.0130
    .133                                                        -.0390
    .158                                               .0020
    .198                                     .4390
    .225                           .4800
    .230                                                         .0090
    .241                 .5320
    .251       .4140
    .266                                                         .0000
    .291                                              -.0410
    .336                                               .0000
    .344                                    -.1410
    .389                          -.0600
    .397                                     .0000
    .418                 .2180
    .434       .5880
    .449                           .0000
    .482                 .0000
    .502       .0000
```

```
                    CAL T14-053 IA36 02 + T1 + S1 UPPER MPS NOZZLE          (NUFA02)

MACH  ( 1) =     .901    BETA  ( 5) =     6.089

 SECTION ( 1)UPPER MPS NOZZLE          DEPENDENT VARIABLE DELCP

X/DE         .0580     .2320     .4060     .5800     .7540     .9280

  Y/DE
  -.502      .0000
  -.482                .0000
  -.449                          .0000
  -.434     -.0420
  -.418               -.2370
  -.397                                    .0000
  -.389                         -.2810
  -.344                                   -.0610
  -.336                                              .0000
  -.291                                             -.0420
  -.256                                                        .0000
  -.251     -.1550
  -.241                .5390
  -.230                                                       -.0260
  -.225                          .5400
  -.198                                   -.2110
  -.168                                             -.0430
  -.133                                                       -.0050
   .000      .2970     .5390     .5530     .6110     .2140    -.0080
   .133                                                       -.0430
   .168                                              .0420
   .198                                    .5870
   .225                          .6460
   .230                                                       -.0040
   .241                .7130
   .251      .5640
   .266                                                        .0000
   .291                                             -.0600
   .336                                              .0000
   .344                                   -.1910
   .353                         -.0030
   .397                                    .0000
   .418                .5010
   .434      .8230
   .449                          .0000
   .482                .0000
   .502      .0000
```

```
                                     CAL T14-053 IA36 02 + T1 + S1 UPPER MPS NOZZLE                  (NUFA03)    ( 18 DEC 73  )

                REFERENCE DATA                                                                              PARAMETRIC DATA

SPREF  =    49.4000 SQ.FT.   XMRP  =   158.0000 INCHES                                 BETA    =      .000   POWER   =      1.000
LREF   =    90.7000 INCHES   YMRP  =      .0000 INCHES                                 OPR     =    36.200   SRMPR   =      2.330
BREF   =    90.7000 INCHES   ZMRP  =      .0000 INCHES                                 GP1     =    11.000   GY1     =     -9.000
SCALE  =      .0190 SCALE                                                              GP2     =      .000   GY2     =     -9.000
                                                                                       GP3     =      .000   GY3     =     -9.000

MACH  ( 1) =      .897    ALPHA ( 1) =    -8.088

 SECTION ( 1)UPPER MPS NOZZLE                  DEPENDENT VARIABLE DELCP

X/DE         .0580   .2320   .4060   .5800   .7540   .9280

  Y/DE
   -.502     .0000
   -.482             .0000
   -.449                     .0000
   -.434    -.2320
   -.418             .2390
   -.397                             .0000
   -.389                   -.0040
   -.344                           -.1140
   -.336                                     .0000
   -.291                                     .0190
   -.266                                             .0000
   -.251    -.2090
   -.241             .5270
   -.230                                             .0260
   -.225                     .5740
   -.198                           -.0790
   -.168                                   -.0400
   -.133                                             .0520
    .000     .2550   .5370   .5860   .3480   .0140  -.0140
    .133                                            -.0590
    .168                                     .0050
    .198                             .8340
    .225                     .7490
    .230                                            -.0230
    .241             .6450
    .251     .4520
    .266                                             .0000
    .291                                   -.0550
    .336                                     .0000
    .344                           -.1670
    .389                   -.0840
    .397                             .0000
    .418            -.0160
    .434     .7050
    .449                     .0000
    .482             .0000
    .502     .0000
```

```
                    CAL T14-053 IA36 02 + T1 + S1 UPPER MPS NOZZLE          (NUFA03)

MACH  ( 1) =     .899    ALPHA ( 2) =   -4.038

 SECTION ( 1)UPPER MPS NOZZLE              DEPENDENT VARIABLE DELCP

X/DE         .0580     .2320     .4060     .5800     .7540     .9280

  Y/DE
   -.502     .0000
   -.482               .0000
   -.449                         .0000
   -.434    -.2010
   -.418               .0890
   -.397                                   .0000
   -.389                        -.0360
   -.344                                  -.0730
   -.336                                             .0000
   -.291                                            -.0470
   -.266                                                       .0000
   -.251    -.2680
   -.241               .4820
   -.230                                                       .0270
   -.225                         .5270
   -.199                                  -.0900
   -.168                                            -.0190
   -.133                                                      -.0150
    .000     .1780     .4980     .5500     .1880    -.0020    -.0210
    .133                                                      -.0080
    .168                                             .0040
    .198                                   .6480
    .225                         .6150
    .230                                                      -.0160
    .241               .6060
    .251     .4320
    .266                                                       .0000
    .291                                             .0040
    .336                                             .0000
    .344                                  -.1110
    .389                        -.1060
    .397                                   .0000
    .418              -.0600
    .434     .5750
    .449                         .0000
    .482               .0000
    .502     .0000
```

```
                              CAL T14-053 IA36 02 + T1 + S1 UPPER MPS NOZZLE                  (NUFAC3)

MACH  ( 1) =      .901    ALPHA ( 3) =     .001

 SECTION ( 1)UPPER MPS NOZZLE                   DEPENDENT VARIABLE DELCP

X/DE         .0580   .2320   .4060   .5800   .7540   .9280

  Y/DE
   -.502     .0000
   -.482             .0000
   -.449                     .0000
   -.434    -.1960
   -.418             .0780
   -.397                             .0000
   -.389                    -.0220
   -.344                            -.0800
   -.336                                     .0000
   -.291                                    -.0480
   -.266                                             .0000
   -.251    -.2600
   -.241             .4440
   -.230                                             .0190
   -.225                     .5110
   -.198                            -.0710
   -.168                                    -.0140
   -.133                                            -.0300
    .000     .1430   .4570   .5230   .1480   .0160  -.0040
    .133                                             .0030
    .168                                     .0180
    .198                             .5390
    .225                     .5150
    .230                                            -.0060
    .241             .5170
    .251     .3510
    .266                                             .0000
    .291                                     .0010
    .336                                     .0000
    .344                            -.0890
    .389                    -.1000
    .397                             .0000
    .418            -.0560
    .434     .4760
    .443                     .0000
    .482             .0000
    .502     .0000
```

```
DATE 05 NOV 75            TABULATED DATA FOR CAL T14-053 (IA36)                                        PAGE 195

                                    CAL T14-053 IA36 02 + T1 + S1 UPPER MPS NOZZLE                 (NUFA03)

MACH  ( 1) =     .902   ALPHA ( 4) =    4.026

 SECTION ( 1)UPPER MPS NOZZLE                    DEPENDENT VARIABLE DELCP

X/DE         .0580     .2320     .4060     .5800     .7540     .9280

  Y/DE
  -.502      .0000
  -.482                .0000
  -.449                          .0000
  -.434     -.1590
  -.418                .0840
  -.397                                    .0000
  -.389                          .0010
  -.344                                   -.0820
  -.336                                              .0000
  -.291                                             -.0500
  -.266                                                        .0000
  -.251     -.2610
  -.241                .4610
  -.230                                                        .0090
  -.225                          .5390
  -.198                                   -.0750
  -.168                                             -.0180
  -.133                                                        .0100
   .000      .1550     .4870     .5680     .1570     .0020     .0020
   .133                                                       -.0010
   .168                                              .0260
   .198                                    .3140
   .225                          .4400
   .230                                                       -.0040
   .241                .4870
   .251      .3360
   .266                                                        .0000
   .291                                              .0230
   .336                                              .0000
   .344                                   -.0760
   .389                         -.0990
   .397                                    .0000
   .418               -.0400
   .434      .3610
   .449                          .0000
   .482                .0000
   .502      .0000
```

REPRODUCIBILITY OF THE
ORIGINAL PAGE IS POOR

```
                                 CAL T14-053 IA36 02 + T1 + S1 UPPER MPS NOZZLE              (NUFA03)

MACH  ( 1) =     .898   ALPHA ( 5) =    6.021

 SECTION ( 1)UPPER MPS NOZZLE              DEPENDENT VARIABLE DELCP

X/DE        .0580   .2320   .4060   .5800   .7540   .9280

  Y/DE
   -.502    .0000
   -.482            .0000
   -.449                    .0000
   -.434   -.1900
   -.418            .0460
   -.397                            .0000
   -.389                    .0190
   -.344                           -.0780
   -.336                                    .0000
   -.291                                    .0150
   -.266                                            .0000
   -.251   -.2550
   -.241            .4810
   -.230                                            .0050
   -.225                    .5840
   -.198                           -.0350
   -.168                                   -.0170
   -.133                                            .0510
    .000    .1780   .4690   .5780   .1780   .0210  -.0040
    .133                                           -.0280
    .168                                    .0260
    .198                            .2450
    .225                    .4270
    .230                                            .0000
    .241            .4850
    .251    .3000
    .266                                            .0000
    .291                                   -.0420
    .336                                    .0000
    .344                           -.0740
    .389                   -.0640
    .397                            .0000
    .418            .0040
    .434    .3520
    .449                    .0000
    .482            .0000
    .502    .0000
```

```
DATE 05 NOV 75            TABULATED DATA FOR CAL T14-053 (IA36)                                          PAGE  197

                                    CAL T14-053 IA36 02 + T1 + S1 UPPER MPS NOZZLE              (NUFA04)    ( 18 DEC 73  )

               REFERENCE DATA                                                               PARAMETRIC DATA

SREF  =     49.4000 SQ.FT.   XMRP  =   158.0000 INCHES                         ALPHA  =       .000   POWER  =      1.000
LREF  =     90.7000 INCHES   YMRP  =      .0000 INCHES                         OPR    =     36.200   SHMPR  =      2.330
BREF  =     90.7000 INCHES   ZMRP  =      .0000 INCHES                         GP1    =     11.000   GY1    =     -9.000
SCALE =       .0190 SCALE                                                      GP2    =       .000   GY2    =     -9.000
                                                                               GP3    =       .000   GY3    =     -9.000

MACH  ( 1) =      .899    BETA  ( 1) =    -5.078

 SECTION ( 1)UPPER MPS NOZZLE              DEPENDENT VARIABLE DELCP

X/DE        .0580     .2320     .4060     .5800     .7540     .9280

  Y/DE
    -.502   .0000
    -.482                  .0000
    -.449                            .0000
    -.434  -.1760
    -.418                  .3820
    -.397                                      .0000
    -.389                            .1550
    -.344                                     -.0530
    -.336                                                .0000
    -.291                                               -.0060
    -.266                                                          .0000
    -.251   .0910
    -.241                  .0890
    -.230                                                          .0220
    -.225                            .0450
    -.198                                      .0040
    -.168                                               -.0300
    -.133                                                          .0260
     .000  -.0100      .1000     .0630     .0020     .0040     .0120
     .133                                                         -.0210
     .168                                                .0280
     .198                                      .0240
     .225                            .0360
     .230                                                         -.0050
     .241                  .2460
     .251   .1010
     .266                                                          .0000
     .291                                               -.0030
     .336                                                .0000
     .344                                      .0280
     .389                            .0220
     .397                                      .0000
     .418                  .0240
     .434  -.0070
     .449                            .0000
     .482                  .0000
     .502   .0000
```

```
                         CAL T14-053 IA36 O2 + T1 + S1 UPPER MPS NOZZLE             (NUFA04)

MACH  ( 1) =      .900    BETA  ( 2) =    -3.049

 SECTION ( 1)UPPER MPS NOZZLE                  DEPENDENT VARIABLE DELCP

X/DE          .0580     .2320     .4060     .5800     .7540     .9280

  Y/DE
    -.502     .0000
    -.482               .0000
    -.449                         .0000
    -.434    -.1390
    -.418               .2090
    -.397                                   .0000
    -.389                         .2000
    -.344                                  -.0740
    -.336                                             .0000
    -.291                                            -.0030
    -.266                                                       .0000
    -.251    -.1120
    -.241               .2450
    -.230                                                       .0230
    -.225                         .2530
    -.193                                  -.0050
    -.168                                            -.0020
    -.133                                                       .0300
     .000    -.0070     .2560     .2670     .0280    -.0010     .0020
     .133                                                      -.0350
     .168                                             .0180
     .198                                   .1290
     .225                         .3930
     .230                                                       .0050
     .241               .4420
     .251     .2090
     .266                                                       .0000
     .291                                            -.0070
     .336                                             .0000
     .344                                  -.0470
     .389                        -.0460
     .397                                   .0000
     .418              -.0490
     .434     .1630
     .449                         .0000
     .482               .0000
     .502      0000
```

CAL T14-053 IA36 02 + T1 + S1 UPPER MPS NOZZLE (NUFA04)

MACH (1) = .899 BETA (3) = .000

SECTION (1)UPPER MPS NOZZLE DEPENDENT VARIABLE DELCP

X/DE	.0580	.2320	.4060	.5800	.7540	.9280
Y/DE						
-.502	.0000					
-.482		.0000				
-.449			.0000			
-.434	-.1610					
-.418		.0440				
-.397				.0000		
-.389			-.0260			
-.344				-.0780		
-.336					.0000	
-.291					-.0130	
-.266						.0000
-.251	-.2580					
-.241		.4410				
-.230						.0190
-.225			.4960			
-.198				-.0690		
-.168					-.0130	
-.133						.0180
.000	.1390	.4440	.5110	.1630	.0000	.0010
.133						-.0230
.168					.0220	
.198				.3810		
.225			.5350			
.230						-.0090
.241		.5160				
.251	.3480					
.266						.0000
.291					-.0030	
.335					.0000	
.344				-.0960		
.389			-.0980			
.397				.0000		
.418		-.0390				
.434	.4320					
.449			.0000			
.482		.0000				
.502	.0000					

```
                          CAL T14-053 IA36 O2 + T1 + S1 UPPER MPS NOZZLE              (NUFA04)

MACH  ( 1) =     .898    BETA  ( 4) =    3.051

 SECTION ( 1)UPPER MPS NOZZLE                    DEPENDENT VARIABLE DELCP

X/DE         .0580   .2320   .4060   .5800   .7540   .9280

  Y/DE
   -.502     .0000
   -.482             .0000
   -.449                     .0000
   -.434    -.1630
   -.418            -.2020
   -.397                             .0000
   -.389                    -.3240
   -.344                            -.0500
   -.336                                     .0000
   -.291                                    -.0480
   -.266                                             .0000
   -.251    -.3730
   -.241             .5080
   -.230                                             .0230
   -.225                     .5320
   -.198                            -.1540
   -.168                                    -.0420
   -.133                                            -.0030
    .000     .2170   .5310   .5580   .6030   .0040  -.0070
    .133                                            -.0380
    .168                                     .0100
    .198                             .5380
    .225                     .5500
    .230                                            -.0220
    .241             .6180
    .251     .4940
    .266                                             .0000
    .291                                    -.0360
    .335                                     .0000
    .344                            -.1450
    .389                    -.0540
    .397                             .0000
    .418             .0830
    .434     .6450
    .449                     .0000
    .482             .0000
    .502     .0000
```

```
                           CAL T14-053 IA36 02 + T1 + S1 UPPER MPS NOZZLE              (NUFA04)

MACH  ( 1) =     .899   BETA  ( 5) =    6.088

 SECTION ( 1)UPPER MPS NOZZLE              DEPENDENT VARIABLE DELCP

X/DE        .0580    .2320    .4060    .5800    .7540    .9280

  Y/DE
   -.502    .0000
   -.482             .0000
   -.449                      .0000
   -.434   -.2630
   -.418            -.2580
   -.397                               .0000
   -.389                     -.4010
   -.344                              -.0720
   -.335                                        .0000
   -.291                                       -.0650
   -.266                                                 .0000
   -.251   -.3450
   -.241             .5820
   -.230                                                 .0250
   -.225                      .5920
   -.198                              -.2610
   -.168                                       -.0450
   -.133                                                -.0190
    .000    .2960    .6160    .6280    .7190    .2580   -.0060
    .133                                                -.0480
    .168                                        .0270
    .198                               .6430
    .225                      .7110
    .230                                                -.0420
    .241             .8370
    .251    .6750
    .266                                                 .0000
    .291                                       -.0540
    .336                                        .0000
    .344                              -.2000
    .389                      .0150
    .397                               .0000
    .418             .3920
    .434    .8890
    .449                      .0000
    .482             .0000
    .502    .0000
```

```
DATE 05 NOV 75            TABULATED DATA FOR CAL T14-053 (IA36)                                                              PAGE  202

                                    CAL T14-053 IA36 02 + T! + S1 UPPER MPS NOZZLE                          (NUFA05)    ( 18 DEC 73  )

                 REFERENCE DATA                                                                            PARAMETRIC DATA

SREF  =    49.4000 SQ.FT.   XMRP  =   158.0000 INCHES                               BETA    =      .000   POWER   =      .000
LREF  =    90.7000 INCHES   YMRP  =      .0000 INCHES                               GP1     =    11.000   GY1     =    -9.000
BREF  =    90.7000 INCHES   ZMRP  =      .0000 INCHES                               GP2     =      .000   GY2     =    -9.000
SCALE =      .0190 SCALE                                                            GP3     =      .000   GY3     =      .000

MACH  ( 1) =     1.203    ALPHA ( 1) =   -8.101

 SECTION ( 1)UPPER MPS NOZZLE              DEPENDENT VARIABLE DELCP

X/DE          .0580     .2320     .4060     .5800     .7540     .9280

  Y/DE
   -.502      .0000
   -.492                .0000
   -.449                          .0000
   -.434     -.0090
   -.418                .5770
   -.397                                    .0000
   -.389                          .2720
   -.344                                   -.0130
   -.336                                              .0000
   -.291                                             -.0240
   -.266                                                        .0000
   -.251      .0550
   -.241                .7210
   -.230                                                       -.0110
   -.225                          .7320
   -.198                                    .2630
   -.168                                             -.0430
   -.133                                                        .0070
    .000      .4770     .7090     .7320     .8960     .0520    -.0180
    .133                                                       -.0250
    .168                                              .0510
    .198                                    .7540
    .225                          .8330
    .230                                                       -.0050
    .241                .7000
    .251      .5980
    .266                                                        .0000
    .291                                             -.0340
    .336                                              .0000
    .344                                   -.0890
    .389                         -.1070
    .397                                    .0000
    .418                .3500
    .434      .9050
    .449                          .0000
    .482                .0000
    .502      .0000
```

```
DATE 05 NOV 75            TABULATED DATA FOR CAL T14-053 (IA36)                                              PAGE  203

                                      CAL 114-053 IA36 02 + T1 + S1 UPPER MPS NOZZLE                   (NUFA05)

MACH  ( 1) =     1.202    ALPHA ( 2) =    -4.038

 SECTION ( 1)UPPER MPS NOZZLE                  DEPENDENT VARIABLE DELCP

X/DE         .0580   .2320   .4060   .5800   .7540   .9280

  Y/DE
   -.502     .0000
   -.482             .0000
   -.449                     .0000
   -.434    -.0060
   -.418             .3490
   -.397                             .0000
   -.389                     .2000
   -.344                            -.0430
   -.336                                     .0000
   -.291                                    -.0120
   -.266                                             .0000
   -.251     .0560
   -.241             .6120
   -.230                                            -.0030
   -.225                     .6360
   -.198                             .1410
   -.168                                    -.0200
   -.133                                             .0190
    .000     .4120   .6010   .6350   .7660   .0370  -.0210
    .133                                            -.0260
    .168                                     .0410
    .198                             .6930
    .225                     .7710
    .230                                             .0120
    .241             .6790
    .251     .5420
    .266                                             .0000
    .291                                    -.0380
    .336                                     .0000
    .344                            -.0670
    .389                    -.0700
    .397                             .0000
    .418             .1830
    .434     .8210
    .449                     .0000
    .482             .0000
    .502     .0000
```

```
                         CAL T14-053 IA36 02 + T1 + S1 UPPER MPS NOZZLE                (NUFA05)

MACH  ( 1) =    1.203    ALPHA ( 3) =    -.011

 SECTION ( 1)UPPER MPS NOZZLE                DEPENDENT VARIABLE DELCP

X/DE        .0580  .2320  .4060  .5800  .7540  .9280

  Y/DE
    -.502   .0000
    -.482          .0000
    -.449                 .0000
    -.434   .0010
    -.418          .2220
    -.397                        .0000
    -.389                 .1430
    -.344                       -.0490
    -.336                               .0000
    -.291                              -.0040
    -.266                                      .0000
    -.251   .0140
    -.241          .5260
    -.230                                     -.0070
    -.225                 .5330
    -.198                        .0740
    -.168                              -.0140
    -.133                                      .0260
     .000   .3290  .5160  .5310  .6800  .0210 -.0120
     .133                                     -.0370
     .168                               .0440
     .198                        .6410
     .225                 .6850
     .230                                      .0020
     .241          .6430
     .251   .5230
     .266                                      .0000
     .291                              -.0100
     .336                               .0000
     .344                       -.0440
     .389                -.0480
     .397                        .0000
     .418          .1280
     .434   .6410
     .449                 .0000
     .482          .0000
     .502   .0000
```

DATE 05 NOV 75 TABULATED DATA FOR CAL T14-053 (IA36)

CAL T14-053 IA36 O2 + T1 + S1 UPPER MPS NOZZLE (NUFAC5)

MACH (1) = 1.203 ALPHA (4) = 4.003

SECTION (1)UPPER MPS NOZZLE DEPENDENT VARIABLE DELCP

X/DE	.0580	.2320	.4060	.5800	.7540	.9280
Y/DE						
-.502	.0000					
-.482		.0000				
-.449			.0000			
-.434	-.0060					
-.418		.2330				
-.397				.0000		
-.389			.1180			
-.344				-.0670		
-.336					.0000	
-.291					.0050	
-.266						.0000
-.251	.0200					
-.241		.5230				
-.230						-.0040
-.225			.5140			
-.198				.0460		
-.168					-.0230	
-.133						.0160
.000	.3350	.5280	.5130	.5890	.0180	-.0180
.133						-.0290
.168					.0370	
.198				.5370		
.225			.5570			
.230						-.0050
.241		.5510				
.251	.4400					
.266						.0000
.291					-.0140	
.336					.0000	
.344				-.0140		
.383			-.0340			
.397				.0000		
.418		.1510				
.434	.4780					
.449			.0000			
.482		.0000				
.502	.0000					

```
                                 CAL T14-053 IA36 02 + T1 + S1 UPPER MPS NOZZLE              (NUFA05)

MACH  ( 1) =    1.202    ALPHA ( 5) =    6.018

 SECTION ( 1)UPPER MPS NOZZLE              DEPENDENT VARIABLE DELCP

X/DE        .0580   .2320   .4060   .5800   .7540   .9280

  Y/DE
  -.502    .0000
  -.482            .0000
  -.449                    .0000
  -.434   -.0280
  -.418            .2640
  -.397                            .0000
  -.389                    .1380
  -.344                           -.0880
  -.336                                    .0000
  -.291                                    .0210
  -.266                                            .0000
  -.251   -.0050
  -.241            .6160
  -.230                                            .0010
  -.225                    .6260
  -.198                            .0310
  -.168                                   -.0190
  -.133                                            .0300
   .000    .4100   .6140   .6230   .5290   .0160  -.0130
   .133                                           -.0300
   .168                                    .0290
   .198                            .4410
   .225                    .4260
   .230                                            .0010
   .241            .4870
   .251    .4380
   .266                                            .00[illegible]
   .291                                   -.0210
   .336                                    .0000
   .344                           -.0070
   .369                    .0040
   .397                            .0000
   .418            .2300
   .434    .3820
   .449                    .0000
   .482            .0000
   .502    .0000
```

```
DATE 05 NOV 75            TABULATED DATA FOR CAL T14-053 (IA36)                                         PAGE  207

                                    CAL T14-053 IA36 02 + T1 + S1 UPPER MPS NOZZLE         (NUFA06)    ( 18 DEC 73  )

              REFERENCE DATA                                                                PARAMETRIC DATA

SREF  =     49.4000 SQ.FT.   XMRP  =   158.0000 INCHES                      ALPHA  =      .000   POWER  =      .000
LREF  =     90.7000 INCHES   YMRP  =      .0000 INCHES                      GP1    =    11.000   GY1    =    -9.000
BREF  =     90.7000 INCHES   ZMRP  =      .0000 INCHES                      GP2    =      .000   GY2    =    -9.000
SCALE =       .0190 SCALE                                                   GP3    =      .000   GY3    =      .000

MACH  ( 1) =    1.202    BETA  ( 1) =    -6.079

 SECTION ( 1)UPPER MPS NOZZLE                  DEPENDENT VARIABLE DELCP

X/DE          .0580     .2320     .4060     .5800     .7540     .9280

 Y/DE
   -.502      .0000
   -.482                .0000
   -.449                          .0000
   -.434      .0560
   -.418                .5890
   -.397                                    .0000
   -.389                          .3650
   -.344                                    .0030
   -.336                                              .0000
   -.291                                              .0070
   -.266                                                        .0000
   -.251      .2130
   -.241                .3060
   -.230                                                        .0050
   -.225                          .3970
   -.198                                    .2300
   -.168                                              .0070
   -.133                                                        .0310
    .000      .1650     .2960     .4080     .0950    -.0120    -.0010
    .133                                                       -.0280
    .168                                              .0290
    .198                                    .1830
    .225                          .6150
    .230                                                       -.0050
    .241                .5250
    .251      .3010
    .266                                                        .0000
    .291                                             -.0100
    .336                                              .0000
    .344                                    .0170
    .389                         -.0210
    .397                                    .0000
    .418               -.0350
    .434      .0990
    .449                          .0000
    .482                .0000
    .502      .0000
```

```
                              CAL T14-053 IA36 O2 + T1 + S1 UPPER MPS NOZZLE              (NUFA06)

MACH  ( 1) =    1.202    BETA  ( 2) =   -3.051

 SECTION ( 1)UPPER MPS NOZZLE              DEPENDENT VARIABLE DELCP

X/DE       .0580   .2320   .4060   .5800   .7540   .9280

   Y/DE
  -.502    .0000
  -.482            .0000
  -.449                    .0000
  -.434   -.0090
  -.418            .3890
  -.397                            .0000
  -.369                    .3740
  -.344                            .0160
  -.336                                    .0000
  -.291                                   -.0190
  -.266                                            .0000
  -.251    .1480
  -.241            .4170
  -.230                                            .0020
  -.225                    .5070
  -.198                            .1990
  -.158                                   -.0170
  -.133                                            .0380
   .000    .2050   .4180   .5100   .3630   .0010   .0080
   .133                                           -.0300
   .168                                    .0080
   .198                            .3790
   .225                    .7190
   .230                                           -.0070
   .241            .5380
   .251    .3880
   .266                                            .0000
   .291                                   -.0170
   .336                                    .0000
   .344                           -.0230
   .389                   -.0820
   .397                            .0000
   .418           -.0130
   .434    .2300
   .449                     0000
   .482            .0000
   .502    .0000
```

```
                    CAL T14-053 IA36 02 + T1 + S1 UPPER MPS NOZZLE          (NUFA06)

MACH  ( 1) =    1.202    BETA  ( 3) =     .000

 SECTION ( 1)UPPER MPS NOZZLE               DEPENDENT VARIABLE DELCP

X/DE         .0580     .2320     .4060     .5800     .7540     .9280

  Y/DE
   -.502     .0000
   -.482               .0000
   -.449                         .0000
   -.434     .0000
   -.418               .2120
   -.397                                   .0000
   -.389                         .1690
   -.344                                  -.0460
   -.336                                             .0000
   -.291                                             .0000
   -.266                                                       .0000
   -.251     .0150
   -.241               .5190
   -.230                                                       .0000
   -.225                         .0000
   -.198                                   .0000
   -.168                                            -.0140
   -.133                                                       .0260
    .000     .3310     .0000     .0000     .6800     .0230    -.0100
    .133                                                      -.0340
    .168                                             .0330
    .198                                   .0000
    .225                         .6980
    .230                                                      -.0090
    .241               .0000
    .251     .5070
    .266                                                       .0000
    .291                                             .0000
    .336                                             .0000
    .344                                  -.0460
    .389                        -.0540
    .397                                   .0000
    .418               .1180
    .434     .0000
    .449                         .0000
    .482               .0000
    .502     .0000
```

```
DATE 05 NOV 75             TABULATED DATA FOR CAL T14-053 (IA36)                                             PAGE  210

                                      CAL T14-053 IA36 O2 + T1 + S1 UPPER MPS NOZZLE                (NUFA06)

MACH  ( 1) =    1.203   BETA  ( 4) =    3.051

 SECTION ( 1)UPPER MPS NOZZLE                  DEPENDENT VARIABLE DELCP

X/DE             .0580     .2320     .4060     .5800     .7540     .9280

   Y/DE
    -.502        .0000
    -.482                  .0000
    -.449                            .0000
    -.434        .0320
    -.418                  .0290
    -.397                                      .0000
    -.389                           -.1260
    -.344                                     -.0730
    -.336                                                .0000
    -.291                                               -.0080
    -.266                                                          .0000
    -.251       -.0610
    -.241                  .6380
    -.230                                                         -.0130
    -.225                            .6160
    -.198                                     -.1300
    -.168                                               -.0320
    -.133                                                          .0070
     .000        .4700     .6450     .6350     .6570     .1860    -.0290
     .133                                                         -.0510
     .168                                                .0420
     .198                                      .6250
     .225                            .7250
     .230                                                          .0040
     .241                  .6860
     .251        .6200
     .266                                                          .0000
     .291                                               -.0570
     .336                                                .0000
     .344                                     -.0760
     .389                           -.0160
     .397                                      .0000
     .418                  .4900
     .434        .9020
     .449                            .0000
     .482                  .0000
     .502        .0000
```

DATE 05 NOV 75 TABULATED DATA FOR CAL T14-053 (IA36)

CAL T14-053 IA36 02 + T1 + S1 UPPER MPS NOZZLE (NUFA06)

MACH (1) = 1.203 BETA (5) = 6.079

SECTION (1)UPPER MPS NOZZLE DEPENDENT VARIABLE DELCP

X/DE	.0580	.2320	.4060	.5800	.7540	.9280
Y/DE						
-.502	.0000					
-.482		.0000				
-.449			.0000			
-.434	-.0490					
-.418		-.1180				
-.397				.0000		
-.393			-.1790			
-.344				-.0690		
-.336					.0000	
-.291					-.0080	
-.266						.0000
-.251	-.0860					
-.241		.7390				
-.230						-.0220
-.225			.7020			
-.198				-.1910		
-.168					-.0750	
-.133						.0130
.000	.5480	.7430	.7170	.6930	.6840	-.0400
.133						-.0440
.168					.0510	
.198				.7040		
.225			.8650			
.230						-.0090
.241		.8610				
.251	.7830					
.265						.0000
.291					-.0560	
.336					.0000	
.344				-.0770		
.399			-.0030			
.397				.0000		
.418		.8430				
.434	1.0950					
.449			.0000			
.462		.0000				
.502	.0000					

```
                                        CAL T14-053 IA36 02 + T1 + S1 UPPER MPS NOZZLE          (NUFA07)    ( 18 DEC 73  )

                 REFERENCE DATA                                                                      PARAMETRIC DATA

SREF  =     49.4000 SQ.FT.   XMRP  =   158.0000 INCHES                        BETA    =      .000   POWER   =     1.000
LREF  =     90.7000 INCHES   YMRP  =      .0000 INCHES                        OPR     =    28.310   SRMPR   =     2.020
BREF  =     90.7000 INCHES   ZMRP  =      .0000 INCHES                        GP1     =    11.000   GY1     =    -9.000
SCALE =       .0190 SCALE                                                     GP2     =      .000   GY2     =    -9.000
                                                                              GP3     =      .000   GY3     =    -9.000

MACH  ( 1) =     1.199    ALPHA ( 1) =    -8.108

 SECTION ( 1)UPPER MPS NOZZLE                DEPENDENT VARIABLE DELCP

X/DE        .0580    .2320    .4060    .5800    .7540    .9280

  Y/DE
   -.502    .0000
   -.482             .0000
   -.449                      .0000
   -.434   -.0320
   -.418             .5630
   -.397                               .0000
   -.389                      .2780
   -.344                              -.0840
   -.336                                        .0000
   -.291                                       -.0740
   -.266                                                 .0000
   -.251    .0760
   -.241             .6730
   -.230                                                -.0040
   -.225                      .7130
   -.198                               .2850
   -.168                                       -.0760
   -.133                                                -.0090
    .000    .4970    .6940    .6680    .8840    .0290   -.0430
    .133                                                -.0100
    .168                                        .0370
    .198                               .7870
    .225                      .8340
    .230                                                -.0090
    .241             .7000
    .251    .6280
    .266                                                 .0000
    .291                                        .0090
    .336                                        .0000
    .344                              -.0880
    .389                     -.1290
    .397                               .0000
    .418             .2850
    .434    .9890
    .449                      .0000
    .482             .0000
    .502    .0000
```

CAL T14-053 IA36 02 + T1 + S1 UPPER MPS NOZZLE (NUFA07)

MACH (1) = 1.198 ALPHA (2) = -4.075

SECTION (1)UPPER MPS NOZZLE DEPENDENT VARIABLE DELCP

X/DE	.0580	.2320	.4060	.5800	.7540	.9280
Y/DE						
-.502	.0000					
-.482		.0000				
-.449			.0000			
-.434	-.0910					
-.418		.4450				
-.397				.0000		
-.389			.2010			
-.344				-.0960		
-.336					.0000	
-.291					-.0410	
-.266						.0000
-.251	.0530					
-.241		.5700				
-.230						.0010
-.225			.5890			
-.198				.1040		
-.168					-.0400	
-.133						.0200
.000	.3970	.6020	.5710	.7520	.0200	-.0230
.133						-.0270
.168					.0530	
.198				.7130		
.225			.7740			
.230						-.0070
.241		.6740				
.251	.5580					
.266						.0000
.291					-.0220	
.336					.0000	
.344				-.0590		
.389			-.0630			
.397				.0000		
.419		.1560				
.434	.8460					
.449			.0000			
.482		.0000				
.502	.0000					

```
DATE 05 NOV 75            TABULATED DATA FOR CAL T14-053 (IA36)
                                                                                    PAGE  214
                                    CAL T14-053 IA36 02 + T1 + S1 UPPER MPS NOZZLE                (NUFA07)

MACH  ( 1) =     1.197    ALPHA ( 3) =    -.023

 SECTION ( 1)UPPER MPS NOZZLE                    DEPENDENT VARIABLE DELCP

X/DE          .0580    .2320    .4060    .5800    .7540    .9280

  Y/DE
   -.502      .0000
   -.482               .0000
   -.449                        .0000
   -.434     -.1020
   -.418               .3210
   -.397                                 .0000
   -.389                        .1420
   -.344                                -.0940
   -.336                                          .0000
   -.291                                         -.0420
   -.266                                                   .0000
   -.251      .0090
   -.241               .4550
   -.230                                                   .0190
   -.225                        .5000
   -.198                                 .0410
   -.168                                         -.0210
   -.133                                                   .0200
    .000      .3170    .5040    .4880    .6720    .0100   -.0200
    .133                                                  -.0170
    .168                                          .0360
    .198                                 .6400
    .225                        .7130
    .230                                                  -.0210
    .241               .6280
    .251      .5210
    .266                                                   .0000
    .291                                         -.0100
    .336                                          .0000
    .344                                -.0390
    .389                       -.0530
    .397                                 .0000
    .418               .0720
    .434      .6190
    .449                        .0000
    .482               .0000
    .502      .0000
```

CAL T14-053 IA36 O2 + T1 + S1 UPPER MPS NOZZLE (NUFA07)

MACH (1) = 1.196 ALPHA (4) = 4.017

SECTION (1)UPPER MPS NOZZLE DEPENDENT VARIABLE DELCP

X/DE	.0580	.2320	.4060	.5800	.7540	.9280
Y/DE						
-.502	.0000					
-.482		.0000				
-.449			.0000			
-.434	-.1260					
-.418		.0000				
-.397				.0000		
-.389			.1190			
-.344				-.0570		
-.336					.0000	
-.291					.0000	
-.266						.0000
-.251	-.0190					
-.241		.5140				
-.230						-.0030
-.225			.5430			
-.198				.0170		
-.168					-.0270	
-.133						.0000
.000	.0000	.5170	.4570	.4580	-.0120	-.0100
.133						.0000
.168					.0260	
.198				.5010		
.225			.5090			
.230						.0380
.241		.5040				
.251	.4330					
.266						.0000
.291					.0000	
.336					.0000	
.344				-.0510		
.389			.0000			
.397				.0000		
.418		.0000				
.434	.4460					
.449			.0000			
.482		.0000				
.502	.0000					

```
                                   CAL T14-053 IA36 02 + T1 + S1 UPPER MPS NOZZLE              (NUFA07)

MACH  ( 1) =    1.200    ALPHA ( 5) =    6.028

 SECTION ( 1)UPPER MPS NOZZLE                DEPENDENT VARIABLE DELCP

X/DE      .0580  .2320  .4060  .5800  .7540  .9280

  Y/DE
  -.502   .0000
  -.482          .0000
  -.449                 .0000
  -.434  -.1130
  -.418          .0000
  -.397                        .0000
  -.389                 .1350
  -.344                       -.0580
  -.336                               .0000
  -.291                               .0000
  -.266                                      .0000
  -.251  -.0320
  -.241          .6040
  -.230                                      .0020
  -.225                 .6060
  -.198                        .0310
  -.168                              -.0400
  -.133                                      .0000
   .000   .0000  .6260  .5150  .3440 -.0110 -.0030
   .133                                      .0000
   .168                               .0380
   .198                        .3990
   .225                 .3640
   .230                                      .0320
   .241          .3900
   .251   .4280
   .266                                      .0000
   .291                               .0000
   .336                               .0000
   .344                       -.0240
   .389                 .0000
   .397                        .0000
   .418          .0000
   .434   .3370
   .449                 .0000
   .482          .0000
   .502   .0000
```

```
DATE 05 NOV 75             TABULATED DATA FOR CAL T14-053 (IA36)                                                     PAGE  217

                                     CAL T14-053 IA36 02 + T1 + S1 UPPER MPS NOZZLE                  (NUFA08)   ( 18 DEC 73  )

                REFERENCE DATA                                                                               PARAMETRIC DATA

SREF  =     49.4000 SQ.FT.   XMRP  =   158.0000 INCHES                                     ALPHA  =       .000   POWER  =     1.000
LREF  =     90.7000 INCHES   YMRP  =      .0000 INCHES                                     OPR    =     28.310   SRMPR  =     2.020
BREF  =     90.7000 INCHES   ZMRP  =      .0000 INCHES                                     GP1    =     11.000   GY1    =    -9.000
SCALE =       .0190 SCALE                                                                  GP2    =       .000   GY2    =    -9.000
                                                                                           GP3    =       .000   GY3    =    -9.000

MACH  ( 1) =     1.194    BETA  ( 1) =   -6.074

 SECTION ( 1)UPPER MPS NOZZLE                  DEPENDENT VARIABLE DELCP

X/DE          .0580   .2320   .4060   .5800   .7540   .9280

  Y/DE
   -.502      .0000
   -.482              .0000
   -.449                      .0000
   -.434      .0570
   -.418              .6380
   -.397                              .0000
   -.389                      .3730
   -.344                             -.0230
   -.336                                      .0000
   -.291                                     -.0340
   -.266                                              .0000
   -.251      .2500
   -.241              .0000
   -.230                                              .0200
   -.225                      .4180
   -.198                              .2190
   -.168                                      .0300
   -.133                                              .0220
    .000      .1450   .0000   .3590   .0090  -.0230  -.0090
    .133                                             -.0170
    .168                                      .0270
    .198                              .1900
    .225                      .5010
    .230                                             -.0080
    .241              .5130
    .251      .3520
    .266                                              .0000
    .291                                      .0130
    .336                                      .0000
    .344                              .0360
    .399                     -.0130
    .397                              .0000
    .418             -.0450
    .434      .0550
    .449                      .0000
    .482              .0000
    .502      .0000
```

```
                                  CAL T14-053 IA36 O2 + T1 + S1 UPPER MPS NOZZLE                (NUFA08)

MACH  ( 1) =     1.194    BETA  ( 2) =    -3.044

 SECTION ( 1)UPPER MPS NOZZLE                 DEPENDENT VARIABLE DELCP

X/DE          .0580   .2320   .4060   .5800   .7540   .9280

  Y/DE
  -.502      .0000
  -.482              .0000
  -.449                      .0000
  -.434     -.0120
  -.418              .0000
  -.397                              .0000
  -.389                      .3620
  -.344                             -.0040
  -.336                                      .0000
  -.291                                      .0000
  -.266                                              .0000
  -.251      .1780
  -.241              .3910
  -.230                                              .0100
  -.225                      .5360
  -.198                              .1740
  -.168                                     -.0380
  -.133                                              .0000
   .000      .0000   .4140   .4810   .1540  -.0010   .0040
   .133                                              .0000
   .168                                      .0320
   .198                              .4540
   .225                      .7400
   .230                                              .0050
   .241              .5370
   .251      .4490
   .266                                              .0000
   .291                                      .0000
   .336                                      .0000
   .344                             -.0250
   .389                      .0000
   .397                              .0000
   .418              .0000
   .434      .1700
   .449                      .0000
   .482              .0000
   .502      .0000
```

CAL T14-053 IA36 O2 + T1 + S1 UPPER MPS NOZZLE (NUFA08)

MACH (1) = 1.199 BETA (3) = .000

SECTION (1)UPPER MPS NOZZLE DEPENDENT VARIABLE DELCP

X/DE	.0580	.2320	.4060	.5800	.7540	.9280
Y/DE						
-.502	.0000					
-.482		.0000				
-.449			.0000			
-.434	-.1060					
-.418		.3170				
-.397				.0000		
-.389			.1320			
-.344				-.1140		
-.336					.0000	
-.291					-.0450	
-.266						.0000
-.251	.0120					
-.241		.4690				
-.230						.0220
-.225			.5200			
-.198				.0280		
-.168					-.0440	
-.133						.0120
.000	.2910	.5000	.4930	.5480	.0070	-.0190
.133						-.0070
.168					.0540	
.198				.6550		
.225			.6660			
.230						-.0190
.241		.6380				
.251	.5000					
.266						.0000
.291					.0070	
.336					.0000	
.344				-.0230		
.389			-.0680			
.397				.0000		
.418		-.0470				
.434	.6130					
.449			.0000			
.482		.0000				
.502	.0000					

```
                               CAL T14-053 IA36 C2 + T1 + S1 UPPER MPS NOZZLE               (NUFACB)

MACH  ( 1) =    1.195    BETA  ( 4) =    3.049

 SECTION ( 1)UPPER MPS NOZZLE             DEPENDENT VARIABLE DELCP

X/DE        .0580   .2320   .4060   .5800   .7540   .9280

  Y/DE
   -.502    .0000
   -.482            .0000
   -.449                    .0000
   -.434   -.1460
   -.418            .0870
   -.397                            .0000
   -.389                   -.1400
   -.344                            .0060
   -.336                                    .0000
   -.291                                   -.0140
   -.266                                            .0000
   -.251   -.0590
   -.241            .6090
   -.230                                            .0320
   -.225                    .5890
   -.198                           -.1360
   -.168                                    .0120
   -.133                                            .0040
    .000    .4180   .6180   .5790   .6950   .1170  -.0790
    .133                                           -.0350
    .168                                    .0110
    .198                            .6310
    .225                    .6650
    .230                                           -.0100
    .241            .7200
    .251    .6490
    .266                                            .0000
    .291                                   -.0020
    .336                                    .0000
    .344                           -.0820
    .389                   -.0410
    .397                            .0000
    .418            .1940
    .434    .8430
    .449                    .0000
    .482            .0000
    .502    .0000
```

```
                              CAL T14-053 IA36 02 + T1 + S1 UPPER MPS NOZZLE              (NUFA08)

MACH  ( 1) =    1.197    BETA  ( 5) =    6.779

 SECTION ( 1)UPPER MPS NOZZLE                  DEPENDENT VARIABLE DELCP

X/DE          .0580    .2320    .4060    .5800    .7540    .9280

  Y/DE
  -.502     .0000
  -.482              .0000
  -.449                       .0000
  -.434    -.2060
  -.418             -.0950
  -.397                                .0000
  -.389                      -.1760
  -.344                               -.0420
  -.336                                         .0000
  -.291                                         .0070
  -.266                                                  .0000
  -.251    -.0990
  -.241              .7290
  -.230                                                  .0060
  -.225                       .6610
  -.198                               -.2190
  -.168                                        -.0540
  -.133                                                 -.0010
   .000     .5230    .7280    .6910    .6360    .5670   -.1070
   .133                                                 -.0280
   .168                                         .0170
   .198                                .6830
   .225                       .7810
   .230                                                 -.0060
   .241              .8970
   .251     .8700
   .266                                                  .0000
   .291                                         .0080
   .336                                         .0000
   .344                               -.1000
   .389                      -.0420
   .397                                .0000
   .418              .4900
   .434    1.1050
   .449                       .0000
   .482              .0000
   .502     .0000
```

```
DATE 05 NOV 75            TABULATED DATA FOR CAL T14-053 (IA36)                                                        PAGE  222

                                        CAL T14-053 IA36 02 + T1 + S1 LOWER LH MPS NOZ.             (NUFB01)   ( 18 DEC 73 )

             REFERENCE DATA                                                                          PARAMETRIC DATA

SREF  =    49.4000 SQ.FT.   XMRP  =   158.0000 INCHES                                   BETA   =      .000   POWER  =      .000
LREF  =    90.7000 INCHES   YMRP  =      .0000 INCHES                                   GP1    =    11.000   GY1    =    -9.000
BREF  =    90.7000 INCHES   ZMRP  =      .0000 INCHES                                   GP2    =      .000   GY2    =    -9.000
SCALE =      .0190 SCALE                                                                GP3    =      .000   GY3    =      .000

MACH  ( 1) =     .901    ALPHA ( 1) =   -8.088

 SECTION ( 1)LOWER LH MPS NOZ.                  DEPENDENT VARIABLE DELCP

X/DE        .0580   .2320   .4060   .5800   .7540   .9280

  Y/DE
   -.502    .0000
   -.482            .0000
   -.449                    .0000
   -.434    .0200
   -.418            .0090
   -.397                            .0000
   -.389                  -.0220
   -.344                          -.0140
   -.336                                    .0000
   -.291                                    .0120
   -.266                                            .0000
   -.251  -.0010
   -.241          -.0200
   -.230                                          -.0090
   -.225                    .0080
   -.198                          -.0180
   -.168                                  -.0220
   -.133                                            .0300
    .000  -.0090    .0050 -.0040    .0040 -.0020  -.0070
    .133                                          -.0260
    .168                                    .0170
    .198                            .0110
    .225                    .0020
    .230                                            .0050
    .241            .0070
    .251  -.0240
    .266                                            .0000
    .291                                  -.0120
    .336                                    .0000
    .344                            .0260
    .389                    .0390
    .397                            .0000
    .418          -.0080
    .434  -.0070
    .449                    .0000
    .482            .0000
    .502    .0000
```

```
                                 CAL T14-053 IA35 02 + T1 + S1 LOWER LH MPS NOZ.                 (NUFB01)
MACH  ( 1) =     .900    ALPHA ( 2) =    -4.049

 SECTION ( 1)LOWER LH MPS NOZ.                DEPENDENT VARIABLE DELCP

X/DE          .0580    .2320    .4060    .5800    .7540    .9280

  Y/DE
  -.502      .0000
  -.482               .0000
  -.449                        .0000
  -.434      .0060
  -.418               .0170
  -.397                                 .0000
  -.389                       -.0240
  -.344                                -.0090
  -.336                                          .0000
  -.291                                          .0090
  -.266                                                   .0000
  -.251     -.0070
  -.241               .0000
  -.230                                                  -.0140
  -.225                        .0140
  -.198                                -.0220
  -.169                                         -.0280
  -.133                                                   .0240
   .000     -.0040   -.0030    .0000    .0020   -.0030   -.0040
   .133                                                  -.0230
   .168                                          .0160
   .198                                 .0200
   .225                        .0010
   .230                                                   .0070
   .241              -.0040
   .251     -.0100
   .266                                                   .0000
   .291                                          .0000
   .336                                          .0000
   .344                                 .0170
   .389                        .0290
   .397                                 .0000
   .418              -.0100
   .434     -.0060
   .449                        .0000
   .482               .0000
   .502      .0000
```

```
                                      CAL T14-053 IA36 O2 + T1 + S1 LOWER LH MPS NOZ.          (NUFB01)

MACH  ( 1) =     .900    ALPHA ( 3) =     .013

 SECTION ( 1)LOWER LH MPS NOZ.                  DEPENDENT VARIABLE DELCP

X/DE          .0580    .2320    .4060    .5900    .7540    .9280

  Y/DE
   -.502      .0000
   -.482               .0000
   -.449                        .0000
   -.434      .0120
   -.418               .0190
   -.397                                 .0000
   -.383                      -.0300
   -.344                               -.0150
   -.336                                          .0000
   -.291                                          .0170
   -.266                                                   .0000
   -.251      .0150
   -.241              -.0080
   -.230                                                  -.0070
   -.225                        .0010
   -.198                               -.0190
   -.168                                        -.0270
   -.133                                                   .0360
    .000     -.0080    .0010  -.0040   -.0050    .0010     .0030
    .133                                                  -.0270
    .168                                          .0230
    .198                                 .0250
    .225                       -.0060
    .230                                                   .0100
    .241               .0120
    .251     -.0140
    .266                                                   .0000
    .291                                        -.0100
    .336                                          .0000
    .344                                 .0140
    .389                        .0300
    .397                                 .0000
    .418              -.0110
    .434      .0000
    .449                        .0000
    .482               .0000
    .502      .0000
```

```
DATE 05 NOV 75             TABULATED DATA FOR CAL T14-053 (IA36)                                                  PAGE  225

                                       CAL T14-053 IA36 02 + T1 + S1 LOWER LH MPS NOZ.              (NUFB01)

MACH  ( 1) =      .899    ALPHA ( 4) =     4.005

 SECTION ( 1)LOWER LH MPS NOZ.                   DEPENDENT VARIABLE DELCP

X/DE          .0580     .2320     .4060     .5800     .7540     .9280

  Y/DE
   -.502      .0000
   -.482                .0000
   -.449                          .0000
   -.434      .0150
   -.418                .0190
   -.397                                    .0000
   -.383                         -.0400
   -.344                                   -.0250
   -.335                                              .0000
   -.291                                              .0140
   -.266                                                        .0000
   -.251      .0050
   -.241               -.0070
   -.230                                                       -.0010
   -.225                          .0070
   -.198                                   -.0300
   -.168                                             -.0240
   -.133                                                        .0340
    .000     -.0120     .0050    -.0020    -.0040    -.0130     .0050
    .133                                                       -.0310
    .168                                              .0220
    .198                                    .0340
    .225                          .0030
    .230                                                        .0040
    .241               -.0020
    .251     -.0240
    .265                                                        .0000
    .291                                             -.0010
    .336                                              .0000
    .344                                    .0230
    .389                          .0410
    .397                                    .0000
    .418               -.0100
    .434     -.0230
    .449                          .0000
    .482                .0000
    .502      .0000
```

```
                                   CAL T14-053 IA36 02 + T1 + S1 LOWER LH MPS NOZ.          (NUFB01)

MACH  ( 1) =     .899   ALPHA ( 5) =    6.005

 SECTION ( 1)LOWER LH MPS NOZ.             DEPENDENT VARIABLE DELCP

X/DE        .0580   .2320   .4060   .5800   .7540   .9280

  Y/DE
  -.502     .0000
  -.482             .0000
  -.449                     .0000
  -.434     .0160
  -.418             .0280
  -.397                             .0000
  -.389                   -.0350
  -.344                           -.0010
  -.336                                     .0000
  -.291                                     .0330
  -.256                                             .0000
  -.251   -.0060
  -.241           -.0220
  -.230                                           -.0200
  -.225                     .0260
  -.198                           -.0170
  -.165                                   -.0260
  -.133                                             .0500
   .000   -.0070    .0000 -.0040    .0000   .0060   .0030
   .133                                           -.0500
   .168                                     .0210
   .198                             .0150
   .225                   -.0240
   .230                                             .0300
   .241             .0210
   .251   -.0020
   .266                                             .0000
   .291                                   -.0180
   .336                                     .0000
   .344                             .0070
   .389                     .0460
   .397                             .0000
   .418           -.0120
   .434   -.0100
   .449                     .0000
   .482             .0000
   .502     .0000
```

```
DATE 05 NOV 75          TABULATED DATA FOR CAL T14-053 (IA36)                                          PAGE  227

                                   CAL T14-053 IA36 02 + T1 + S1 LOWER LH MPS NOZ.        (NUFB02)   ( 18 DEC 73  )

              REFERENCE DATA                                                                  PARAMETRIC DATA

SREF  =    49.4000 SQ.FT.   XMRP  =   158.0000 INCHES                        ALPHA  =      .000   POWER  =      .000
LREF  =    90.7000 INCHES   YMRP  =      .0000 INCHES                        GP1    =    11.000   GY1    =    -9.000
BREF  =    90.7000 INCHES   ZMRP  =      .0000 INCHES                        GP2    =      .000   GY2    =    -9.000
SCALE =      .0190 SCALE                                                     GP3    =      .000   GY3    =      .000

MACH  ( 1) =      .901    BETA  ( 1) =    -6.079

 SECTION ( 1)LOWER LH MPS NOZ.               DEPENDENT VARIABLE DELCP

X/DE         .0580    .2320    .4060    .5800    .7540    .9280

  Y/DE
   -.502     .0000
   -.482              .0000
   -.449                       .0000
   -.434     .0210
   -.418              .0330
   -.397                                .0000
   -.389                     -.0320
   -.344                               -.0100
   -.336                                         .0000
   -.291                                         .0150
   -.266                                                  .0000
   -.251     .0090
   -.241             -.0040
   -.230                                                 -.0090
   -.225                       .0160
   -.198                               -.0330
   -.168                                        -.0120
   -.133                                                  .0180
    .000    -.0080    .0000    .0020    .0120   -.0120   -.0050
    .133                                                 -.0210
    .168                                         .0220
    .198                                .0310
    .225                     -.0110
    .230                                                  .0210
    .241              .0060
    .251    -.0060
    .266                                                  .0000
    .291                                         .0020
    .336                                         .0000
    .344                                .0070
    .389                       .0300
    .397                                .0000
    .418             -.0140
    .434    -.0320
    .449                       .0000
    .482              .0000
    .502     .0000
```

CAL T14-053 IA36 O2 + T1 + S1 LOWER LH MPS NOZ. (NUFB02)

MACH (1) = .900 BETA (2) = -3.049

SECTION (1)LOWER LH MPS NOZ. DEPENDENT VARIABLE DELCP

X/DE Y/DE	.0580	.2320	.4060	.5800	.7540	.9280
-.502	.0000					
-.482		.0000				
-.449			.0000			
-.434	.0180					
-.418		.0090				
-.397				.0000		
-.389			-.0300			
-.344				-.0040		
-.336					.0000	
-.291					.0170	
-.266						.0000
-.251	.0170					
-.241		-.0110				
-.230						-.0150
-.225			-.0030			
-.198				-.0110		
-.168					-.0190	
-.133						.0240
.000	-.0060	.0130	.0100	.0070	.0030	.0080
.133						-.0260
.168					.0180	
.198				.0230		
.225			.0070			
.230						.0120
.241		.0210				
.251	.0040					
.266						.0000
.291					-.0030	
.336					.0000	
.344				.0270		
.389			.0380			
.397				.0000		
.418		.0020				
.434	-.0010					
.449			.0000			
.482		.0000				
.502	.0000					

```
                    CAL T14-053 IA36 02 + T1 + S1 LOWER LH MPS NOZ.          (NUFB02)
MACH  ( 1) =     .901    BETA  ( 3) =     .000
 SECTION ( 1)LOWER LH MPS NOZ.            DEPENDENT VARIABLE DELCP
X/DE        .0580    .2320    .4060    .5800    .7540    .9280

  Y/DE
   -.502    .0000
   -.482             .0000
   -.449                      .0000
   -.434    .0240
   -.418             .0170
   -.397                               .0000
   -.389                     -.0350
   -.344                              -.0070
   -.336                                        .0000
   -.291                                        .0100
   -.266                                                 .0000
   -.251    .0140
   -.241            -.0030
   -.230                                                -.0060
   -.225                      .0020
   -.198                              -.0250
   -.168                                       -.0140
   -.133                                                 .0280
    .000   -.0060    .0040    .0100   -.0040   -.0020    .0010
    .133                                                -.0350
    .168                                        .0170
    .198                               .0240
    .225                      .0070
    .230                                                -.0010
    .241             .0000
    .251   -.0130
    .266                                                 .0000
    .291                                       -.0020
    .336                                        .0000
    .344                               .0230
    .389                      .0350
    .397                               .0000
    .418            -.0020
    .434   -.0110
    .449                      .0000
    .482             .0000
    .502    .0000
```

```
DATE 25 NOV 75             TABULATED DATA FOR CAL T14-053 (IA36)                                                    PAGE  230

                                      CAL T14-053 IA36 O2 + T1 + S1 LOWER LH MPS NOZ.               (NUFB02)

MACH  ( 1) =     .900    BETA  ( 4) =    3.051

 SECTION ( 1)LOWER LH MPS NOZ.                DEPENDENT VARIABLE DELCP

X/DE         .0580   .2320   .4060   .5800   .7540   .9280

  Y/DE
  -.502     .0000
  -.482             .0000
  -.449                     .0000
  -.434     .0020
  -.418             .0030
  -.397                             .0000
  -.389                    -.0310
  -.344                            -.0140
  -.336                                     .0000
  -.291                                     .0120
  -.266                                             .0000
  -.251     .0010
  -.241            -.0230
  -.230                                            -.0110
  -.225                     .0010
  -.192                            -.0220
  -.168                                    -.0170
  -.133                                             .0270
   .000    -.0020   .0090  -.0030  -.0130   .0010   .0020
   .133                                            -.0290
   .168                                     .0140
   .198                             .0150
   .225                    -.0110
   .230                                             .0080
   .241             .0060
   .251    -.0100
   .265                                             .0000
   .291                                    -.0130
   .336                                     .0000
   .344                             .0080
   .383                     .0300
   .397                             .0000
   .418            -.0120
   .434    -.0120
   .449                     .0000
   .482             .0000
   .502     .0000
```

```
DATE 05 NOV 75            TABULATED DATA FOR CAL T14-053 (IA36)                                              PAGE  231

                                   CAL T14-053 IA36 02 + T1 + S1 LOWER LH MPS NOZ.                  (NUFB02)

MACH  ( 1) =      .901    BETA  ( 5) =    6.089

 SECTION ( 1)LOWER LH MPS NOZ.               DEPENDENT VARIABLE DELCP

X/DE         .0580   .2320   .4060   .5800   .7540   .9280

  Y/DE
  -.502     .0000
  -.482             .0000
  -.449                     .0000
  -.434     .0010
  -.418             .0000
  -.397                             .0000
  -  39                    -.0280
  -.344                             .0040
  -.335                                     .0000
  -.291                                     .0020
  -.265                                             .0000
  -.251    -.0130
  -.241            -.0190
  -.230                                            -.0170
  -.225                     .0080
  -.198                            -.0400
  -.168                                    -.0140
  -.133                                             .0210
   .000    -.0070   .0080  -.0120  -.0180  -.0140  -.0150
   .133                                            -.0240
   .168                                    -.0030
   .199                             .0150
   .225                    -.0120
   .230                                             .0120
   .241            -.0010
   .251    -.0040
   .266                                             .0000
   .291                                    -.0060
   .336                                     .0000
   .344                             .0040
   .389                     .0160
   .397                             .0000
   .418            -.0020
   .434    -.0290
   .449                     .0000
   .482             .0000
   .502     .0000
```

```
DATE 05 NOV 75             TABULATED DATA FOR CAL T14-053 (IA36)

                                      CAL T14-053 IA36 02 + T1 + S1 LOWER LH MPS NOZ.                    (NUFB03)    ( 18 DEC 73  )

                  REFERENCE DATA                                                                         PARAMETRIC DATA

SREF  =      49.4000 SQ.FT.   XMRP  =   158.0000 INCHES                                   BETA   =      .000   POWER  =      1.000
LREF  =      90.7000 INCHES   YMRP  =      .0000 INCHES                                   OPR    =    36.200   SRMPR  =      2.330
BREF  =      90.7000 INCHES   ZMRP  =      .0000 INCHES                                   GP1    =    11.000   GY1    =     -9.000
SCALE =        .0190 SCALE                                                                GP2    =      .000   GY2    =     -9.000
                                                                                          GP3    =      .000   GY3    =     -9.000

MACH  ( 1) =      .897   ALPHA ( 1) =    -8.088

 SECTION ( 1)LOWER LH MPS NOZ.              DEPENDENT VARIABLE DELCP

X/DE          .0580    .2320    .4060    .5800    .7540    .9280

  Y/DE
  -.502       .0000
  -.482                .0000
  -.449                         .0000
  -.434       .0340
  -.418                .0220
  -.397                                  .0000
  -.389                        -.0520
  -.344                                 -.0310
  -.336                                           .0000
  -.291                                           .0530
  -.266                                                    .0000
  -.251       .0120
  -.241               -.0340
  -.230                                                    .0150
  -.225                         .0000
  -.198                                 -.0110
  -.168                                          -.0070
  -.133                                                    .0580
   .000      -.0290    .0050    .0100    .0000   -.0020   -.0100
   .133                                                   -.0710
   .168                                          -.0020
   .198                                  .0130
   .225                         .0180
   .230                                                   -.0170
   .241                .0610
   .251      -.0570
   .266                                                    .0000
   .291                                          -.0580
   .336                                           .0000
   .344                                  .0250
   .389                         .0760
   .397                                  .0000
   .418                .0010
   .434      -.0070
   .449                         .0000
   .482                .0000
   .502       .0000
```

CAL T14-053 IA36 O2 + T1 + S1 LOWER LH MPS NOZ. (NUFB03)

MACH (1) = .899 ALPHA (2) = -4.038

SECTION (1)LOWER LH MPS NOZ DEPENDENT VARIABLE DELCP

X/DE	.0580	.2320	.4060	.5800	.7540	.9280
Y/DE						
-.502	.0000					
-.482		.0000				
-.449			.0000			
-.434	.0380					
-.418		.0070				
-.397				.0000		
-.389			.0040			
-.344				-.0180		
-.336					.0000	
-.291					-.0050	
-.266						.0000
-.251	.0270					
-.241		.0300				
-.230						.0250
-.225			-.0050			
-.198				-.0210		
-.168					.0030	
-.133						.0110
.000	-.0150	.0100	.0010	.0040	.0000	-.0030
.133						-.0110
.168					.0080	
.198				.0190		
.225			.0230			
.230						-.0160
.241		-.0200				
.251	-.0310					
.266						.0000
.291					.0130	
.336					.0000	
.344				.0110		
.389			.0070			
.397				.0000		
.418		-.0030				
.434	-.0220					
.449			.0000			
.482		.0000				
.502	.0000					

```
                                    CAL T14-053 IA36 02 + T1 + S1 LOWER LH MPS NOZ.             (NUFB03)

MACH  ( 1) =      .901    ALPHA ( 3) =      .001

 SECTION ( 1)LOWER LH MPS NOZ.              DEPENDENT VARIABLE DELCP

X/DE          .0580   .2320   .4060   .5800   .7540   .9280

  Y/DE
   -.502      .0000
   -.482              .0000
   -.449                      .0000
   -.434      .0180
   -.418              .0120
   -.397                              .0000
   -.389                     -.0010
   -.344                             -.0220
   -.336                                      .0000
   -.291                                      .0030
   -.266                                              .0000
   -.251      .0170
   -.241              .0210
   -.230                                              .0130
   -.225                     -.0080
   -.198                             -.0110
   -.168                                     -.0050
   -.133                                              .0030
    .000     -.0140   .0020  -.0020   .0010  -.0080  -.0090
    .133                                             -.0080
    .168                                      .0010
    .198                              .0060
    .225                      .0150
    .230                                             -.0110
    .241             -.0280
    .251     -.0370
    .266                                              .0000
    .291                                      .0130
    .336                                      .0000
    .344                              .0210
    .389                     -.0130
    .397                              .0000
    .418             -.0140
    .434     -.0080
    .449                      .0000
    .482              .0000
    .502      .0000
```

```
DATE 05 NOV 75            TABULATED DATA FOR CAL T14-053 (IA36)                                         PAGE  235
                                          CAL T14-053 IA36 C2 + T1 + S1 LOWER LH MPS NOZ.              (NUFB03)
MACH  ( 1) =      .902    ALPHA ( 4) =     4.026
 SECTION ( 1)LOWER LH MPS NOZ.                  DEPENDENT VARIABLE DELCP
X/DE         .0580   .2320   .4060   .5800   .7540   .9280

  Y/DE
   -.502     .0000
   -.482             .0000
   -.449                     .0000
   -.434     .0280
   -.418             .0130
   -.397                             .0000
   -.389                    -.0060
   -.344                            -.0320
   -.336                                     .0000
   -.291                                    -.0150
   -.266                                             .0000
   -.251     .0210
   -.241             .0290
   -.230                                             .0090
   -.225                    -.0070
   -.193                            -.0260
   -.169                                    -.0190
   -.133                                             .0070
    .000    -.0130   .0020  -.0040  -.0070  -.0050  -.0040
    .133                                            -.0080
    .168                                    -.0020
    .138                             .0130
    .225                     .0050
    .230                                            -.0100
    .241            -.0300
    251     -.0320
    .266                                             .0000
    .291                                     .0280
    .336                                     .0000
    .344                             .0180
    .389                    -.0100
    .397                             .0000
    .418            -.0160
    .434    -.0300
    .449                     .0000
    .482             .0000
    .502     .0000
```

REPRODUCIBILITY OF THE
ORIGINAL PAGE IS POOR

```
DATE 05 NOV 75            TABULATED DATA FOR CAL T14-053 (IA36)

                                    CAL T14-053 IA36 02 + T1 + S1 LOWER LH MPS NOZ.          (NUFB03)

MACH  ( 1) =     .898    ALPHA ( 5) =    6.021

 SECTION ( 1)LOWER LH MPS NOZ.              DEPENDENT VARIABLE DELCP

X/DE         .0580    .2320    .4060    .5800    .7540    .9280

  Y/DE
  -.502      .0000
  -.482               .0000
  -.449                        .0000
  -.434     -.0090
  -.418               .0110
  -.397                                 .0000
  -.389                       -.0430
  -.344                                -.0210
  -.336                                          .0000
  -.291                                          .0450
  -.266                                                   .0000
  -.251      .0110
  -.241              -.0340
  -.230                                                   .0090
  -.225                       -.0050
  -.198                                 .0010
  -.168                                         -.0200
  -.133                                                   .0350
   .000     -.0100    .0080   -.0060   -.0100   -.0160   -.0070
   .133                                                  -.0370
   .168                                         -.0010
   .198                                -.0160
   .225                        .0020
   .230                                                  -.0090
   .241               .0290
   .251     -.0260
   .266                                                   .0000
   .291                                         -.0410
   .336                                          .0000
   .344                                 .0160
   .389                        .0240
   .397                                 .0000
   .418              -.0060
   .434      .0100
   .449                        .0000
   .482               .0000
   .502      .0000
```

```
                                 CAL T14-053 IA36 02 + T1 + S1 LOWER LH MPS NOZ.              (NUFB04)    ( 18 DEC 73  )

              REFERENCE DATA                                                                PARAMETRIC DATA

SREF  =    49.4000 SQ.FT.   XMRP  =   158.0000 INCHES                        ALPHA  =      .000   POWER  =     1.000
LREF  =    90.7000 INCHES   YMRP  =      .0000 INCHES                        CPR    =    35.200   SPMPR  =     2.330
BREF  =    90.7000 INCHES   ZMRP  =      .0000 INCHES                        GP1    =    11.000   GY1    =    -9.000
SCALE =      .0190 SCALE                                                     GP2    =      .000   GY2    =    -9.000
                                                                             GP3    =      .000   GY3    =    -9.000

MACH  ( 1) =     .893    BETA  ( 1) =   -6.078

 SECTION ( 1)LOWER LH MPS NOZ.                DEPENDENT VARIABLE DELCP

X/DE         .0580    .2320    .4060    .5800    .7540    .9280

  Y/DE
  -.502      .0000
  -.482               .0000
  -.449                        .0000
  -.434      .0090
  -.418               .0340
  -.397                                 .0000
  -.389                        .0020
  -.344                                -.0090
  -.336                                          .0000
  -.291                                          .0110
  -.266                                                   .0000
  -.251     -.0170
  -.241              -.0070
  -.230                                                   .0070
  -.225                       -.0050
  -.198                                -.0220
  -.168                                          .0000
  -.133                                                   .0220
   .000     -.1290   -.0220   -.0090    .0070    .0010   -.0010
   .133                                                  -.0270
   .168                                          .0330
   .198                                 .0420
   .225                        .0150
   .230                                                  -.0100
   .241              -.0170
   .251     -.0730
   .266                                                   .0000
   .291                                          .0070
   .336                                          .0000
   .344                                 .0370
   .389                        .0340
   .397                                 .0000
   .418               .0080
   .434     -.0030
   .449                        .0000
   .482               .0000
   .502      .0000
```

```
                                        CAL T14-053 IA36 O2 + T1 + S1 LOWER LH MPS NOZ.               (NUFB04)
MACH  ( 1) =     .900    BETA  ( 2) =   -3.049
 SECTION ( 1)LOWER LH MPS NOZ.              DEPENDENT VARIABLE DELCP
X/DE         .0580   .2320   .4060   .5800   .7540   .9280

  Y/DE
   -.502     .0000
   -.482             .0000
   -.449                     .0000
   -.434     .0150
   -.418             .0200
   -.397                             .0000
   -.389                    -.0030
   -.344                            -.0110
   -.336                                     .0000
   -.291                                      0140
   -.266                                             .0000
   -.251    -.0020
   -.241            -.0070
   -.230                                             .0060
   -.225                    -.0070
   -.190                            -.0110
   -.168                                    -.0030
   -.133                                             .0330
    .000    -.0840  -.0060   .0060   .0010  -.0010  -.0010
    .133                                            -.0280
    .168                                     .0020
    .198                             .0290
    .225                     .0250
    .230                                            -.0170
    .241            -.0030
    .251    -.0370
    .266                                             .0000
    .291                                    -.0030
    .336                                     .0000
    .344                             .0170
    .389                     .0340
    .397                             .0000
    .418             .0200
    .434    -.0090
    .443                     .0000
    .467             .0000
    .502     .0000
```

```
DATE 05 NOV 75            TABULATED DATA FOR CAL T14-053 (IA36)                                            PAGE  239

                                     CAL T14-053 IA36 02 + T1 + S1 LOWER LH MPS NOZ.                 (NUFB04)

MACH  ( 1) =      .899   BETA  ( 3) =      .000

 SECTION ( 1)LOWER LH MPS NOZ.                DEPENDENT VARIABLE DELCP

X/DE       .0580   .2320   .4060   .5800   .7540   .9280

  Y/DE
   -.502   .0000
   -.482           .0000
   -.449                   .0000
   -.434   .0320
   -.418           .0170
   -.397                           .0000
   -.380                  -.0150
   -.344                          -.0270
   -.336                                   .0000
   -.291                                   .0090
   -.266                                           .0000
   -.251   .0100
   -.241           .0000
   -.230                                           .0110
   -.225                  -.0030
   -.198                          -.0230
   -.168                                  -.0150
   -.133                                           .0330
    .000  -.0270   .0070   .0030  -.0020  -.0100  -.0090
    .133                                          -.0290
    .168                                  -.0010
    .198                           .0080
    .225                   .0130
    .230                                          -.0220
    .241           .0060
    .251  -.0340
    .266                                           .0000
    .291                                  -.0040
    .336                                   .0000
    .344                           .0180
    .389                   .0130
    .397                           .0000
    .418          -.0130
    .434  -.0200
    .449                   .0000
    .482           .0000
    .502   .0000
```

```
                                   CAL T14-053 IA36 02 + T1 + S1 LOWER LH MPS NOZ.          (NUFB04)

MACH  ( 1) =     .898   BETA  ( 4) =    3.051

 SECTION ( 1)LOWER LH MPS NOZ.             DEPENDENT VARIABLE DELCP

X/DE         .0580    .2320    .4060    .5800    .7540    .9280

  Y/DE
    -.502    .0000
    -.482             .0000
    -.449                      .0000
    -.434    .0540
    -.418            -.0020
    -.397                               .0000
    -.389                     -.0310
    -.344                              -.0150
    -.336                                        .0000
    -.291                                       -.0130
    -.266                                                 .0000
    -.251    .0270
    -.241             .0090
    -.230                                                 .0180
    -.225                     -.0240
    -.198                              -.0390
    -.168                                        .0060
    -.133                                                 .0240
     .000   -.0120    .0030   -.0080   -.0090   -.0010    .0020
     .133                                                -.0330
     .168                                       -.0030
     .198                               .0320
     .225                      .0190
     .230                                                -.0230
     .241            -.0080
     .251   -.0350
     .266                                                 .0000
     .291                                        .0140
     .336                                        .0000
     .344                               .0170
     .389                      .0330
     .397                               .0000
     .418             .0030
     .434   -.0370
     .449                      .0000
     .482             .0000
     .502    .0000
```

```
                                 CAL T14-053 IA36 02 + T1 + S1 LOWER LH MPS NOZ.               (NUFB04)

MACH  ( 1) =     .899    BETA  ( 5) =     6.088

 SECTION ( 1)LOWER LH MPS NOZ.               DEPENDENT VARIABLE DELCP

X/DE         .0580   .2320   .4060   .5800   .7540   .9280

  Y/DE
   -.502     .0000
   -.482             .0000
   -.449                     .0000
   -.434     .0340
   -.418            -.0030
   -.397                             .0000
   -.389                    -.0180
   -.344                            -.0220
   -.336                                     .0000
   -.291                                    -.0130
   -.266                                             .0000
   -.251     .0140
   -.241             .0200
   -.230                                             .0180
   -.225                    -.0180
   -.198                            -.0290
   -.168                                     .0050
   -.133                                              0170
    .000    -.0090   .0070   .0030  -.0040   .0020  -.0080
    .133                                            -.0210
    .168                                    -.0130
    .198                             .0120
    .225                     .0220
    .230                                            -.0280
    .241            -.0210
    .251    -.0580
    .266                                             .0000
    .291                                     .0110
    .336                                     .0000
    .344                             .0080
    .389                     .0120
    .397                             .0000
    .418             .0130
    .434    -.0230
    .449                     .0000
    .482             .0000
    .502     .0000
```

```
                                  CAL T14-053 IA36 02 + T1 + S1 LOWER LH MPS NOZ.             (NUFB05)   ( 18 DEC 73  )

             REFERENCE DATA                                                                         PARAMETRIC DATA

SREF  =    49.4000 SQ.FT.   XMRP  =   158.0000 INCHES                      BETA    =      .000   POWER  =      .000
LREF  =    90.7000 INCHES   YMRP  =      .0000 INCHES                      GP1     =    11.000   GY1    =    -9.000
BREF  =    90.7000 INCHES   ZMRP  =      .0000 INCHES                      GP2     =      .000   GY2    =    -9.000
SCALE =      .0190 SCALE                                                   GP3     =      .000   GY3    =      .000

MACH  ( 1) =     1.203     ALPHA ( 1) =    -8.101

 SECTION ( 1)LOWER LH MPS NOZ.                DEPENDENT VARIABLE DELCP

X/DE          .0580     .2320     .4060     .5800     .7540     .9280

  Y/DE
   -.502      .0000
   -.482                .0000
   -.449                          .0000
   -.434     -.0080
   -.418                .0180
   -.397                                    .0000
   -.389                         -.0300
   -.344                                   -.0180
   -.336                                              .0000
   -.291                                              .0170
   -.266                                                        .0000
   -.251      .0130
   -.241               -.0230
   -.230                                                       -.0050
   -.225                          .0030
   -.198                                   -.0040
   -.168                                             -.0240
   -.133                                                       -.0070
    .000     -.0230    -.0110    -.0070    -.0020    -.0070    -.0080
    .133                                                       -.0110
    .168                                              .0190
    .198                                   -.0060
    .225                         -.0160
    .230                                                        .0220
    .241                .0110
    .251      .0000
    .266                                                        .0000
    .291                                             -.0130
    .336                                              .0000
    .344                                    .0090
    .389                         -.0030
    .397                                    .0000
    .418               -.0250
    .434      .0150
    .449                          .0000
    .482                .0000
    .502      .0000
```

```
                        CAL T14-053 IA36 02 + T1 + S1 LOWER LH MPS NOZ.          (NUFB05)

MACH  ( 1) =    1.202    ALPHA ( 2) =    -4.038

 SECTION ( 1)LOWER LH MPS NOZ.          DEPENDENT VARIABLE DELCP

X/DE        .0580    .2320    .4060    .5800    .7540    .9280

  Y/DE
   -.502    .0000
   -.482             .0000
   -.449                      .0000
   -.434   -.0110
   -.418             .0180
   -.337                               .0000
   -.399                     -.0400
   -.344                              -.0240
   -.335                                        .0000
   -.291                                        .0290
   -.266                                                 .0000
   -.251    .0130
   -.241            -.0320
   -.230                                                -.0090
   -.225                     -.0010
   -.198                              -.0090
   -.168                                       -.0310
   -.133                                                 .0150
    .000   -.0120    .0000   -.0100   -.0060   -.0110   -.0130
    .133                                                -.0280
    .168                                        .0030
    .198                              -.0160
    .225                     -.0150
    .230                                                 .0150
    .241             .0120
    .251   -.0030
    .266                                                 .0000
    .291                                       -.0270
    .336                                        .0000
    .344                               .0050
    .389                      .0100
    .397                               .0000
    .418            -.0090
    .434    .0130
    .449                      .0000
    .462             .0000
    .502    .0000
```

```
DATE 05 NOV 75            TABULATED DATA FOR CAL T14-053 (IA36)                                              PAGE  244

                                   CAL T14-053 IA36 02 + T1 + S1 LOWER LH MPS NOZ.                 (NUFB05)

MACH  ( 1) =    1.203    ALPHA ( 3) =     -.011

 SECTION ( 1)LOWER LH MPS NOZ.               DEPENDENT VARIABLE DELCP

X/DE         .0580   .2320   .4060   .5800   .7540   .9280

  Y/DE
   -.502     .0000
   -.482             .0000
   -.449                     .0000
   -.434    -.0050
   -.418             .0150
   -.397                             .0000
   -.389                    -.0440
   -.344                            -.0230
   -.336                                     .0000
   -.291                                     .0310
   -.266                                             .0000
   -.251     .0070
   -.241            -.0360
   -.230                                            -.0090
   -.225                     .0040
   -.198                            -.0080
   -.168                                    -.0310
   -.133                                             .0050
    .000    -.0060  -.0020  -.0060  -.0140  -.0140  -.0140
    .133                                            -.0300
    .168                                     .0040
    .198                            -.0140
    .225                    -.0250
    .230                                             .0160
    .241             .0170
    .251    -.0020
    .266                                             .0000
    .291                                    -.0310
    .336                                     .0000
    .344                            -.0040
    .389                     .0110
    .397                             .0000
    .418            -.0120
    .434     .0090
    .449                     .00
    .482             .0000
    .502     .0000
```

```
                                   CAL T14-053 IA35 02 + T1 + S1 LOWER LH MPS NOZ.             (NUFB05)

MACH  ( 1) =    1.203    ALPHA ( 4) =     4.003

 SECTION ( 1)LOWER LH MPS NOZ.             DEPENDENT VARIABLE DELCP

X/DE        .0580   .2320   .4060   .5800   .7540   .9280

  Y/DE
   -.502    .0000
   -.482            .0000
   -.449                    .0000
   -.434   -.0090
   -.418            .0280
   -.397                            .0000
   -.389                   -.0320
   -.344                           -.0260
   -.336                                    .0000
   -.291                                    .0290
   -.266                                            .0000
   -.251    .0100
   -.241           -.0430
   -.230                                           -.0060
   -.225                   -.0050
   -.198                            .0020
   -.168                                   -.0340
   -.133                                           -.0040
    .000   -.0320  -.0110  -.0120  -.0130  -.0170  -.0100
    .133                                           -.0210
    .168                                    .0060
    .198                           -.0260
    .225                   -.0260
    .230                                            .0100
    .241            .0130
    .251   -.0030
    .266                                            .0000
    .291                                   -.0280
    .336                                    .0000
    .344                           -.0060
    .389                    .0010
    .397                            .0000
    .418           -.0100
    .434    .0140
    .449                    .0000
    .482            .0000
    .502    .0000
```

```
                    CAL T14-053 IA36 02 + T1 + S1 LOWER LH MPS NOZ.          (NJF805)

MACH  ( 1) =    1.202    ALPHA ( 5) =    6.018

 SECTION ( 1)LOWER LH MPS NOZ.              DEPENDENT VARIABLE DELCP

X/DE        .0580    .2320    .4060    .5800    .7540    .9280

  Y/DE
   -.502    .0000
   -.482             .0000
   -.449                      .0000
   -.434   -.0130
   -.418             .0200
   -.397                               .0000
   -.389                     -.0430
   -.344                              -.0360
   -.336                                        .0000
   -.291                                        .0320
   -.266                                                 .0000
   -.251    .0150
   -.241            -.0540
   -.230                                                -.0020
   -.225                     -.0090
   -.198                              -.0090
   -.168                                       -.0360
   -.133                                                 .0100
    .000   -.0210   -.0180   -.0160   -.0160   -.0200   -.0120
    .133                                                -.0310
    .168                                       -.0010
    .198                              -.0250
    .225                     -.0180
    .230                                                 .0030
    .241             .0170
    .251   -.0060
    .266                                                 .0000
    .291                                       -.0380
    .336                                        .0000
    .344                               .0050
    .389                      .0200
    .397                               .0000
    .418            -.0190
    .434    .0150
    .449                      .0000
    .482             .0000
    .502    .0000
```

```
                                      CAL T14-053 IA36 02 + T1 + S1 LOWER LH MPS NOZ.            (NUFB06)   ( 18 DEC 73  )

           REFERENCE DATA                                                                     PARAMETRIC DATA

SREF  =    49.4000 SQ.FT.   XMRP  =   158.0000 INCHES                              ALPHA  =      .000  POWER  =      .000
LREF  =    90.7000 INCHES   YMRP  =      .0000 INCHES                              GP1    =    11.000  GY1    =    -9.000
BREF  =    90.7000 INCHES   ZMRP  =      .0000 INCHES                              GP2    =      .000  GY2    =    -9.000
SCALE =      .0190 SCALE                                                           GP3    =      .000  GY3    =      .000

MACH  ( 1) =    1.202    BETA  ( 1) =   -6.079

 SECTION ( 1)LOWER LH MPS NOZ.              DEPENDENT VARIABLE DELCP

X/DE       .0580     .2320     .4060     .5800     .7540     .9280

  Y/DE
  -.502    .0000
  -.482              .0000
  -.449                        .0000
  -.434    .0020
  -.418              .0190
  -.397                                  .0000
  -.389                       -.0300
  -.344                                 -.0190
  -.336                                            .0000
  -.291                                            .0190
  -.266                                                      .0000
  -.251    .0020
  -.241             -.0290
  -.230                                                     -.0080
  -.225                        .0000
  -.198                                 -.0080
  -.168                                           -.0260
  -.133                                                      .0110
   .000    .0050    -.0090    -.0070    -.0080    -.0050    -.0070
   .133                                                     -.0140
   .168                                            .0090
   .198                                 -.0030
   .225                       -.0180
   .230                                                      .0140
   .241              .0130
   .251   -.0030
   .266                                                      .0000
   .291                                           -.0180
   .336                                            .0000
   .344                                 -.0030
   .369                        .0050
   .397                                  .0000
   .418             -.0110
   .434    .0040
   .449                        .0000
   .482              .0000
   .502    .0000
```

```
                                  CAL T14-053 IA36 O2 + T1 + S1 LOWER LH MPS NOZ.            (NUFB06)

MACH  ( 1) =    1.202    BETA  ( 2) =    -3.051

 SECTION ( 1)LOWER LH MPS NOZ.              DEPENDENT VARIABLE DELCP

X/DE         .0580     .2320     .4060     .5800     .7540     .9280

    Y/DE
   -.502     .0000
   -.482               .0000
   -.449                         .0000
   -.434     .0050
   -.418               .0130
   -.397                                   .0000
   -.389                        -.0350
   -.344                                  -.0150
   -.336                                             .0000
   -.291                                             .0190
   -.266                                                       .0000
   -.251     .0020
   -.241              -.0260
   -.230                                                      -.0100
   -.225                         .0010
   -.198                                  -.0070
   -.168                                            -.0190
   -.133                                                       .0120
    .000    -.0080    -.0110    -.0070    -.0070    -.0140    -.0120
    .133                                                      -.0210
    .168                                            -.0040
    .198                                  -.0080
    .225                        -.0250
    .230                                                       .0170
    .241               .0140
    .251     .0030
    .266                                                       .0000
    .291                                            -.0220
    .336                                             .0000
    .344                                  -.0140
    .389                         .0070
    .397                                   .0000
    .418              -.0060
    .434     .0050
    .449                         .0000
    .482               .0000
    .502     .0000
```

REPRODUCIBILITY OF THE
ORIGINAL PAGE IS POOR

```
DATE 05 NOV 75          TABULATED DATA FOR CAL T14-053 (IA36)                                        PAGE  249

                              CAL T14-053 IA36 02 + T1 + S1 LOWER LH MPS NOZ.             (NUFB06)

MACH  ( 1) =    1.202    BETA  ( 3) =     .000

 SECTION ( 1)LOWER LH MPS NOZ.              DEPENDENT VARIABLE DELCP

X/DE         .0580   .2320   .4060   .5800   .7540   .9280

  Y/DE
   -.502     .0000
   -.482             .0030
   -.449                     .0000
   -.434     .0000
   -.418             .0150
   -.397                             .0000
   -.389                    -.0370
   -.344                            -.0190
   -.336                                     .0000
   -.291                                     .0000
   -.266                                             .0000
   -.251     .0110
   -.241             .0000
   -.230                                            -.0050
   -.225                    -.0030
   -.198                             .0000
   -.168                                    -.0220
   -.133                                             .0180
    .000     .0090  -.0060   .0000  -.0090  -.0070  -.0130
    .133                                            -.0210
    .168                                    -.0040
    .198                             .0000
    .225                    -.0220
    .230                                             .0120
    .241             .0000
    .251     .0030
    .266                                             .0000
    .291                                     .0000
    .336                                     .0000
    .344                            -.0100
    .389                     .0120
    .397                             .0000
    .418            -.0090
    .434     .0000
    .449                     .0000
    .482             .0000
    .502     .0000
```

```
DATE 05 NOV 75            TABULATED DATA FOR CAL T14-053 (IA36)                                                  PAGE  250

                                 CAL T14-053 IA36 02 + T1 + S1 LOWER LH MPS NOZ.                  (NUFB06)

MACH  ( 1) =     1.203    BETA  ( 4) =     3.051

 SECTION ( 1)LOWER LH MPS NOZ.              DEPENDENT VARIABLE DELCP

X/DE          .0580     .2320     .4060     .5800     .7540     .9280

  Y/DE
     -.502     .0000
     -.482              .0000
     -.449                        .0000
     -.434    -.0080
     -.418              .0150
     -.397                                  .0000
     -.389                       -.0320
     -.344                                 -.0170
     -.336                                            .0000
     -.291                                            .0330
     -.266                                                      .0000
     -.251     .0080
     -.241             -.0370
     -.230                                                     -.0150
     -.225                       -.0010
     -.198                                 -.0020
     -.168                                           -.0340
     -.133                                                      .0120
      .000    -.0040   -.0190    -.0090    -.0140    -.0100    -.0150
      .133                                                     -.0240
      .168                                            .0000
      .198                                 -.0170
      .225                       -.0240
      .230                                                      .0160
      .241              .0120
      .251    -.0060
      .266                                                      .0000
      .291                                           -.0280
      .336                                            .0000
      .344                                 -.0060
      .389                        .0100
      .397                                  .0000
      .418              .0030
      .434     .0300
      .449                        .0000
      .482              .0000
      .502     .0000
```

```
                         CAL T14-053 IA36 O2 + T1 + S1 LOWER LH MPS NOZ.           (NUFB06)

MACH  ( 1) =    1.203    BETA  ( 5) =    6.079

 SECTION ( 1)LOWER LH MPS NOZ.             DEPENDENT VARIABLE DELCP

X/DE        .0580    .2320    .4060    .5800    .7540    .9280

  Y/DE
  -.502     .0000
  -.482              .0000
  -.449                       .0000
  -.434    -.0090
  -.418              .0200
  -.397                                .0000
  -.389                      -.0260
  -.344                               -.0210
  -.336                                         .0000
  -.291                                         .0210
  -.266                                                  .0000
  -.251    -.0130
  -.241             -.0280
  -.230                                                 -.0130
  -.225                      -.0030
  -.198                               -.0130
  -.168                                        -.0310
  -.133                                                  .0150
   .000     .0060   -.0210   -.0160   -.0130   -.0130   -.0120
   .133                                                 -.0200
   .168                                         .0050
   .198                               -.0220
   .225                      -.0230
   .230                                                  .0120
   .241              .0060
   .251    -.0150
   .266                                                  .0000
   .291                                        -.0200
   .336                                         .0000
   .344                               -.0020
   .389                       .0010
   .397                                .0000
   .418             -.0010
   .434     .0270
   .449                       .0000
   .482              .0000
   .502     .0000
```

```
                              CAL T14-053 IA36 02 + T1 + S1 LOWER LH MPS NOZ.              (NUFB07)    ( 18 DEC 73 )

              REFERENCE DATA                                                                  PARAMETRIC DATA

SREF  =    49.4000 SQ.FT.   XMRP  =   158.0000 INCHES                     BETA   =      .000   POWER  =    1.000
LREF  =    90.7000 INCHES   YMRP  =      .0000 INCHES                     OPR    =    28.310   SRMPR  =    2.020
BREF  =    90.7000 INCHES   ZMRP  =      .0000 INCHES                     GP1    =    11.000   GY1    =   -9.000
SCALE =      .0190 SCALE                                                  GP2    =      .000   GY2    =   -9.000
                                                                          GP3    =      .000   GY3    =   -9.000

MACH  ( 1) =    1.199    ALPHA ( 1) =    -8.108

 SECTION ( 1)LOWER LH MPS NOZ.                  DEPENDENT VARIABLE DELCP

X/DE          .0580    .2320    .4060    .5800    .7540    .9280

  Y/DE
   -.502      .0000
   -.482               .0000
   -.449                        .0000
   -.434     -.0380
   -.418               .0260
   -.397                                 .0000
   -.389                       -.0150
   -.344                                -.0010
   -.336                                          .0000
   -.291                                          .0290
   -.266                                                   .0000
   -.251     -.0380
   -.241              -.0290
   -.230                                                  -.0070
   -.225                        .0220
   -.198                                 .0130
   -.168                                         -.0230
   -.133                                                  -.0530
    .003     -.0730   -.0290   -.0030   -.0060   -.0120   -.0080
    .133                                                  -.0070
    .168                                          .0020
    .198                                -.0220
    .225                       -.0340
    .230                                                  -.0080
    .241              -.0390
    .251     -.0570
    .266                                                   .0000
    .291                                         -.0260
    .336                                          .0000
    .344                                -.0070
    .389                       -.0140
    .397                                 .0000
    .418              -.0290
    .434     -.0150
    .449                        .0000
    .482               .0000
    .502      .0000
```

DATE 05 NOV 75 TABULATED DATA FOR CAL T14-053 (IA36)

CAL T14-053 IA36 + T1 + S1 LOWER LH MPS NOZ. (NUFB07)

MACH (1) = 1.198 ALPHA (2) = -4.075

SECTION (1)LOWER LH MPS NOZ. DEPENDENT VARIABLE DELCP

X/DE	.0580	.2320	.4060	.5800	.7540	.9280
Y/DE						
-.502	.0000					
-.482		.0000				
-.449			.0000			
-.434	.0050					
-.418		.0340				
-.397				.0000		
-.389			-.0160			
-.344				.0030		
-.336					.0000	
-.291					.0430	
-.266						.0000
-.251	-.0500					
-.241		-.0160				
-.230						-.0080
-.225			.0290			
-.198				-.0020		
-.168					-.0170	
-.133						-.0100
.000	-.0790	-.0280	.0010	.0110	-.0070	-.0110
.133						-.0270
.168					.0000	
.198				-.0080		
.225			-.0230			
.230						-.0100
.241		-.0220				
.251	-.0610					
.266						.0000
.291					-.0400	
.336					.0000	
.344				-.0270		
.389			-.0010			
.397				.0000		
.418		-.0330				
.434	-.0320					
.449			.0000			
.482		.0000				
.502	.0000					

CAL T14-053 IA36 02 + T1 + S1 LOWER LH MPS NOZ. (NUFB07)

MACH (1) = 1.197 ALPHA (3) = -.023

SECTION (1)LOWER LH MPS NOZ. DEPENDENT VARIABLE DELCP

X/DE	.0580	.2320	.4060	.5800	.7540	.9280
Y/DE						
-.502	.0000					
-.482		.0000				
-.449			.0000			
-.434	.0170					
-.418		.0350				
-.397				.0000		
-.389			-.0070			
-.344				.0040		
-.336					.0000	
-.291					.0410	
-.266						.0000
-.251	-.0240					
-.241		-.0020				
-.230						.0050
-.225			.0200			
-.198				.0010		
-.168					.0030	
-.133						-.0080
.000	-.1110	-.0030	.0150	.0110	.0000	-.0130
.133						-.0240
.168					-.0050	
.198				-.0020		
.225			-.0070			
.230						-.0160
.241		-.0310				
.251	-.0780					
.266						.0000
.291					-.0410	
.336					.0000	
.344				-.0310		
.389			-.0100			
.397				.0000		
.418		-.0310				
.434	-.0350					
.449			.0000			
.482		.0000				
.502	.0000					

```
                              CAL T14-053 IA36 02 + T1 + S1 LOWER LH MPS NOZ.          (NUFB07)

MACH  ( 1) =    1.196    ALPHA ( 4) =    4.017

 SECTION ( 1)LOWER LH MPS NOZ.            DEPENDENT VARIABLE DELCP

X/DE          .0580    .2320    .4060    .5800    .7540    .9280

  Y/DE
   -.502      .0000
   -.482               .0000
   -.449                        .0000
   -.434      .0480
   -.418               .0590
   -.397                                 .0000
   -.389                        .0000
   -.344                                 .0280
   -.336                                          .0000
   -.291                                          .0000
   -.266                                                   .0000
   -.251     -.0210
   -.241               .0000
   -.230                                                  -.0330
   -.225                        .0450
   -.198                                -.0080
   -.168                                         -.0240
   -.133                                                   .0000
    .000      .0000   -.0110   -.0050   -.0100   -.0060   -.0150
    .133                                                   .0000
    .168                                         -.0180
    .198                                -.0070
    .225                       -.0520
    .230                                                   .0030
    .241               .0000
    .251     -.0800
    .266                                                   .0000
    .291                                          .0000
    .336                                          .0000
    .344                                -.0460
    .389                        .0000
    .397                                 .0000
    .418               .0000
    .434     -.0410
    .449                        .0000
    .482               .0000
    .502      .0000
```

```
DATE 05 NOV 75          TABULATED DATA FOR CAL T14-053 (IA36)                                      PAGE  256

                               CAL T14-053 IA36 O2 + T1 + S1 LOWER LH MPS NOZ.              (NUFB07)

MACH  ( 1) =    1.200    ALPHA ( 5) =    6.028

 SECTION ( 1)LOWER L H MPS NOZ.             DEPENDENT VARIABLE DELCP

X/DE         .0580   .2320   .4060   .5800   .7540   .9280

  Y/DE
   -.502     .0000
   -.482             .0000
   -.449                     .0000
   -.434     .0100
   -.418             .0660
   -.397                             .0000
   -.389                     .0000
   -.344                             .0010
   -.336                                     .0000
   -.291                                     .0000
   -.266                                             .0000
   -.251    -.0100
   -.241             .0000
   -.230                                            -.0180
   -.225                     .0290
   -.198                             .0060
   -.168                                    -.0340
   -.133                                             .0000
    .000     .0000  -.0160   .0060  -.0100  -.0130  -.0200
    .133                                             .0000
    .168                                     .0010
    .198                             .0030
    .225                    -.0480
    .230                                             .0060
    .241             .0000
    .251    -.0890
    .266                                             .0000
    .291                                     .0000
    .336                                     .0000
    .344                            -.0300
    .389                     .0000
    .397                             .0000
    .418            -.0090
    .434     .0040
    .449                     .0000
    .482             .0000
    .502     .0000
```

```
                          CAL T14-053 IA36 02 + T1 + S1 LOWER LH MPS NOZ.                 (NUFB08)    ( 18 DEC 73  )

              REFERENCE DATA                                                                   PARAMETRIC DATA

SREF  =     49.4000 SQ.FT.    XMRP  =   158.0000 INCHES                       ALPHA  =      .000   POWER  =     1.000
LREF  =     90.7000 INCHES    YMRP  =      .0000 INCHES                       OPR    =    28.310   SRMPR  =     2.020
BREF  =     90.7000 INCHES    ZMRP  =      .0000 INCHES                       GP1    =    11.000   GY1    =    -9.000
SCALE =       .0190 SCALE                                                     GP2    =      .000   GY2    =    -9.000
                                                                              GP3    =      .000   GY3    =    -9.000

MACH  ( 1) =     1.194    BETA  ( 1) =    -6.074

 SECTION ( 1)LOWER LH MPS NOZ.               DEPENDENT VARIABLE DELCP

X/DE      .0580  .2320  .4060  .5800  .7540  .9280

 Y/DE
  -.502   .0000
  -.482          .0000
  -.449                 .0000
  -.434  -.0610
  -.418          .0120
  -.397                        .0000
  -.389                -.0140
  -.344                       -.0100
  -.336                               .0000
  -.291                               .0350
  -.266                                      .0000
  -.251  -.0850
  -.241         -.0630
  -.230                                      .0230
  -.225                -.0140
  -.198                       -.0070
  -.168                              -.0090
  -.133                                      .0170
   .000  -.1770 -.0910 -.0130 -.0040  .0060  .0040
   .133                                     -.0110
   .168                               .0020
   .198                        .0070
   .225                 .0090
   .230                                     -.0090
   .241         -.0270
   .251  -.1180
   .266                                      .0000
   .291                              -.0170
   .336                               .0000
   .344                        .0070
   .389                 .0310
   .397                        .0000
   .418          .0430
   .434   .0140
   .449                 .0000
   .482          .0000
   .502   .0000
```

```
                            CAL T14-053 IA36 02 + T1 + S1 LOWER LH MPS NOZ.          (NUFB08)

MACH  ( 1) =    1.194    BETA  ( 2) =    -3.044

 SECTION ( 1)LOWER LH MPS NOZ.              DEPENDENT VARIABLE DELCP

X/DE         .0580   .2320   .4060   .5800   .7540   .9280

  Y/DE
  -.502      .0000
  -.482              .0000
  -.449                      .0000
  -.434      .0070
  -.418              .0310
  -.397                              .0000
  -.389                      .0000
  -.344                              .0100
  -.336                                      .0000
  -.291                                      .0000
  -.266                                              .0000
  -.251     -.0620
  -.241              .0000
  -.230                                              .0120
  -.225                      .0090
  -.198                             -.0110
  -.168                                     -.0130
  -.133                                              .0000
   .000      .0000  -.0750  -.0110  -.0090   .0030  -.0020
   .133                                              .0000
   .168                                      .0010
   .198                              .0020
   .225                     -.0180
   .230                                              .0030
   .241              .0000
   .251     -.1250
   .266                                              .0000
   .291                                      .0000
   .336                                      .0000
   .344                             -.0310
   .389                      .0000
   .397                              .0000
   .418             -.0030
   .434     -.0120
   .449                      .0000
   .482              .0000
   .502      .0000
```

CAL T14-053 IA36 O2 + T1 + S1 LOWER LH MPS NOZ. (NUFB08)

MACH (1) = 1.199 BETA (3) = .000

SECTION (1)LOWER LH MPS NOZ. DEPENDENT VARIABLE DELCP

X/DE	.0580	.2320	.4060	.5800	.7540	.9280
Y/DE						
-.502	.0000					
-.482		.0000				
-.449			.0000			
-.434	.0240					
-.418		.0540				
-.397				.0000		
-.389			.0030			
-.344				-.0060		
-.336					.0000	
-.291					.0090	
-.266						.0000
-.251	-.0090					
-.241		.0150				
-.230						.0150
-.225			.0210			
-.198				-.0040		
-.168					-.0180	
-.133						.0040
.000	-.0760	-.0140	.0070	.0050	.0010	.0030
.133						-.0070
.168					.0150	
.198				.0050		
.225			-.0160			
.230						-.0170
.241		-.0370				
.251	-.0930					
.266						.0000
.291					-.0180	
.336					.0000	
.344				-.0080		
.389			-.0170			
.397				.0000		
.418		-.0290				
.434	-.0420					
.449			.0000			
.482		.0000				
.502	.0000					

```
DATE 05 NOV 75            TABULATED DATA FOR CAL T14-053 (IA36)                                              PAGE  260

                                    CAL T14-053 IA36 O2 + T1 + S1 LOWER LH MPS NOZ.              (NUFB08)

MACH  ( 1) =    1.195   BETA  ( 4) =    3.049

 SECTION ( 1)LOWER LH MPS NOZ.                 DEPENDENT VARIABLE DELCP

X/DE         .0580     .2320     .4060     .5800     .7540     .9280

  Y/DE
   -.502     .0000
   -.482               .0000
   -.449                         .0000
   -.434     .0740
   -.418               .0180
   -.397                                   .0000
   -.389                        -.0040
   -.344                                   .0340
   -.336                                             .0000
   -.291                                             .0240
   -.266                                                       .0000
   -.251     .0340
   -.241               .0120
   -.230                                                       .0240
   -.225                        -.0070
   -.198                                  -.0020
   -.168                                             .0690
   -.133                                                       .0250
    .000    -.0260    -.0240    -.0010    -.0040    -.0090     .0720
    .133                                                      -.0250
    .168                                            -.0570
    .198                                  -.0050
    .225                         .0150
    .230                                                      -.0310
    .241              -.0320
    .251    -.0050
    .266                                                       .0000
    .291                                            -.0200
    .336                                             .0000
    .344                                  -.0840
    .389                         .0110
    .397                                   .0000
    .418               .0250
    .434    -.0430
    .449                         .0000
    .482               .0000
    .502     .0000
```

```
                                  CAL T14-053 IA36 02 + T1 + S1 LOWER LH MPS NOZ.            (NUFB08)

MACH  ( 1) =    1.197    BETA  ( 5) =     6.079

 SECTION ( 1)LOWER LH MPS NOZ.             DEPENDENT VARIABLE DELCP

X/DE         .0580   .2320   .4060   .5800   .7540   .9280

  Y/DE
   -.502     .0000
   -.482             .0000
   -.449                     .0000
   -.434     .0460
   -.418             .0370
   -.397                             .0000
   -.389                     .0200
   -.344                             .0100
   -.336                                     .0000
   -.291                                     .0280
   -.266                                             .0000
   -.251     .0430
   -.241             .0120
   -.230                                             .0120
   -.225                     .0060
   -.198                             .0200
   -.168                                     .0080
   -.133                                            -.0090
    .000    -.0230  -.0170   .0010   .0010  -.0110   .0000
    .133                                            -.0070
    .168                                    -.0190
    .198                            -.0180
    .225                    -.0050
    .230                                            -.0110
    .241            -.0330
    .251    -.1120
    .266                                             .0000
    .291                                    -.0330
    .336                                     .0000
    .344                            -.0270
    .389                    -.0120
    .397                             .0000
    .418            -.0060
    .434    -.0380
    .449                     .0000
    .482             .0000
    .502     .0000
```

```
                                 CAL T14-053 IA36 02 + T1 + S1 LOWER RH MPS NOZ.                (NUFC01)   ( 18 DEC 73  )

              REFERENCE DATA                                                                        PARAMETRIC DATA

SREF  =    49.4000 SQ.FT.   XMRP  =   158.0000 INCHES                                BETA   =      .000   POWER  =      .000
LREF  =    90.7000 INCHES   YMRP  =      .0000 INCHES                                GP1    =    11.000   GY1    =    -9.000
BREF  =    90.7000 INCHES   ZMRP  =      .0000 INCHES                                GP2    =      .000   GY2    =    -9.000
SCALE =      .0190 SCALE                                                             GP3    =      .000   GY3    =      .000

MACH  ( 1) =      .901    ALPHA ( 1) =    -8.088

 SECTION ( 1)LOWER RH MPS NOZ.                DEPENDENT VARIABLE DELCP

X/DE          .0580    .2320    .4060    .5800    .7540    .9280

  Y/DE
   -.502      .0000
   -.482               .0000
   -.449                        .0000
   -.434      .0150
   -.418               .0070
   -.397                                 .0000
   -.389                        .0090
   -.344                               -.0250
   -.336                                          .0000
   -.291                                         -.0150
   -.266                                                   .0000
   -.251      .0490
   -.241               .0010
   -.230                                                   .0090
   -.225                       -.0050
   -.198                               -.0270
   -.168                                         -.0180
   -.133                                                   .0130
    .000     -.0120    .0830    .0120  -.0250     .0200    .0270
    .230                                                   .0110
    .266                                                   .0000
    .291                                         -.0290
    .336                                          .0000
    .344                                 .0080
    .389                        .1530
    .397                                 .0000
    .418               .4680
    .434      .4440
    .449                        .0700
    .482               .0000
    .502      .0000
```

```
                              CAL T14-053 IA36 02 + T1 + S1 LOWER RH MPS NOZ.                (NUFC01)
 ACH   ( 1) =      .900    ALPHA ( 2) =    -4.049
 SECTION ( 1)LOWER RH MPS NOZ.                DEPENDENT VARIABLE DELCP
X/DE        .0580   .2320   .4060   .5800   .7540   .9280

  Y/DE
   -.502    .0000
   -.482            .0000
   -.449                    .0000
   -.434    .0120
   -.418            .0230
   -.397                            .0000
   -.389                    .0160
   -.344                           -.0170
   -.336                                     .0000
   -.291                                    -.0230
   -.266                                             .0000
   -.251    .0230
   -.241            .0070
   -.230                                             .0250
   -.225                   -.0070
   -.198                           -.0410
   -.168                                    -.0250
   -.133                                             .0160
    .000   -.0100   .0490  -.0090  -.0040    .0210   .0250
    .230                                             .0130
    .266                                             .0000
    .291                                    -.0110
    .336                                     .0000
    .344                            .0300
    .389                    .1660
    .397                            .0000
    .418            .4760
    .434    .4240
    .449                    .0000
    .482            .0000
    .502    .0000
MACH   ( 1) =      .900    ALPHA ( 3) =      .013
 SECTION ( 1)LOWER RH MPS NOZ.                DEPENDENT VARIABLE DELCP
X/DE        .0580   .2320   .4060   .5800   .7540   .9280

  Y/DE
   -.502    .0000
   -.482            .0000
   -.449                    .0000
   -.434    .0050
   -.418            .0150
   -.397                            .0000
```

```
                                  CAL T14-053 IA36 O2 + T1 + S1 LOWER RH MPS NOZ.           (NUFCC1)

MACH  ( 1) =     .900   ALPHA ( 3) =     .013

 SECTION ( 1)LOWER RH MPS NOZ.            DEPENDENT VARIABLE DELCP

X/DE        .0580  .2320  .4060  .5800  .7540  .9280

  Y/DE
  -.389                   .0180
  -.344                        -.0120
  -.336                                .0000
  -.291                               -.0090
  -.266                                       .0000
  -.251     .0210
  -.241            .0120
  -.230                                       .0150
  -.225                  -.0080
  -.198                        -.0580
  -.168                               -.0130
  -.133                                       .0120
   .000    -.0160  .0640  .0010 -.0060  .0200  .0300
   .230                                       .0090
   .266                                       .0000
   .291                               -.0220
   .336                                .0030
   .344                         .0490
   .389                   .1830
   .397                         .0000
   .418            .4520
   .434     .3470
   .449                   .0000
   .482            .0000
   .502     .0000

MACH  ( 1) =     .899   ALPHA ( 4) =    4.005

 SECTION ( 1)LOWER RH MPS NOZ.            DEPENDENT VARIABLE DELCP

X/DE        .0580  .2320  .4060  .5800  .7540  .9280

  Y/DE
  -.502     .0000
  -.482            .0000
  -.449                   .0000
  -.434     .0250
  -.418            .0250
  -.397                         .0000
  -.389                   .0180
  -.344                        -.0080
  -.336                                .0000
  -.291                               -.0190
  -.266                                       .0000
  -.251     .0290
```

CAL T14-053 IA36 02 + T1 + S1 LOWER RH MPS NOZ. (NUFC01)

MACH (1) = .899 ALPHA (4) = 4.005

SECTION (1)LOWER RH MPS NOZ. DEPENDENT VARIABLE DELCP

X/DE	.0580	.2320	.4060	.5800	.7540	.9280
Y/DE						
-.241		.0200				
-.230						.0240
-.225			-.0060			
-.198				-.0230		
-.160					-.0420	
-.133						.0130
.000	-.0070	.0580	-.0070	-.0040	.0220	.0370
.230						.0050
.266						.0000
.291					-.0120	
.336					.0000	
.344				.0490		
.389			.1780			
.397				.0000		
.418		.4380				
.434	.3360					
.449			.0000			
.482		.0000				
.502	.0000					

MACH (1) = .899 ALPHA (5) = 6.006

SECTION (1)LOWER RH MPS NOZ. DEPENDENT VARIABLE DELCP

X/DE	.0580	.2320	.4060	.5800	.7540	.9280
Y/DE						
-.502	.0000					
-.482		.0000				
-.449			.0000			
-.434	.0120					
-.418		.0240				
-.397				.0000		
-.389			.0150			
-.344				.0040		
-.336					.0000	
-.291					-.0050	
-.266						.0000
-[illegible]	.0080					
-.241		-.0060				
-.230						.0240
-.225			-.0160			
-.198				-.0220		
-.168					-.0090	
-.133						-.0080

```
                                  CAL T14-053 !A36 O2 + T1 + S1 LOWER RH MPS NOZ.                (NUFC01)

MACH  ( 1) =      .899    ALPHA ( 5) =     6.006

 SECTION ( 1)LOWER RH MPS NOZ.                DEPENDENT VARIABLE DELCP

X/DE         .0580    .2320    .4060    .5800    .7540    .9280

  Y/DE
    .000     .0080    .0790   -.0050   -.0110    .0270    .0400
    .230                                                  .0290
    .266                                                  .0000
    .291                                        -.0350
    .336                                         .0000
    .344                                .0350
    .399                       .1590
    .397                                .0000
    .418              .4470
    .434     .3600
    .449                       .0000
    .482              .0000
    .502     .0000
```

```
                                CAL T14-053 IA36 02 + T1 + S1 LOWER RH MPS NOZ.                  (NUFC02)    ( 18 DEC 73  )

              REFERENCE DATA                                                                     PARAMETRIC DATA

SREF  =     49.4000 SQ.FT.   XMRP  =   158.0000 INCHES                         ALPHA  =       .000   POWER  =       .000
LREF  =     90.7000 INCHES   YMRP  =      .0000 INCHES                         GP1    =     11.000   GY1    =    -3.000
BREF  =     90.7000 INCHES   ZMRP  =      .0000 INCHES                         GP2    =       .000   GY2    =    -9.000
SCALE =       .0190 SCALE                                                      GP3    =       .000   GY3    =       .000

MACH  ( 1) =      .901    BETA  ( 1) =   -6.079

 SECTION ( 1)LOWER RH MPS NOZ.                    DEPENDENT VARIABLE DELCP

X/DE          .0580   .2320   .4060   .5800   .7540   .9280

  Y/DE
   -.502     .0000
   -.482             .0000
   -.449                     .0000
   -.434     .0310
   -.418             .0100
   -.397                             .0000
   -.389                     .0190
   -.344                            -.0030
   -.335                                     .0000
   -.291                                    -.0120
   -.266                                             .0000
   -.251     .0160
   -.241             .0140
   -.230                                             .0240
   -.225                    -.0100
   -.198                            -.0240
   -.168                                    -.0260
   -.133                                             .0200
    .000    -.0100   .0580  -.0130  -.0100   .0300   .0400
    .230                                             .0250
    .266                                             .0000
    .291                                    -.0180
    .336                                     .0000
    .344                             .0310
    .389                     .1250
    .397                             .0000
    .418             .2820
    .434     .2990
    .449                     .0000
    .482             .0000
    .502     .0000
```

```
                              CAL T14-053 IA36 02 + T1 + S1 LOWER RH MPS NOZ.            (NUFC02)
MACH  ( 1) =    .900    BETA  ( 2) =   -3.049
 SECTION ( 1)LOWER RH MPS NOZ.            DEPENDENT VARIABLE DELCP
X/DE         .0580   .2320   .4060   .5800   .7540   .9280

  Y/DE
     -.502   .0000
     -.482           .0000
     -.449                   .0000
     -.434   .0040
     -.418           .0110
     -.397                           .0000
     -.389                   .0250
     -.344                          -.0200
     -.336                                   .0000
     -.291                                  -.0040
     -.266                                           .0000
     -.251   .0170
     -.241           .0010
     -.230                                           .0100
     -.225                  -.0090
     -.198                          -.0240
     -.168                                  -.0160
     -.133                                           .0140
      .000   .0150   .0530  -.0130  -.0030   .0120   .0360
      .230                                           .0090
      .266                                           .0000
      .291                                  -.0250
      .336                                   .0000
      .344                           .0290
      .389                   .1480
      .397                           .0000
      .418           .3300
      .434   .3170
      .449                   .0000
      .402           .0000
      .502   .0000
MACH  ( 1) =    .901    BETA  ( 3) =    .000
 SECTION ( 1)LOWER RH MPS NOZ.            DEPENDENT VARIABLE DELCP
X/DE         .0580   .2320   .4060   .5800   .7540   .9280

  Y/DE
     -.502   .0000
     -.482           .0000
     -.449                   .0000
     -.434   .0180
     -.418           .0180
     -.397                           .0000
```

```
                                     CAL T14-053 IA35 C2 + T1 + S1 LOWER RH MPS NOZ.              (NUFC02)

MACH  ( 1) =     .901    BETA  ( 3) =     .000

 SECTION ( 1)LOWER RH MPS NOZ.              DEPENDENT VARIABLE DELCP

X/DE          .0580    .2320    .4060    .5800    .7540    .9280

  Y/DE
   -.389                         .0140
   -.344                                 -.0220
   -.335                                           .0000
   -.291                                          -.0150
   -.266                                                    .0000
   -.251      .0240
   -.241               .0050
   -.230                                                    .0270
   -.225                        -.0040
   -.198                                 -.0300
   -.168                                          -.0290
   -.133                                                    .0090
    .000     -.0210    .0500    -.0230   -.0020    .0120    .0300
    .230                                                    .0020
    .266                                                    .0000
    .291                                          -.0060
    .336                                           .0000
    .344                                  .0330
    .389                         .1900
    .397                                  .0000
    .418               .4450
    .434      .3500
    .449                         .0000
    .482               .0000
    .502      .0000
MACH  ( 1) =     .900    BETA  ( 4) =    3.051

 SECTION ( 1)LOWER RH MPS NOZ.              DEPENDENT VARIABLE DELCP

X/DE          .0580    .2320    .4060    .5800    .7540    .9280

  Y/DE
   -.502      .0000
   -.482               .0000
   -.449                         .0000
   -.434      .0060
   -.418               .0150
   -.397                                  .0000
   -.389                         .0130
   -.344                                 -.0140
   -.336                                           .0000
   -.291                                          -.0020
   -.266                                                    .0000
   -.251     -.0030
```

```
DATE 05 NOV 75             TABULATED DATA FOR CAL T14-053 (IA36)                                                        PAGE  270

                                          CAL T14-053 IA36 02 + T1 + S1 LOWER RH MPS NOZ.                (NUFC02)

MACH  ( 1) =      .900    BETA  ( 4) =     3.051

 SECTION ( 1)LOWER RH MPS NOZ.               DEPENDENT VARIABLE DELCP

X/DE          .0580   .2320   .4060   .5800   .7540   .9280

  Y/DE
   -.241              -.0020
   -.230                                              .0110
   -.225                      -.0170
   -.198                              -.0590
   -.168                                      -.0270
   -.133                                              -.0030
    .000     -.0260    .0710   .0100  -.0020   .0000   .0210
    .230                                               .0030
    .266                                               .0000
    .291                                      -.0210
    .336                                       .0000
    .344                               .0290
    .369                       .2570
    .397                               .0000
    .418               .5440
    .434      .3830
    .449                       .0000
    .482               .0000
    .502      .0000
MACH  ( 1) =      .901    BETA  ( 5) =     6.089

 SECTION ( 1)LOWER RH MPS NOZ.               DEPENDENT VARIABLE DELCP

X/DE          .0580   .2320   .4060   .5800   .7540   .9280

  Y/DE
   -.502      .0000
   -.482               .0000
   -.449                       .0000
   -.434      .0120
   -.418               .0260
   -.397                               .0000
   -.389                       .0180
   -.344                              -.0130
   -.336                                       .0000
   -.291                                      -.0120
   -.266                                               .0000
   -.251     -.0310
   -.241              -.0130
   -.230                                               .0200
   -.225                       .0030
   -.198                              -.0480
   -.168                                      -.0230
   -.133                                              -.0090
```

```
DATE 05 NOV 75             TABULATED DATA FOR CAL T14-053 (IA36)

                                   CAL T14-053 IA36 O2 + T1 + S1 LOWER RH MPS NOZ.              (NUFC02)

MACH  ( 1) =     .901   BETA  ( 5) =    6.089

 SECTION ( 1)LOWER RH MPS NOZ.            DEPENDENT VARIABLE DELCP

X/DE         .0580   .2320   .4060   .5800   .7540   .9280

  Y/DE
   .000   -.0130   .0980   .0330   .0050   .0130   .0100
   .230                                            -.0090
   .265                                             .0000
   .291                                    .0010
   .335                                    .0000
   .344                            .0290
   .383                    .3420
   .337                            .0000
   .418            .5980
   .434    .3870
   .449                    .0000
   .462            .0000
   .502    .0000
```

```
                                   CAL T14-053 IA36 02 + T1 + S1 LOWER RH MPS NOZ.               (NUFC03)   ( 18 DEC 73  )

             REFERENCE DATA                                                                          PARAMETRIC DATA

SREF  =    49.4000 SQ.FT.   XMRP  =   158.0000 INCHES                        BETA   =      .000   POWER  =      1.000
LREF  =    90.7000 INCHES   YMRP  =      .0000 INCHES                        OPR    =    36.200   SRMPR  =      2.330
BREF  =    90.7000 INCHES   ZMRP  =      .0000 INCHES                        GP1    =    11.000   GY1    =     -9.000
SCALE =      .0190 SCALE                                                     GP2    =      .000   GY2    =     -9.000
                                                                             GP3    =      .000   GY3    =     -9.000

MACH  ( 1) =      .897    ALPHA ( 1) =    -8.088

 SECTION ( 1)LOWER RH MPS NOZ.             DEPENDENT VARIABLE DELCP

X/DE        .0580   .2320   .4060   .5800   .7540   .9280

  Y/DE
   -.502    .0000
   -.482            .0000
   -.449                    .0000
   -.434    .0140
   -.418            .0120
   -.397                            .0000
   -.389                    .0190
   -.344                           -.0190
   -.336                                    .0000
   -.291                                   -.0230
   -.266                                            .0000
   -.251   -.0160
   -.241            .0250
   -.230                                            .0240
   -.225                   -.0510
   -.198                           -.0110
   -.168                                   -.0250
   -.133                                            .0290
    .000   -.0650   .0440   .0020   .0030  -.0080   .0700
    .230                                           -.0170
    .266                                            .0000
    .291                                   -.0770
    .336                                    .0000
    .344                            .0450
    .389                    .2050
    .397                            .0000
    .418            .5680
    .434    .6080
    .449                    .0000
    .482            .0000
    .502    .0000
```

CAL T14-053 IA36 02 + T1 + S1 LOWER RH MPS NOZ. (NUFC03)

MACH (1) = .899 ALPHA (2) = -4.038

SECTION (1)LOWER RH MPS NOZ. DEPENDENT VARIABLE DELCP

X/DE	.0580	.2320	.4060	.5800	.7540	9280
Y/DE						
-.502	.0000					
-.482		.0000				
-.449			.0000			
-.434	.0170					
-.418		.0200				
-.397				.0000		
-.389			.0120			
-.344				-.0190		
-.336					.0000	
-.291					-.0190	
-.266						.0000
-.251	-.0180					
-.241		.0260				
-.230						.0190
-.225			.0250			
-.198				-.0140		
-.168					-.0270	
-.133						.0240
.000	-.0600	-.0050	-.0070	-.0120	-.0190	.0130
.230						-.0190
.266						.0000
.291					-.0010	
.336					.0000	
.344				.0390		
.389			.2020			
.397				.0000		
.418		.5860				
.434	.5710					
.449			.0000			
.482		.0000				
.502	.0000					

MACH (1) = .901 ALPHA (3) = .001

SECTION (1)LOWER RH MPS NOZ. DEPENDENT VARIABLE DELCP

X/DE	.0580	.2320	.4060	.5800	.7540	.9280
Y/DE						
-.502	.0000					
-.482		.0000				
-.449			.0000			
-.434	.0110					
-.418		.0070				
-.397				.0000		

```
                                   CAL T14-053 IA36 02 + T1 + S1 LOWER RH MPS NOZ.              (NUFC03)

MACH  ( 1) =     .902   ALPHA ( 3) =     .001

 SECTION ( 1)LOWER RH MPS NOZ.              DEPENDENT VARIABLE DELCP

X/DE         .0580   .2320   .4060   .5800   .7540   .9280

  Y/DE
   -.389                     .0090
   -.344                            -.0170
   -.336                                     .0000
   -.291                                    -.0250
   -.266                                             .0000
   -.251    -.0040
   -.241             .0250
   -.230                                             .0100
   -.225                     .0350
   -.198                            -.0060
   -.168                                    -.0190
   -.133                                             .0300
    .000    -.0450  -.0080   .0070  -.0090  -.0150   .0180
    .230                                            -.0130
    .266                                             .0000
    .291                                     .0110
    .336                                     .0000
    .344                             .0580
    .389                     .2480
    .397                             .0000
    .418             .5410
    .434     4650
    .449                     .0000
    .482             .0000
    .502     .0000

MACH  ( 1) =     .902   ALPHA ( 4) =    4.026

 SECTION ( 1)LOWER RH MPS NOZ.              DEPENDENT VARIABLE DELCP

X/DE         .0580   .2320   .4060   .5800   .7540   .9280

  Y/DE
   -.502     .0000
   -.482             .0000
   -.449                     .0000
   -.434     .0320
   -.418             .0210
   -.397                             .0000
   -.389                     .0170
   -.344                            -.0080
   -.336                                     .0000
   -.291                                    -.0290
   -.266                                             .0000
   -.251    -.0050
```

```
                              CAL T14-053 IA36 02 + T1 + S1 LOWER RH MPS NOZ.              (NUFC03)

MACH  ( 1) =     .902    ALPHA ( 4) =     4.026

 SECTION ( 1)LOWER RH MPS NOZ.              DEPENDENT VARIABLE DELCP

X/DE         .0590   .2320   .4060   .5800   .7540   .9280

  Y/DE
   -.241             .0330
   -.230                                             .0290
   -.225                     .0380
   -.199                            -.0170
   -.168                                    -.0280
   -.133                                             .0240
    .000   -.0340  -.0010   .0050  -.0030  -.0180   .0140
    .230                                            -.0110
    .266                                             .0000
    .291                                     .0150
    .336                                     .0000
    .344                             .0650
    .389                     .2270
    .397                             .0000
    .418             .5290
    .434    .4640
    .449                     .0000
    .482             .0000
    .502    .0000

MACH  ( 1) =     .898    ALPHA ( 5) =     6.021

 SECTION ( 1)LOWER RH MPS NOZ.              DEPENDENT VARIABLE DELCP

X/DE         .0580   .2320   .4060   .5800   .7540   .9280

  Y/DE
   -.502    .0000
   -.482             .0000
   -.449                     .0000
   -.434   -.0140
   -.418            -.0180
   -.397                             .0000
   -.389                     .0100
   -.344                            -.0110
   -.336                                     .0000
   -.291                                    -.0210
   -.266                                             .0000
   -.251   -.0040
   -.241             .0260
   -.230                                            -.0060
   -.225                    -.0350
   -.198                             .0100
   -.168                                    -.0060
   -.133                                             .0240
```

```
DATE 05 NOV 75              TABULATED DATA FOR CAL T14-053 (IA36)                                                       PAGE  276

                                          CAL T14-053 IA36 O2 + T1 + S1 LOWER RH MPS NOZ.                (NUFC03)

MACH  ( 1) =      .898    ALPHA ( 5) =     6.021

 SECTION ( 1)LOWER RH MPS NOZ.                       DEPENDENT VARIABLE DELCP

X/DE          .0580   .2320   .4060   .5800   .7540   .9280

  Y/DE
    .000   -.0250   .0350   .0250   .0040  -.0120   .0470
    .230                                           -.0080
    .266                                            .0000
    .291                                   -.0510
    .336                                    .0000
    .344                           .0600
    .399                   .2590
    .397                           .0000
    .416           .5190
    .434    .4900
    .449                   .0000
    .482           .0000
    .502    .0000
```

```
                                       CAL T14-053 IA36 02 + T1 + S1 LOWER RH MPS NOZ.                (NUFC04)   ( 18 DEC 73  )

              REFERENCE DATA                                                                     PARAMETRIC DATA

SREF  =    49.4000 SQ.FT.   XMRP  =   158.0000 INCHES                                        ALPHA  =      .000   POWER  =     1.000
LREF  =    90.7000 INCHES   YMRP  =      .0000 INCHES                                        OPR    =    36.200   SRMPR  =     2.330
BREF  =    90.7000 INCHES   ZMRP  =      .0000 INCHES                                        GP1    =    11.000   GY1    =    -9.000
SCALE =      .0190 SCALE                                                                     GP2    =      .000   GY2    =    -9.000
                                                                                             GP3    =      .000   G.3    =    -9.000

MACH  ( 1) =     .899    BETA  ( 1) =   -6.078

 SECTION ( 1)LOWER RH MPS NOZ.            DEPENDENT VARIABLE DELCP

X/DE        .0580   .2320   .4060   .5800   .7540   .9280

  Y/DE
   -.502    .0000
   -.482            .0000
   -.449                    .0000
   -.434    .0410
   -.418            .0180
   -.397                            .0000
   -.389                    .0260
   -.344                           -.0090
   -.336                                    .0000
   -.291                                   -.0260
   -.266                                            .0000
   -.251    .0430
   -.241            .0390
   -.230                                            .0350
   -.225                    .0120
   -.198                           -.0090
   -.168                                   -.0190
   -.133                                            .0450
    .000    .0150   .0450   .0300   .0080   .0190   .0450
    .230                                           -.0060
    .266                                            .0000
    .291                                   -.0150
    .336                                    .0000
    .344                            .0820
    .389                    .1930
    .397                            .0000
    .418            .4290
    .434    .5130
    .449                    .0000
    .492            .0000
    .502    .0000
```

```
DATE 05 NOV 75            TABULATED DATA FOR CAL T14-053 (IA36)                                         PAGE  278

                                        CAL T14-053 IA36 02 + T1 + S1 LOWER RH MPS NOZ.            (NUFC04)

MACH  ( 1) =     .900   BETA  ( 2) =   -3.049

 SECTION ( 1)LOWER RH MPS NOZ.               DEPENDENT VARIABLE DELCP

X/DE       .0580    .2320    .4060    .5800    .7540    .9280

  Y/DE
   -.502    .0000
   -.482             .0000
   -.449                      .0000
   -.434    .0260
   -.418             .0220
   -.397                               .0000
   -.369                      .0180
   -.344                              -.0030
   -.336                                        .0000
   -.291                                       -.0220
   -.266                                                 .0000
   -.251    .0050
   -.241             .0190
   -.230                                                 .0240
   -.225                      .0070
   -.198                              -.0130
   -.168                                       -.0270
   -.133                                                 .0330
    .000    .0110    .0390    .0100    .0150    .0040    .0380
    .230                                                -.0200
    .266                                                 .0000
    .291                                       -.0210
    .336                                        .0000
    .344                               .0600
    .369                      .2160
    .397                               .0000
    .418             .4300
    .434    .4530
    .449                      .0000
    .482             .0000
    .502    .0000

MACH  ( 1) =     .899   BETA  ( 3) =     .000

 SECTION ( 1)LOWER RH MPS NOZ                DEPENDENT VARIABLE DELCP

X/DE       .0580    .2320    .4060    .5800    .7540    .9280

  Y/DE
   -.502    .0000
   -.482             .0000
   -.449                      .0000
   -.434    .0060
   -.418             .0140
   -.397                               .0000
```

```
DATE 05 NOV 75            TABULATED DATA FOR CAL T14-053 (IA36)                                          PAGE  279
                                   CAL T14-053 IA36 02 + T1 + S1 LOWER RH MPS NOZ.              (NUFC04)

MACH  ( 1) =     .899   BETA  ( 3) =     .000

 SECTION ( 1)LOWER RH MPS NOZ.             DEPENDENT VARIABLE DELCP

X/DE          .0580   .2320   .4060   .5800   .7540   .9280

  Y/DE
  -.389                       .0080
  -.344                              -.0150
  -.336                                       .0000
  -.291                                      -.0280
  -.266                                               [illegible]
  -.251      -.0130
  -.241               .0300
  -.230                                               .0160
  -.225                       .0100
  -.198                              -.0150
  -.168                                      -.0250
  -.133                                               .0290
   .000      -.0350  -.0060   .0130  -.0130  -.0070   .0280
   .230                                              -.0090
   .266                                               .0000
   .291                                      -.0210
   .336                                       .0000
   .344                               .0600
   .389                       .2590
   .397                               .0000
   .418               .5190
   .434       .4530
   .449                       .0000
   .482               .0000
   .502       .0000
MACH  ( 1) =     .898   BETA  ( 4) =    3.051

 SECTION ( 1)LOWER RH MPS NOZ.             DEPENDENT VARIABLE DELCP

X/DE          .0580   .2320   .4060   .5800   .7540   .9280

  Y/DE
  -.502       .0000
  -.482               .0000
  -.449                       .0000
  -.434       .0350
  -.418              -.0160
  -.397                               .0000
  -.389                       .0010
  -.344                              -.0010
  -.336                                       .0000
  -.291                                      -.0180
  -.266                                               .0000
  -.251      -.0750
```

```
                         CAL T14-053 IA36 O2 + T1 + S1 LOWER RH MPS NOZ.              (NUFC04)
MACH  ( 1) =    .898   BETA  ( 4) =   3.051
 SECTION ( 1)LOWER RH MPS NOZ.                DEPENDENT VARIABLE DELCP
X/DE        .0580   .2320   .4060   .5800   .7540   .9280

  Y/DE
  -.241             .0090
  -.230                                              .0370
  -.225                     .0160
  -.198                            -.0210
  -.168                                    -.0310
  -.133                                              .0180
   .000    -.0900  -.0040  -.0060   .0030  -.0010    .0120
   .230                                             -.0250
   .266                                              .0000
   .291                                    -.0030
   .336                                     .0000
   .344                             .0460
   .389                     .3270
   .397                             .0000
   .416             .6010
   .434     .4750
   .449                     .6000
   .482             .0000
   .502     .0600
MACH  ( 1) =    .899   BETA  ( 5) =   6.088
 SECTION ( 1)LOWER RH MPS NOZ.                DEPENDENT VARIABLE DELCP
X/DE        .0580   .2320   .4060   .5800   .7540   .3280

  Y/DE
  -.502     .0000
  -.482             .0000
  -.449                     .0030
  -.434     .0360
  -.418            -.0540
  -.397                             .0000
  -.389                    -.0030
  -.344                             .0010
  -.336                                     .0000
  -.291                                    -.0050
  -.266                                              .0000
  -.251    -.1180
  -.241             .0070
  -.230                                              .0160
  -.225                     .0220
  -.198                            -.0170
  -.168                                    -.0250
  -.133                                              .0110
```

```
                                    CAL T14-053 IA36 O2 + T1 + S1 LOWER RH MPS NOZ.                 (NUFC04)

MACH  ( 1) =      .899    BETA  ( 5) =    6.098

 SECTION ( 1)LOWER RH MPS NOZ.                DEPENDENT VARIABLE DELCP

X/DE          .0580   .2320   .4060   .5800   .7540   .9280

  Y/DE
    .000    -.1120  -.0130  -.0120  -.0060  -.0070   .0070
    .230                                            -.0320
    .266                                             .0000
    .291                                     .0080
    .336                                     .0000
    .344                             .0540
    .389                     .4340
    .397                             .0000
    .418             .6290
    .434     .4650
    .449                     .0000
    .482             .0000
    .502     .0000
```

REPRODUCIBILITY OF THE
ORIGINAL PAGE IS POOR

```
                              CAL T14-053 IA36 O2 + T1 + S1 LOWER RH MPS NOZ.              (NUFC05)    ( 18 DEC 73  )

              REFERENCE DATA                                                                      PARAMETRIC DATA

SREF  =     49.4000 SQ.FT.    XMRP  =   158.0000 INCHES                         BETA    =       .000   POWER   =       .000
LREF  =     90.7000 INCHES    YMRP  =      .0000 INCHES                         GP1     =     11.000   GY1     =     -9.000
BREF  =     90.7000 INCHES    ZMRP  =      .0000 INCHES                         GP2     =       .000   GY2     =     -9.000
SCALE =       .0190 SCALE                                                       GP3     =       .000   GY3     =       .000

MACH  ( 1) =     1.203    ALPHA ( 1) =    -8.101

 SECTION ( 1)LOWER RH MPS NOZ.              DEPENDENT VARIABLE DELCP

X/DE         .0580   .2320   .4060   .5800   .7540   .9280

  Y/DE
  -.502      .0000
  -.482              .0000
  -.449                      .0000
  -.434     -.0100
  -.418             -.0190
  -.397                              .0000
  -.389                      .0420
  -.344                             -.0150
  -.335                                      .0000
  -.291                                     -.0200
  -.266                                              .0000
  -.251      .0360
  -.241             -.0030
  -.230                                             -.0080
  -.225                     -.0290
  -.198                             -.0100
  -.168                                     -.0060
  -.133                                              .0000
   .000      .1110   .0890   .0570   .0740   .0140   .0170
   .230                                             -.0020
   .266                                              .0000
   .291                                     -.0250
   .336                                      .0000
   .344                              .0460
   .389                      .2720
   .397                              .0000
   .418              .7030
   .434      .6840
   .449                      .0000
   .482              .0000
   .502      .0000
```

```
                        CAL T14-053 IA36 U2 + T1 + S1 LOWER RH MPS NOZ.        (NUFC05)

MACH  ( 1) =    1.202   ALPHA ( 2) =   -4.038

 SECTION ( 1)LOWER RH MPS NOZ.           DEPENDENT VARIABLE DELCP

X/DE        .0580   .2320   .4060   .5800   .7540   .9280

  Y/DE
   -.502    .0000
   -.482            .0000
   -.449                    .0000
   -.434   -.0120
   -.418           -.0190
   -.397                            .0000
   -.389                    .0380
   -.344                           -.0190
   -.335                                    .0000
   -.291                                   -.0140
   -.266                                            .0000
   -.251    .0370
   -.241           -.0060
   -.230                                           -.0010
   -.225                   -.0310
   -.198                           -.0130
   -.168                                   -.0080
   -.133                                            .0000
    .000    .0220   .0970   .0310   .0600   .0240   .0200
    .230                                            .0060
    .266                                            .0000
    .291                                   -.0350
    .336                                    .0000
    .344                            .0250
    .389                    .2020
    .397                            .0000
    .418            .5610
    .434    .6270
    .449                    .0000
    .482            .0000
    .502    .0000
MACH  ( 1) =    1.203   ALPHA ( 3) =    -.011

 SECTION ( 1)LOWER RH MPS NOZ.           DEPENDENT VARIABLE DELCP

X/DE        .0580   .2320   .4060   .5800   .7540   .9280

  Y/DE
   -.502    .0000
   -.482            .0000
   -.449                    .0000
   -.434   -.0120
   -.418           -.0080
   -.397                            .0000
```

```
                              CAL T14-053 IA36 02 + T1 + S1 LOWER RH MPS NOZ.          (NUFC05)

MACH  ( 1) =    1.203    ALPHA ( 3) =    -.011

 SECTION ( 1)LOWER RH MPS NOZ.              DEPENDENT VARIABLE DELCP

X/DE         .0580   .2320   .4060   .5800   .7540   .9280

  Y/DE
   -.389                     .0360
   -.344                             -.0100
   -.336                                      .0000
   -.291                                     -.0070
   -.266                                              .0000
   -.251     .0330
   -.241            -.0070
   -.230                                              .0000
   -.225                    -.0280
   -.198                            -.0130
   -.168                                     -.0010
   -.133                                             -.0010
    .000     .0030   .0720  -.0010   .0480   .0210   .0250
    .230                                              .0190
    .266                                              .0000
    .291                                     -.0440
    .336                                      .0000
    .344                            -.0020
    .389                     .1430
    .397                             .0000
    .418             .4190
    .434     .4930
    .449                     .0000
    .482             .0000
    .502     .0000

MACH  ( 1) =    1.203    ALPHA ( 4) =    4.003

 SECTION ( 1)LOWER RH MPS NOZ.              DEPENDENT VARIABLE DELCP

X/DE         .0580   .2320   .4060   .5800   .7540   .9280

  Y/DE
   -.502     .0000
   -.482             .0000
   -.449                     .0000
   -.434    -.0180
   -.418            -.0110
   -.397                             .0000
   -.389                     .0360
   -.344                            -.0220
   -.336                                      .0000
   -.291                                     -.0140
   -.266                                              .0000
   -.251     .0290
```

```
                                     CAL T14-053 IA36 02 + T1 + S1 LOWER RH MPS NOZ.              (NUFC05)

MACH  ( 1) =     1.203    ALPHA ( 4) =     4.003

 SECTION ( 1)LOWER RH MPS NOZ.                 DEPENDENT VARIABLE DELCP

X/DE          .0580   .2320   .4060   .5800   .7540   .9280

  Y/DE
   -.241              .0050
   -.230                                             -.0080
   -.225                     -.0280
   -.198                             -.0050
   -.168                                      .0110
   -.133                                              .0100
    .000      .0020   .0600   .0050   .0340   .0160   .0320
    .230                                              .0150
    .266                                              .0000
    .291                                     -.0350
    .336                                      .0000
    .344                              .0090
    .389                      .0940
    .397                              .0000
    .418              .2980
    .434      .4070
    .449                      .0000
    .482              .0000
    .502      .0000

MACH  ( 1) =     1.202    ALPHA ( 5) =     6.018

 SECTION ( 1)LOWER RH MPS NOZ.                 DEPENDENT VARIABLE DELCP

X/DE          .0580   .2320   .4060   .5800   .7540   .9280

  Y/DE
   -.502      .0000
   -.482              .0000
   -.449                      .0000
   -.434     -.0170
   -.418             -.0150
   -.397                              .0000
   -.389                      .0320
   -.344                             -.0220
   -.336                                      .0000
   -.291                                     -.0220
   -.266                                              .0000
   -.251      .0360
   -.241              .0100
   -.230                                             -.0100
   -.225                     -.0400
   -.198                              .0010
   -.168                                     -.0030
   -.133                                              .0160
```

```
                          CAL T14-053 IA36 O2 + T1 + S1 LOWER RH MPS NOZ.              (NUFC05)

MACH  ( 1) =    1.202    ALPHA ( 5) =    6.018

 SECTION ( 1)LOWER RH MPS NOZ.              DEPENDENT VARIABLE DELCP

X/DE         .0580   .2320   .4060   .5800   .7540   .9280

  Y/DE
   .000    -.0030   .0260   .0190   .0330   .0200   .0350
   .230                                              .0080
   .266                                              .0000
   .291                                     -.0400
   .336                                      .0000
   .344                             .0150
   .389                     .0730
   .397                             .0000
   .418             .2120
   .434     .3180
   .449                     .0000
   .482             .0000
   .502     .0000
```

```
                                   CAL T14-053 IA36 O2 + T1 + S1 LOWER RH MPS NOZ.              (NUFC06)   ( 18 DEC 73  )

              REFERENCE DATA                                                                     PARAMETRIC DATA

SREF  =     49.4000 SQ.FT.   XMRP  =   158.0000 INCHES                        ALPHA  =      .000   POWER  =     .000
LREF  =     90.7000 INCHES   YMRP  =      .0000 INCHES                        GP1    =    11.000   GY1    =   -9.000
BREF  =     90.7000 INCHES   ZMRP  =      .0000 INCHES                        GP2    =      .000   GY2    =   -9.000
SCALE =       .0190 SCALE                                                     GP3    =      .000   GY3    =     .000

MACH  ( 1) =    1.202    BETA  ( 1) =   -6.079

 SECTION ( 1)LOWER RH MPS NOZ.                  DEPENDENT VARIABLE DELCP

X/DE         .0580   .2320   .4060   .5800   .7540   .9280

  Y/DE
   -.502     .0000
   -.482             .0000
   -.449                     .0000
   -.434     .0030
   -.418             .0010
   -.397                             .0000
   -.389                     .0270
   -.344                            -.0030
   -.336                                     .0000
   -.291                                    -.0050
   -.266                                             .0000
   -.251     .0100
   -.241             .0040
   -.230                                             .0040
   -.225                    -.0080
   -.198                             .0020
   -.168                                    -.0020
   -.133                                             .0050
    .000    -.0030   .0280  -.0110   .0410   .0130   .0280
    .230                                             .0140
    .266                                             .0000
    .291                                    -.0220
    .336                                     .0000
    .344                             .0020
    .389                     .0370
    .337                             .0000
    .418             .2400
    .434     .3510
    .449                     .0000
    .482             .0000
    .502     .0000
```

```
                                   CAL T14-053 IA36 02 + T1 + S1 LOWER RH MPS NOZ.            (NUFC06)
MACH  ( 1) =    1.202    BETA  ( 2) =    -3.051
 SECTION ( 1)LOWER RH MPS NOZ.               DEPENDENT VARIABLE DELCP
X/DE           .0580     .2320     .4060     .5800     .7540     .9290
  Y/DE
   -.502       .0000
   -.482                 .0000
   -.449                           .0000
   -.434      -.0020
   -.418                -.0030
   -.397                                     .0000
   -.389                           .0080
   -.344                                    -.0010
   -.336                                               .0000
   -.291                                               .0000
   -.266                                                         .0000
   -.251       .0040
   -.241                -.0010
   -.230                                                        -.0020
   -.225                          -.0120
   -.198                                    -.0030
   -.168                                               .0080
   -.133                                                         .0020
    .000      -.0030     .0560    -.0160    -.0050     .0090     .0310
    .230                                                         .0190
    .266                                                         .0000
    .291                                              -.0230
    .336                                               .0000
    .344                                    -.0060
    .389                           .0820
    .397                                     .0000
    .418                 .3210
    .434       .4060
    .449                           .0000
    .482                 .0000
    .502       .0000
MACH  ( 1) =    1.202    BETA  ( 3) =     .000
 SECTION ( 1)LOWER RH MPS NOZ.               DEPENDENT VARIABLE DELCP
X/DE           .0580     .2320     .4060     .5800     .7540     .9280
  Y/DE
   -.502       .0000
   -.482                 .0000
   -.449                           .0000
   -.434       .0000
   -.418                 .0000
   -.397                                     .0000
```

```
                         CAL T14-053 IA36 02 + T1 + S1 LOWER RH MPS NOZ.          (NUFC06)

MACH  ( 1) =    1.202    BETA  ( 3) =     .000

 SECTION ( 1)LOWER RH MPS NOZ.               DEPENDENT VARIABLE DELCP

X/DE          .0580   .2320   .4060   .5800   .7540   .9280

  Y/DE
   -.389                      .0130
   -.344                             -.0150
   -.336                                      .0000
   -.291                                     -.0050
   -.266                                              .0000
   -.251      .0220
   -.241             -.0120
   -.230                                              .0000
   -.225                      .0000
   -.198                              .0000
   -.168                                      .0000
   -.133                                             -.0030
    .000      .0060   .0870   .0000   .0350   .0110   .0260
    .230                                              .0170
    .266                                              .0000
    .291                                      .0000
    .336                                      .0000
    .344                             -.0070
    .389                      .1350
    .397                              .0000
    .418              .4230
    .434      .0000
    .449                      .0000
    .482              .0000
    .502      .0000

MACH  ( 1) =    1.203    BETA  ( 4) =    3.051

 SECTION ( 1)LOWER RH MPS NOZ.               DEPENDENT VARIABLE DELCP

X/DE          .0580   .2320   .4060   .5800   .7540   .9280

  Y/DE
   -.502      .0000
   -.482              .0000
   -.449                      .0000
   -.434     -.0360
   -.418             -.0020
   -.397                              .0000
   -.389                      .0150
   -.344                              .0010
   -.336                                      .0000
   -.291                                     -.0070
   -.266                                              .0000
   -.251     -.0190
```

```
                                   CAL T14-053 IA36 O2 + T1 + S1 LOWER RH MPS NOZ.                (NUFC06)
MACH  ( 1) =     1.203    BETA  ( 4) =     3.051
 SECTION ( 1)LOWER RH MPS NOZ.                      DEPENDENT VARIABLE DELCP
X/DE         .0580     .2320     .4060     .5800     .7540     .9280

  Y/DE
   -.241              -.0150
   -.230                                                      -.0080
   -.225                        -.0200
   -.198                                  -.0120
   -.168                                             .0030
   -.133                                                      -.0010
    .000     .0270     .0930     .0220     .0040     .0010     .0290
    .230                                                       .0050
    .266                                                       .0000
    .291                                            -.0360
    .336                                             .0000
    .344                                   .0230
    .389                         .2070
    .397                                   .0000
    .418               .5720
    .434     .5710
    .449                         .0000
    .482               .0000
    .502     .0000
MACH  ( 1) =     1.203    BETA  ( 5) =     6.079
 SECTION ( 1)LOWER RH MPS NOZ.                      DEPENDENT VARIABLE DELCP
X/DE         .0580     .2320     .4060     .5800     .7540     .9280

  Y/DE
   -.502     .0000
   -.482               .0000
   -.449                         .0000
   -.434    -.0340
   -.418              -.0090
   -.397                                   .0000
   -.389                         .0430
   -.344                                  -.0220
   -.336                                             .0000
   -.291                                            -.0080
   -.266                                                       .0000
   -.251    -.0130
   -.241              -.0070
   -.230                                                      -.0140
   -.225                        -.0120
   -.198                                  -.0130
   -.168                                            -.0030
   -.133                                                       .0020
```

ORIGINAL PAGE IS POOR

```
DATE 05 NOV 75              TABULATED DATA FOR CAL T14-053 (IA36)                                              PAGE  291

                                       CAL T14-053 IA36 02 + T1 + S1 LOWER RH MPS NOZ.               (NUFC06)

MACH  ( 1) =    1.203    BETA  ( 5) =    6.079

 SECTION ( 1)LOWER RH MPS NOZ.                 DEPENDENT VARIABLE DELCP

X/DE          .0580   .2320   .4060   .5800   .7540   .9280

  Y/DE
    .000      .0080   .0700   .0610   .0730   .0030   .0230
    .230                                              .0050
    .265                                              .0000
    .291                                     -.0240
    .336                                      .0000
    .344                              .0450
    .389                      .2620
    .397                              .0000
    .418              .6620
    .434      .5590
    .449                      .0000
    .482              .0000
    .502      .0000
```

```
                          CAL T14-053 IA36 02 + T1 + S1 LOWER RH MPS NOZ.          (NUF007)   ( 15 DEC 73  )

          REFERENCE DATA                                                                    PARAMETRIC DATA

SREF  =    49.4000 SQ.FT.   XMRP  =   158.0000 INCHES                   BETA   =      .000   POWER  =     1.000
LREF  =    90.7000 INCHES   YMRP  =      .0000 INCHES                   OPR    =    28.310   SRMPR  =     2.020
BREF  =    90.7000 INCHES   ZMRP  =      .0000 INCHES                   GP1    =    11.000   GY1    =    -9.000
SCALE =      .0190 SCALE                                                GP2    =      .000   GY2    =    -9.000
                                                                        GP3    =      .000   GY3    =    -9.000

MACH  ( 1) =    1.199    ALPHA ( 1) =    -8.108

 SECTION ( 1)LOWER RH MPS NOZ.                  DEPENDENT VARIABLE DELCP

X/DE          .0580    .2320    .4060    .5800    .7540    .9280

  Y/DE
   -.502      .0000
   -.482               .0000
   -.449                        .0000
   -.434     -.0630
   -.418              -.1440
   -.397                                 .0000
   -.389                       -.0400
   -.344                                 .0000
   -.336                                          .0000
   -.291                                         -.0380
   -.266                                                   .0000
   -.251     -.1240
   -.241              -.0810
   -.230                                                   .0140
   -.225                       -.0530
   -.198                                 .0030
   -.168                                         -.0330
   -.133                                                   .0110
    .000     -.1690   -.0530   -.0350    .0280   -.0010    .0130
    .230                                                   .0110
    .266                                                   .0000
    .291                                         -.0190
    .336                                          .0000
    .344                                 .0430
    .389                        .2560
    .397                                 .0000
    .418               .6580
    .434      .6370
    .449                        .0000
    .482               .0000
    .502      .0000
```

```
                         CAL T14-053 IA36 C2 + T1 + S1 LOWER RH MPS NOZ.            (NUFC07)

MACH  ( 1) =    1.198   ALPHA ( 2) =   -4.075

 SECTION ( 1)LOWER RH MPS NOZ.             DEPENDENT VARIABLE DELCP

X/DE         .0580   .2320   .4060   .5800   .7540   .9280

  Y/DE
  -.502      .0000
  -.482              .0000
  -.449                      .0000
  -.434     -.0460
  -.418             -.1080
  -.397                              .0000
  -.389                      .0020
  -.344                             -.0020
  -.336                                      .0000
  -.291                                     -.0300
  -.266                                              .0000
  -.251     -.0910
  -.241             -.0720
  -.230                                              .0230
  -.225                     -.0560
  -.198                             -.0060
  -.168                                     -.0390
  -.133                                              .0170
   .000     -.1390  -.0330  -.0310   .0190   .0070   .0340
   .230                                              .0140
   .266                                              .0000
   .291                                     -.0130
   .336                                      .0000
   .344                              .0120
   .389                      .2120
   .397                              .0000
   .418              .5340
   .434      .5640
   .449                      .0000
   .482              .0000
   .502      .0000
MACH  ( 1) =    1.197   ALPHA ( 3) =   -.023

 SECTION ( 1)LOWER RH MPS NOZ              DEPENDENT VARIABLE DELCP

X/DE         .0580   .2320   .4060   .5800   .7540   .9280

  Y/DE
  -.502      .0000
  -.482              .0000
  -.449                      .0000
  -.434     -.0560
  -.418             -.1080
  -.397                              .0000
```

```
                                   CAL T14-053 IA36 02 + T1 - S1 LOWER RH MPS NOZ.            (NUFC07)

MACH  ( 1) =    1.197   ALPHA ( 3) =    -.023

 SECTION ( 1)LOWER RH MPS NOZ.              DEPENDENT VARIABLE DELCP

X/DE        .0580   .2320   .4060   .5800   .7540   .9280

  Y/DE
   -.389                   -.0680
   -.344                           -.0130
   -.336                                    .0000
   -.291                                   -.0140
   -.265                                            .0000
   -.251   -.0800
   -.241           -.0410
   -.230                                            .0250
   -.225                   -.0430
   -.198                           -.0150
   -.168                                   -.0260
   -.133                                            .0060
    .000   -.1190  -.0390  -.0240  -.0090   .0010   .0270
    .230                                           -.0030
    .266                                            .0000
    .291                                    .0040
    .336                                    .0000
    .344                           -.0030
    .389                    .1550
    .397                            .0000
    .418            .4100
    .434    .4460
    .449                    .0000
    .482            .0000
    .502    .0000

MACH  ( 1) =    1.196   ALPHA ( 4) =    4.017

 SECTION ( 1)LOWER RH MPS NOZ.              DEPENDENT VARIABLE DELCP

X/DE        .0560   .2320   .4060   .5800   .7540   .9280

  Y/DE
   -.502    .0000
   -.482            .0000
   -.449                    .0000
   -.434   -.1050
   -.418           -.1050
   -.397                            .0000
   -.389                   -.0530
   -.344                            .0210
   -.336                                    .0000
   -.291                                   -.0040
   -.266                                            .0000
   -.251   -.1750
```

```
                                 CAL T14-053 IA35 02 + T1 + S1 LOWER RH MPS NOZ.              (NUFC07)

MACH  ( 1) =    1.196    ALPHA ( 4) =    4.017

 SECTION ( 1)LOWER RH MPS NOZ.               DEPENDENT VARIABLE DELCP

X/DE        .0580   .2320   .4060   .5800   .7540   .9280

  Y/DE
   -.241           -.0880
   -.230                                           .0250
   -.225                    .0000
   -.198                           -.0110
   -.168                                   -.0280
   -.133                                          -.0160
    .000    .0000   .0000  -.0150   .0180   .0230   .0000
    .230                                           .0190
    .266                                           .0000
    .291                                    .0000
    .336                                    .0000
    .344                           -.0220
    .389                    .0000
    .397                            .0000
    .418            .2140
    .434    .3390
    .449                    .0000
    .482            .0000
    .502    .0000

MACH  ( 1) =    1.200    ALPHA ( 5) =    6.028

 SECTION ( 1)LOWER RH MPS NOZ.               DEPENDENT VARIABLE DELCP

X/DE        .0580   .2320   .4060   .5800   .7540   .9280

  Y/DE
   -.502    .0000
   -.482            .0000
   -.449                    .0000
   -.434   -.1270
   -.418           -.1490
   -.397                            .0000
   -.389                   -.0560
   -.344                            .0100
   -.336                                    .0000
   -.291                                   -.0210
   -.266                                           .0000
   -.251   -.1500
   -.241           -.0960
   -.230                                           .0020
   -.225                    .0000
   -.198                            .0220
   -.168                                   -.0020
   -.133                                           .0000
```

```
DATE 05 NOV 75              TABULATED DATA FOR CAL T14-053 (IA36)                                                        PAGE  295
                                                CAL T14-053 IA36 02 + T1 + S1 LOWER RH MPS NOZ.              (NUFC07)

MACH  ( 1) =     1.200    ALPHA ( 5) =     5.028

 SECTION ( 1)LOWER RH MPS NOZ.                      DEPENDENT VARIABLE DELCP

X/DE          .0580   .2320   .4060   .5800   .7540   .9280

  Y/DE
    .000      .0000   .0000  -.0260   .0130   .0070   .0000
    .230                                              .0200
    .265                                              .0000
    .291                                      .0000
    .336                                      .0000
    .344                             -.0010
    .389                      .0000
    .397                              .0000
    .418              .0990
    .434      .251J
    .449                      .0000
    .482              .0000
    .502      .0000
```

```
                                     CAL T14-053 IA36 O2 + T1 + S1 LOWER RH MPS NOZ.               (NUFC08)   ( 18 DEC 73  )

                 REFERENCE DATA                                                                         PARAMETRIC DATA

SREF  =     49.4000 SQ.FT.   XMRP  =   158.0000 INCHES                               ALPHA  =       .000   POWER  =      1.000
LREF  =     90.7000 INCHES   YMRP  =      .0000 INCHES                               OPR    =     28.310   SRMPR  =      2.020
BREF  =     90.7000 INCHES   ZMRP  =      .0000 INCHES                               GP1    =     11.000   GY1    =     -9.000
SCALE =       .0190 SCALE                                                            GP2    =       .000   GY2    =     -9.000
                                                                                     GP3    =       .000   GY3    =     -9.000

MACH  ( 1) =    1.194    BETA  ( 1) =    -6.074

 SECTION ( 1)LOWER RH MPS NOZ.               DEPENDENT VARIABLE DELCP

X/DE           .0580     .2320     .4060     .5800     .7540     .9280

  Y/DE
   -.502       .0000
   -.482                 .0000
   -.449                           .0000
   -.434      -.1250
   -.418                -.1660
   -.397                                     .0000
   -.389                          -.1000
   -.344                                    -.0430
   -.336                                               .0000
   -.291                                              -.0510
   -.266                                                         .0000
   -.251      -.0690
   -.241                -.0900
   -.230                                                         .0210
   -.225                          -.0710
   -.198                                    -.0200
   -.168                                              -.0490
   -.133                                                         .0030
    .000      -.0780    -.0370    -.0360    -.0060    -.0090     .0050
    .230                                                        -.0010
    .266                                                         .0000
    .291                                              -.0030
    .336                                               .0000
    .344                                    -.0050
    .389                           .0330
    .397                                     .0000
    .418                 .2030
    .434       .3960
    .449                           .0000
    .482                 .0000
    .502       .0000
```

```
                          CAL T14-053 IA36 02 + T1 + S1 LOWER RH MPS NOZ.              (NUFC08)

MACH  ( 1) =    1.194    BETA  ( 2) =    -3.044

 SECTION ( 1)LOWER RH MPS NOZ.               DEPENDENT VARIABLE DELCP

X/DE         .0580     .2320     .4060     .5800     .7540     .9280

  Y/DE
  -.502      .0000
  -.482                .0000
  -.449                          .0000
  -.434     -.0940
  -.418               -.1310
  -.397                                    .0000
  -.389                         -.0900
  -.344                                   -.0230
  -.336                                              .0000
  -.291                                             -.0380
  -.266                                                        .0000
  -.251     -.0730
  -.241               -.0810
  -.230                                                        .0310
  -.225                          .0000
  -.198                                   -.0340
  -.168                                             -.0460
  -.133                                                       -.0060
   .000      .0000     .0000    -.0310    -.0110     .0280     .0000
   .230                                                        .0100
   .266                                                        .0000
   .291                                              .0000
   .336                                              .0000
   .344                                   -.0170
   .389                          .0000
   .397                                    .0000
   .418                .2920
   .434      .3840
   .449                          .0000
   .482                .0000
   .502      .0000

MACH  ( 1) =    1.199    BETA  ( 3) =      .000

 SECTION ( 1)LOWER RH MPS NOZ.               DEPENDENT VARIABLE DELCP

X/DE         .0580     .2320     .4060     .5800     .7540     .9280

  Y/DE
  -.502      .0000
  -.482                .0000
  -.449                          .0000
  -.434     -.0420
  -.418               -.1050
  -.397                                    .0000
```

```
                                   CAL T14-053 IA36 02 + T1 + S1 LOWER RH MPS NOZ.                (NUFC08)

MACH  ( 1) =    1.199   BETA  ( 3) =     .000

 SECTION ( 1)LOWER RH MPS NOZ.              DEPENDENT VARIABLE DELCP

X/DE         .0580   .2320   .4060   .5800   .7540   .9280

  Y/DE
   -.389                    -.0280
   -.344                            -.0290
   -.336                                     .0000
   -.291                                    -.0370
   -.266                                             .0000
   - 251    -.0650
   -.241            -.0320
   -.230                                             .0300
   -.225                    -.0260
   -.198                            -.0300
   -.168                                    -.0370
   -.133                                             .0240
    .000    -.0980  -.0610  -.0140  -.0050   .0180   .0170
    .230                                             .0020
    .266                                             .0000
    .291                                     .0090
    .336                                     .0000
    .344                             .0210
    .389                     .1340
    .397                             .0000
    .418             .3430
    .434     .4210
    .449                     .0000
    .482             .0000
    .502     .0000
MACH  ( 1) =    1.195   BETA  (  ) =     3.049

 SECTION ( 1)LOWER RH MPS NOZ.              DEPENDENT VARIABLE DELCP

X/DE         .0580   .2320   .4060   .5800   .7540   .9280

  Y/DE
   -.502     .0000
   -.482             .0000
   -.449                     .0000
   -.434    -.0920
   -.418            -.1590
   -.397                             .0000
   -.389                    -.0760
   -.344                            -.0350
   -.336                                     .0000
   -.291                                    -.0460
   -.266                                             .0000
   -.251    -.2080
```

```
                          CAL T14-053 IA36 02 + T1 + S1 LOWER RH MPS NOZ.            (NUFC08)

MACH  ( 1) =    1.195   BETA  ( 4) =    3.049

 SECTION ( 1)LOWER RH MPS NOZ.             DEPENDENT VARIABLE DELCP

X/DE       .0580   .2320   .4060   .5800   .7540   .9280

  Y/DE
   -.241          -.0970
   -.230                                           .0240
   -.225                  -.0590
   -.198                          -.0160
   -.168                                  -.0390
   -.133                                          -.0760
    .000  -.1210  -.0430  -.0120   .0100   .0150  -.0880
    .230                                          -.0130
    .266                                           .0000
    .291                                  -.0190
    .336                                   .0000
    .344                          -.0070
    .389                   .2020
    .397                           .0000
    .418           .5260
    .434   .5290
    .449                   .0000
    .482           .0000
    .502   .0000

MACH  ( 1) =    1.197   BETA  ( 5) =    6.079

 SECTION ( 1)LOWER RH MPS NOZ.             DEPENDENT VARIABLE DELCP

X/DE       .0580   .2320   .4060   .5800   .7540   .9280

  Y/DE
   -.502   .0000
   -.482           .0000
   -.449                   .0000
   -.434  -.0450
   -.418          -.1140
   -.397                           .0000
   -.389                  -.0440
   -.344                           .0010
   -.336                                   .0000
   -.291                                  -.0260
   -.266                                           .0000
   -.251  -.1160
   -.241          -.0290
   -.230                                           .0020
   -.225                  -.0600
   -.198                          -.0130
   -.168                                  -.0230
   -.133                                          -.0020
```

```
                                       CAL T14-053 IA36 02 + T1 + S1 LOWER RH MPS NOZ.            (NUFC08)

MACH  ( 1) =    1.197    BETA  ( 5) =    6.079

 SECTION ( 1)LOWER RH MPS NOZ.             DEPENDENT VARIABLE DELCP

X/DE         .0580   .2320   .4060   .5800   .7540   .9280

  Y/DE
    .000   -.1470  -.0230  -.0190  -.0180  -.0140  -.0010
    .230                                           -.0060
    .256                                            .0000
    .291                                   -.0300
    .336                                    .0000
    .344                            .0410
    .389                    .2800
    .397                            .0000
    .418            .5660
    .434    .5580
    .449                    .0000
    .482            .0000
    .502    .0000
```

```
                              CAL T14-053 IA36 02 + T1 + S1 UPPER MPS NOZZLE                     (SUFA01)    ( 18 DEC 73  )

               REFERENCE DATA                                                                     PARAMETRIC DATA

SREF  =     49.4000 SQ.FT.   XMRP  =   158.0000 INCHES                               BETA   =      .000   POWER  =      .000
LREF  =     90.7000 ..CHES   YMRP  =      .0000 INCHES                               GP1    =    11.000   GY1    =    -9.000
BREF  =     90.7000 INCHES   ZMRP  =      .0000 INCHES                               GP2    =      .000   GY2    =    -9.000
SCALE =       .0190 SCALE                                                            GP3    =      .000   GY3    =      .000

MACH  ( 1) =      .901    ALPHA  ( 1) =    -8.088

 SECTION ( 1)UPPER MPS NOZZLE                   DEPENDENT VARIABLE DELCP

X/DE         .0580     .2320     .4060     .5800     .7540     .9280

  Z/DE
   -.502     .0000
   -.482               .0000
   -.449                         .0000
   -.434     .0000
   -.418               .0370
   -.397                                   .0000
   -.389                        -.0030
   -.344                                  -.0170
   -.336                                             .0000
   -.291                                            -.0120
   -.266                                                       .0000
   -.251    -.0030
   -.241               .0300
   -.230                                                       .0210
   -.225                        -.0040
   -.198                                  -.0170
   -.168                                             .0130
   -.133                                                      -.0030
   -.000    -.2500    -.3610    -.1020    -.0050
   -.000              -.3610    -.1020    -.0050     .0070    -.0070
    .133                                                       .0080
    .168                                             .0210
    .198                                  -.0970
    .225                        -.1230
    .230                                                      -.0130
    .241              -.0500
    .251     .6150
    .266                                                       .0000
    .291                                             .0210
    .336                                             .0000
    .344                                   .4610
    .389                         .1540
    .397                                   .0000
    .418               .1100
    .434     .4370
    .449                         .0000
    .482               .0000
    .502     .0000
```

CAL T14-053 IA36 O2 + T1 + S1 UPPER MPS NOZZLE (SUFA01)

MACH (1) = .900 ALPHA (2) = -4.049

SECTION (1)UPPER MPS NOZZLE DEPENDENT VARIABLE DELCP

X/DE	.0580	.2320	.4060	.5800	.7540	.9280
Z/DE						
-.502	.0000					
-.482		.0000				
-.449			.0000			
-.434	.0000					
-.418		.0250				
-.397				.0000		
-.389			.0060			
-.344				-.0180		
-.336					.0000	
-.291					-.0230	
-.266						.0000
-.251	.0020					
-.241		.0090				
-.230						.0160
-.225			-.0020			
-.198				-.0050		
-.168					.0010	
-.133						-.0050
-.000	-.2320	-.3520	-.0870	.0020		
-.000		-.3520	-.0870	.0020	-.0010	.0050
.133						.0150
.168					.0210	
.198				-.0690		
.225			-.0860			
.230						-.0170
.241		-.0510				
.251	.5400					
.266						.0000
.291					.0410	
.336					.0000	
.344				.3530		
.389			.0570			
.397				.0000		
.418		.0960				
.434	.4590					
.449			.0000			
.482		.0000				
.502	.0000					

```
                              CAL T14-053 IA36 O2 + T1 + S1 UPPER MPS NOZZLE               (SUFA01)

MACH  ( 1) =      .900    ALPHA ( 3) =      .013

 SECTION ( 1)UPPER MPS NOZZLE                 DEPENDENT VARIABLE DELCP

X/DE           .0580     .2320     .4060     .5800     .7540     .9280

  Z/DE
  -.502        .0000
  -.482                  .0000
  -.449                            .0000
  -.434       -.0080
  -.418                  .0310
  -.397                                      .0000
  -.389                            .0080
  -.344                                     -.0110
  -.336                                                .0000
  -.291                                               -.0290
  -.266                                                          .0000
  -.251        .0100
  -.241                 -.0040
  -.230                                                          .0320
  -.225                           -.0090
  -.198                                     -.0090
  -.168                                                .0150
  -.133                                                         -.0120
  -.000       -.2020    -.2650    -.0770     .0010
  -.000                 -.2650    -.0770     .0010     .0010    -.0060
   .133                                                          .0020
   .168                                               -.0060
   .198                                     -.0540
   .225                           -.0620
   .230                                                         -.0260
   .241                 -.0370
   .251        .4440
   .266                                                          .0000
   .291                                                .0400
   .336                                                .0000
   .344                                      .3380
   .389                           -.0010
   .397                                      .0000
   .418                  .0510
   .434        .3870
   .449                            .0000
   .482                  .0000
   .502        .0000
```

```
                                     CAL T14-053 IA36 O2 + T1 + S1 UPPER MPS NOZZLE            (SUFA01)

MACH  ( 1) =     .899   ALPHA ( 4) =    4.005

 SECTION ( 1)UPPER MPS NOZZLE                    DEPENDENT VARIABLE DELCP

X/DE             .0580     .2320     .4060     .5800     .7540     .9280

  Z/DE
   -.502         .0000
   -.482                   .0000
   -.449                             .0000
   -.434        -.0080
   -.418                   .0140
   -.397                                       .0000
   -.389                             .0020
   -.344                                      -.0290
   -.336                                                 .0000
   -.291                                                -.0290
   -.266                                                           .0000
   -.251         .0120
   -.241                  -.0230
   -.230                                                           .0360
   -.225                            -.0140
   -.198                                      -.0200
   -.168                                                 .0100
   -.133                                                          -.0060
   -.000        -.1710    -.2290    -.0780    -.0030
   -.000                  -.2290    -.0780    -.0030     .0000    -.0040
    .133                                                           .0050
    .168                                                 .0010
    .198                                      -.0340
    .225                            -.0640
    .230                                                          -.0420
    .241                  -.0390
    .251         .3460
    .266                                                           .0000
    .291                                                 .0380
    .336                                                 .0000
    .344                                       .2750
    .389                            -.0550
    .397                                       .0000
    .418                   .0050
    .434         .3940
    .449                             .0000
    .482                   .0000
    .502         .0000
```

```
                              CAL T14-053 IA36 O2 + T1 + S1 UPPER MPS NOZZLE           (SUFA01)

MACH  ( 1) =      .899    ALPHA ( 5) =    6.006

 SECTION ( 1)UPPER MPS NOZZLE                DEPENDENT VARIABLE DELCP

X/DE         .0580   .2320   .4060   .5800   .7540   .9280

  Z/DE
   -.502     .0000
   -.482             .0000
   -.449                     .0000
   -.434    -.0130
   -.418             .0350
   -.397                             .0000
   -.389                     .0270
   -.344                            -.0150
   -.336                                     .0000
   -.291                                    -.0270
   -.266                                             .0000
   -.251     .0080
   -.241            -.0200
   -.230                                             .0430
   -.225                    -.0320
   -.196                             .0020
   -.168                                     .0260
   -.133                                            -.0310
   -.000    -.1500  -.1850  -.0670  -.0040
   -.000            -.1850  -.0670  -.0040  -.0040  -.0010
    .133                                             .0220
    .168                                    -.0240
    .198                            -.0360
    .225                    -.0570
    .230                                            -.0380
    .241            -.0320
    .251     .3380
    .266                                             .0000
    .291                                     .0380
    .336                                     .0000
    .344                             .2340
    .389                    -.1260
    .397                             .0000
    .418            -.0150
    .434     .3850
    .449                     .0000
    .482             .0000
    .502     .0000
```

```
                          CAL T14-053 IA36 02 + T1 + S1 UPPER MPS NOZZLE            (SUFA02)    ( 18 DEC 73  )

            REFERENCE DATA                                                        PARAMETRIC DATA

SPEF  =    49.4000 SQ.FT.   XMRP  =   158.0000 INCHES                  ALPHA  =      .000   POWER  =      .000
LREF  =    90.7000 INCHES   YMRP  =      .0000 INCHES                  GP1    =    11.000   GY1    =    -9.000
BREF  =    90.7000 INCHES   ZMRP  =      .0000 INCHES                  GP2    =      .000   GY2    =    -9.000
SCALE =      .0190 SCALE                                               GP3    =      .000   GY3    =      .000

MACH  ( 1) =      .901    BETA  ( 1) =   -6.079

 SECTION ( 1)UPPER MPS NOZZLE              DEPENDENT VARIABLE DELCP

X/DE          .0580    .2320    .4060    .5800    .7540    .9280

  Z/DE
     -.502    .0000
     -.482             .0000
     -.449                      .0000
     -.434   -.0040
     -.418             .0230
     -.397                               .0000
     -.389                      .0130
     -.344                              -.0300
     -.336                                        .0000
     -.291                                       -.0050
     -.266                                                 .0000
     -.251    .0160
     -.241            -.0200
     -.230                                                 .0240
     -.225                     -.0240
     -.198                              -.0040
     -.168                                        .0110
     -.135                                                -.0180
     -.000    .0180   -.0500    .0040   -.0030
     -.000            -.0500    .0040   -.0030   -.0110    .0000
      .133                                                 .0120
      .168                                       -.0180
      .198                               .0160
      .225                     -.1280
      .230                                                -.0400
      .241            -.2960
      .251    .0730
      .266                                                 .0000
      .291                                        .0310
      .336                                        .0000
      .344                              -.0290
      .389                     -.0330
      .397                               .0000
      .418             .0600
      .434    .0040
      .449                      .0000
      .482             .0000
      .502    .0000
```

```
                    CAL T14-053 IA36 02 + T1 + S1 UPPER MPS NOZZLE          (SUFA02)

MACH  ( 1) =     .900   BETA  ( 2) =   -3.049

SECTION ( 1)UPPER MPS NOZZLE                   DEPENDENT VARIABLE DELCP

X/DE         .0580     .2320     .4060     .5800     .7540     .9280

  Z/DE
   -.502     .0000
   -.482               .0000
   -.449                         .0000
   -.434     .0080
   -.418               .0160
   -.397                                   .0000
   -.389                         .0040
   -.344                                  -.0040
   -.336                                             .0000
   -.291                                            -.0220
   -.266                                                       .0000
   -.251     .0240
   -.241              -.0130
   -.230                                                       .0230
   -.225                        -.0270
   -.198                                  -.0010
   -.168                                             .0140
   -.133                                                      -.0080
   -.000    -.0390    -.0920    -.0200     .0000
   -.000              -.0920    -.0200     .0000     .0100    -.0020
    .133                                                       .0140
    .168                                            -.0120
    .198                                  -.0260
    .225                        -.1860
    .230                                                      -.0190
    .241              -.2640
    .251     .1680
    .266                                                       .0000
    .291                                             .0010
    .336                                             .0000
    .344                                   .0770
    .389                         .1340
    .397                                   .0000
    .418               .1890
    .434     .1870
    .449                         .0000
    .482               .0000
    .502     .0000
```

```
                    CAL T14-053 IA36 02 + T1 + S1 UPPER MPS NOZZLE                (SUFA02)

MACH  ( 1) =     .901    BETA  ( 3) =     .000

 SECTION ( 1)UPPER MPS NOZZLE               DEPENDENT VARIABLE DELCP

X/DE           .0580     .2320     .4060     .5800     .7540     .9280

  Z/DE
     -.502     .0000
     -.482               .0000
     -.449                         .0000
     -.434     .0020
     -.418               .0220
     -.397                                   .0000
     -.389                        -.0050
     -.344                                  -.0210
     -.336                                             .0000
     -.291                                            -.0190
     -.266                                                       .0000
     -.251     .0120
     -.241              -.0040
     -.230                                                       .0280
     -.225                        -.0200
     -.198                                  -.0070
     -.158                                             .0000
     -.133                                                      -.0040
     -.000    -.1930    -.2690    -.0870     .0010
     -.000              -.2690    -.0870     .0010     .0100    -.0030
      .133                                                       .0040
      .168                                             .0120
      .198                                  -.0550
      .225                        -.0950
      .230                                                      -.0290
      .241              -.0550
      .251     .4160
      .266                                                       .0000
      .291                                             .0270
      .336                                             .0000
      .344                                   .3250
      .389                         .0190
      .397                                   .0000
      .418               .0410
      .434     .4070
      .449                         .0000
      .482               .0000
      .502     .0000
```

```
                            CAL T14-053 IA36 O2 + T1 + S1 UPPER MPS NOZZLE            (SUFA02)

MACH  ( 1) =     .990    BETA  ( 4) =    3.051

 SECTION ( 1)UPPER MPS NOZZLE               DEPENDENT VARIABLE DELCP

X/DE         .0580    .2320    .4060    .5800    .7540    .9280

  Z/DE
   -.502     .0000
   -.482              .0000
   -.449                       .0000
   -.434    -.0180
   -.418              .0180
   -.397                                .0000
   -.389                       .0020
   -.344                               -.0170
   -.336                                         .0000
   -.291                                        -.0210
   -.266                                                  .0000
   -.251    -.0350
   -.241             -.0100
   -.230                                                  .0310
   -.225                      -.0180
   -.198                               -.0070
   -.168                                         .0150
   -.133                                                 -.0160
   -.000    -.2500   -.2450   -.2270   -.0030
   -.000             -.2450   -.2270   -.0030    .0080    .0070
    .133                                                 -.0020
    .168                                         .0120
    .198                               -.0930
    .225                       .1130
    .230                                                 -.0070
    .241              .3510
    .251     .5580
    .266                                                  .0000
    .291                                         .0330
    .336                                         .0000
    .344                                .5230
    .389                      -.0070
    .397                                .0000
    .418              .0790
    .434     .5540
    .449                       .0000
    .432              .0000
    .502     .0000
```

```
DATE 05 NOV 75              TABULATED DATA FOR CAL T14-053 (IA36)                                          PAGE  311

                                    CAL T14-053 IA36 O2 + T1 + S1 UPPER MPS NOZZLE                (SUFA02)

MACH   ( 1) =      .901    BETA   ( 5) =     6.089

 SECTION ( 1)UPPER MPS NOZZLE                DEPENDENT VARIABLE DELCP

X/DE          .0580     .2320     .4000     .5800     .7540     .9280

  Z/DE
   -.502      .0000
   -.482                .0000
   -.449                          .0000
   -.434     -.0410
   -.418                .0070
   -.397                                    .0000
   -.380                         -.0210
   -.344                                   -.0350
   -.336                                              .0000
   -.291                                             -.0170
   -.266                                                        .0000
   -.251     -.0720
   -.241                .0090
   -.230                                                        .0190
   -.225                         -.0250
   -.198                                   -.0010
   -.168                                             -.0020
   -.133                                                       -.0160
   -.000     -.2280    -.0630    -.2380    -.0270
   -.000               -.0630    -.2380    -.0270     .0050    -.0040
    .133                                                        .0060
    .168                                             -.0200
    .198                                   -.1310
    .225                          .2530
    .230                                                       -.0190
    .241                .7470
    .251      .7930
    .266                                                        .0000
    .291                                              .0680
    .336                                              .0000
    .344                                    .7630
    .389                          .0850
    .397                                    .0000
    .418                .1810
    .434      .6780
    .449                          .0000
    .482                .0000
    .502      .0000
```

```
DATE 05 NOV 75          TABULATED DATA FOR CAL T14-053 (IA36)                                           PAGE  312

                                   CAL T14-053 IA36 02 + T1 + S1 UPPER MPS NOZZLE                    (SUFA03)    ( 18 DEC 73  )

                REFERENCE DATA                                                                         PARAMETRIC DATA

SREF  =     49.4000 SQ.FT.   XMRP  =   158.0000 INCHES                           BETA   =       .000   POWER  =      1.000
LREF  =     90.7000 INCHES   YMRP  =      .0000 INCHES                           OPR    =     36.200   SRMPR  =      2.330
BREF  =     90.7000 INCHES   ZMRP  =      .0000 INCHES                           GP1    =     11.000   GY1    =     -9.000
SCALE =       .0190 SCALE                                                        GP2    =       .000   GY2    =     -9.000
                                                                                 GP3    =       .000   GY3    =     -9.000

MACH  ( 1) =     .897    ALPHA ( 1) =     -8.088

 SECTION ( 1)UPPER MPS NOZZLE                DEPENDENT VARIABLE DELCP

X/DE           .0580   .2320   .4060   .5800   .7540   .9280

  Z/DE
   -.502       .0000
   -.482               .0000
   -.449                       .0000
   -.434      -.0130
   -.418              -.0170
   -.397                               .0000
   -.389                      -.0220
   -.344                              -.0230
   -.336                                       .0000
   -.291                                      -.0130
   -.266                                               .0000
   -.251      -.0750
   -.241              -.0250
   -.230                                               .0740
   -.225                      -.0750
   -.198                              -.0350
   -.168                                       .0580
   -.133                                               .0140
   -.000      -.1410  -.3320  -.1560  -.0110
   -.000              -.3320  -.1560  -.0110  -.0100   .0000
    .133                                              -.0350
    .168                                      -.0160
    .198                              -.0840
    .225                      -.1550
    .230                                              -.0370
    .241              -.2800
    .251       .8620
    .266                                               .0000
    .291                                       .0320
    .336                                       .0000
    .344                               .8900
    .389                       .1530
    .397                               .0000
    .418               .1010
    .434       .6480
    .449                       .0000
    .482               .0000
```

```
DATE 05 NOV 75             TABULATED DATA FOR CAL T14-053 (IA36)

                                      CAL T14-053 IA36 02 + T1 + S1 UPPER MPS NOZZLE              (SUFA03)

MACH  ( 1) =     .897    ALPHA ( 1) =    -8.088

 SECTION ( 1)UPPER MPS NOZZLE                  DEPENDENT VARIABLE DELCP

X/DE         .0580   .2320   .4060   .5800   .7540   .9280

  Z/DE
   .502    .0000

MACH  ( 1) =     .899    ALPHA ( 2) =    -4.038

 SECTION ( 1)UPPER MPS NOZZLE                  DEPENDENT VARIABLE DELCP

X/DE         .0580   .2320   .4060   .5800   .7540   .9280

  Z/DE
   -.502   .0000
   -.482           .0000
   -.449                   .0000
   -.434   .0100
   -.418          -.0150
   -.397                           .0000
   -.389                  -.0240
   -.344                          -.0290
   -.336                                   .0000
   -.291                                  -.0070
   -.266                                           .0000
   -.251  -.0350
   -.241           .0370
   -.230                                           .0050
   -.225                  -.0120
   -.198                          -.0240
   -.168                                  -.0180
   -.133                                           .0160
   -.000  -.1170  -.3030  -.1200   .0000
   -.000          -.3030  -.1200   .0000  -.0140  -.0140
    .133                                          -.0270
    .168                                   .0330
    .198                          -.0620
    .225                  -.0820
    .230                                           .0120
    .241          -.1120
    .251   .7410
    .266                                           .0000
    .291                                   .0160
    .336                                   .0000
    .344                           .7090
    .389                   .0640
    .397                           .0000
    .418           .1090
    .434   .7100
    .449                   .0000
```

```
                                    CAL T14-053 IA36 02 + T1 + S1 UPPER MPS NOZZLE                (SUFA03)
MACH  ( 1) =      .899    ALPHA ( 2) =    -4.038

 SECTION ( 1)UPPER MPS NOZZLE                   DEPENDENT VARIABLE DELCP

X/DE          .0580   .2320   .4060   .5800   .7540   .9280

  Z/DE
    .482              .0000
    .502      .0000

MACH  ( 1) =      .901    ALPHA ( 3) =      .001

 SECTION ( 1)UPPER MPS NOZZLE                   DEPENDENT VARIABLE DELCP

X/DE          .0580   .2320   .4060   .5800   .7540   .9280

  Z/DE
   -.502      .0000
   -.482              .0000
   -.449                      .0000
   -.434      .0050
   -.418             -.0140
   -.397                              .0000
   -.389                     -.0170
   -.344                             -.0110
   -.336                                      .0000
   -.291                                     -.0100
   -.266                                              .0000
   -.251     -.0310
   -.241              .0350
   -.230                                             -.0170
   -.225                     -.0100
   -.198                             -.0340
   -.168                                     -.0270
   -.133                                              .0060
   -.000     -.1380  -.3010  -.1320   .0010
   -.000             -.2010  -.1320   .0010  -.0130  -.0110
    .133                                             -.0190
    .168                                      .0220
    .198                             -.0430
    .225                     -.0880
    .230                                              .0160
    .241             -.0990
    .251      .6410
    .266                                              .0000
    .291                                      .0220
    .336                                      .0000
    .344                              .5990
    .389                     -.0130
    .397                              .0000
    .418              .0590
    .434      .6160
```

```
                                   CAL T14-053 IA36 O2 + T1 + S1 UPPER MPS NOZZLE              (SUFA03)

MACH  ( 1) =     .901    ALPHA ( 3) =     .001

 SECTION ( 1)UPPER MPS NOZZLE               DEPENDENT VARIABLE DELCP

X/DE           .0580   .2320   .4060   .5800   .7540   .9280

  Z/DE
     .449                      .0000
     .482              .0000
     .502      .0000

MACH  ( 1) =     .902    ALPHA ( 4) =    4.026

 SECTION ( 1)UPPER MPS NOZZLE               DEPENDENT VARIABLE DELCP

X/DE           .0580   .2320   .4060   .5800   .7540   .9280

  Z/DE
    -.502      .0000
    -.482              .0000
    -.449                      .0000
    -.434      .0030
    -.418             -.0100
    -.397                              .0000
    -.389                     -.0100
    -.344                             -.0250
    -.336                                      .0000
    -.291                                     -.0090
    -.266                                              .0000
    -.251      .0020
    -.241              .0200
    -.230                                             -.0020
    -.225                     -.0020
    -.198                             -.0250
    -.168                                     -.0370
    -.133                                             -.0050
    -.000     -.1290  -.2940  -.1160  -.0030
    -.000             -.2940  -.1160  -.0030  -.0160  -.0150
     .133                                             -.0180
     .168                                      .0360
     .198                             -.0190
     .225                     -.1020
     .230                                             -.0130
     .241             -.1040
     .251      .5220
     .266                                              .0000
     .291                                      .0350
     .336                                      .0000
     .344                              .3640
     .389                     -.1090
     .397                              .0000
     .418              .0160
```

```
                                   CAL T14-053 IA36 O2 + T1 + S1 UPPER MPS NOZZLE                (SUFA03)

MACH  ( 1) =     .902    ALPHA ( 4) =     4.026

 SECTION ( 1)UPPER MPS NOZZLE                DEPENDENT VARIABLE DELCP

X/DE         .0580   .2320   .4060   .5800   .7540   .9280

  Z/DE
    .434    .6000
    .449                    .0000
    .482            .0000
    .502    .0000

MACH  ( 1) =     .898    ALPHA ( 5) =     6.021

 SECTION ( 1)UPPER MPS NOZZLE                DEPENDENT VARIABLE DELCP

X/DE         .0580   .2320   .4060   .5800   .7540   .9280

  Z/DE
   -.502    .0000
   -.482            .0000
   -.449                    .0000
   -.434    .0090
   -.418           -.0080
   -.397                            .0000
   -.389                   -.0050
   -.344                            .0140
   -.336                                    .0000
   -.291                                   -.0130
   -.266                                            .0000
   -.251   -.0310
   -.241           -.0370
   -.230                                            .0290
   -.225                   -.0380
   -.198                           -.0240
   -.168                                    .0360
   -.133                                           -.0070
   -.000   -.1240  -.2790  -.1170   .0020
   -.000           -.2790  -.1170   .0020  -.0070   .0030
    .133                                           -.0120
    .168                                   -.0210
    .198                           -.0200
    .225                   -.1210
    .230                                           -.0500
    .241           -.0790
    .251    .5110
    .266                                            .0000
    .291                                    .0300
    .336                                    .0000
    .344                            .2940
    .389                   -.1620
    .397                            .0000
```

```
DATE 05 NOV 75              TABULATED DATA FOR CAL T14-053 (IA36)                                                  PAGE  317

                                          CAL T14-053 IA36 02 + T1 + S1 UPPER MPS NOZZLE                  (SUFA03)

MACH  ( 1) =      .898    ALPHA ( 5) =     6.021

 SECTION ( 1)UPPER MPS NOZZLE                DEPENDENT VARIABLE DELCP

X/DE         .0580   .2320   .4060   .5800   .7540   .9280

  Z/DE
    .418            -.0040
    .434     .5640
    .449                     .0000
    .482             .0000
    .502     .0000
```

```
                                   CAL T14-053 IA36 02 + T1 + S1 UPPER MPS NOZZLE                 (SUFA04)    ( 18 DEC 73  )

             REFERENCE DATA                                                                              PARAMETRIC DATA

SREF  =     49.4000 SQ.FT.    XMRP  =   158.0000 INCHES                              ALPHA   =       .000   POWER   =      1.000
LREF  =     90.7000 INCHES    YMRP  =      .0000 INCHES                              OPR     =     36.200   SRMPR   =      2.330
BREF  =     90.7000 INCHES    ZMRP  =      .0000 INCHES                              GP1     =     11.000   GY1     =     -9.000
SCALE =       .0190 SCALE                                                            GP2     =       .000   GY2     =     -9.000
                                                                                     GP3     =       .000   GY3     =     -9.000

MACH  ( 1) =      .899    BETA  ( 1) =   -6.078

 SECTION ( 1)UPPER MPS NOZZLE              DEPENDENT VARIABLE DELCP

X/DE        .0580    .2320    .4060    .5800    .7540    .9280

  Z/DE
   -.502    .0000
   -.482             .0000
   -.449                      .0000
   -.434    .0020
   -.418            -.0270
   -.397                               .0000
   -.389                     -.0210
   -.344                              -.0480
   -.336                                        .0000
   -.291                                       -.0380
   -.266                                                 .0000
   -.251   -.0020
   -.241            -.0220
   -.230                                                 .0140
   -.225                     -.0320
   -.198                              -.0380
   -.168                                       -.0130
   -.133                                                 .0090
   -.000   -.0010   -.0370   -.0120    .0020
   -.000            -.0370   -.0120    .0020    .0050   -.0050
    .133                                                -.0180
    .168                                       -.0100
    .198                               .0430
    .225                     -.1650
    .230                                                -.0330
    .241            -.3800
    .251    .1670
    .266                                                 .0000
    .291                                        .0200
    .336                                        .0000
    .344                              -.0280
    .389                     -.0300
    .397                               .0000
    .418             .1300
    .434    .0120
    .449                      .0000
    .482             .0000
```

```
                          CAL T14-053 IA36 O2 + T1 + S1 UPPER MPS NOZZLE                     (SUFA04)

MACH  ( 1) =      .899    BETA  ( 1) =   -6.078

 SECTION ( 1)UPPER MPS NOZZLE                     DEPENDENT VARIABLE DELCP

X/DE          .0580     .2320     .4060     .5800     .7540     .9280

  Z/DE
    .502      .0000

MACH  ( 1) =      .900    BETA  ( 2) =   -3.049

 SECTION ( 1)UPPER MPS NOZZLE                     DEPENDENT VARIABLE DELCP

X/DE          .0580     .2320     .4060     .5800     .7540     .9280

  Z/DE
  -.502       .0000
  -.482                 .0000
  -.449                           .0000
  -.434      -.0110
  -.418                -.0220
  -.397                                     .0000
  -.389                          -.0130
  -.344                                    -.0340
  -.336                                               .0000
  -.291                                              -.0240
  -.266                                                         .0000
  -.251       .0050
  -.241                -.0180
  -.230                                                         .0200
  -.225                          -.0310
  -.198                                    -.0170
  -.168                                               .0030
  -.133                                                         .0010
  -.000      -.1220    -.1190    -.0530     .0080
  -.000                -.1180    -.0530     .0080    -.0040    -.0020
   .133                                                        -.0170
   .168                                              -.0010
   .198                                     .0100
   .225                          -.2770
   .230                                                        -.0450
   .241                -.2760
   .251       .3070
   .266                                                         .0000
   .291                                              -.0040
   .336                                               .0000
   .344                                     .1000
   .389                           .1210
   .397                                     .0000
   .418                 .1750
   .434       .3100
   .449                           .0000
```

```
                         CAL T14-053 IA36 O2 + T1 + S1 UPPER MPS NOZZLE                (SUFA04)

MACH  ( 1) =      .900    BETA  ( 2) =   -3.049

 SECTION ( 1)UPPER MPS NOZZLE               DEPENDENT VARIABLE DELCP

X/DE          .0580   .2320   .4060   .5800   .7540   .9280

  Z/DE
    .482              .0000
    .502      .0000

MACH  ( 1) =      .899    BETA  ( 3) =      .000

 SECTION ( 1)UPPER MPS NOZZLE               DEPENDENT VARIABLE DELCP

X/DE          .0580   .2320   .4060   .5800   .7540   .9280

  Z/DE
   -.502      .0000
   -.482              .0000
   -.449                      .0000
   -.434      .0040
   -.418             -.0130
   -.397                              .0000
   -.389                     -.0220
   -.344                             -.0140
   -.336                                      .0000
   -.291                                     -.0090
   -.266                                              .0000
   -.251     -.0040
   -.241             -.0190
   -.230                                              .0120
   -.225                     -.0250
   -.198                             -.0260
   -.168                                     -.0010
   -.133                                              .0050
   -.000     -.1240  -.3150  -.1300  -.0010
   -.000             -.3150  -.1300  -.0010  -.0080  -.0120
    .133                                             -.0230
    .168                                      .0090
    .198                             -.0440
    .225                     -.0970
    .230                                             -.0290
    .241             -.1020
    .251      .5890
    .266                                              .0000
    .291                                      .0260
    .336                                      .0000
    .344                              .4360
    .389                      .0170
    .397                              .0000
    .418              .0620
    .434      .6100
```

```
                      CAL T14-053 IA36 O2 + T1 + S1 UPPER MPS NOZZLE                 (SUFA04)
MACH  ( 1) =     .899   BETA  ( 3) =     .000
 SECTION ( 1)UPPER MPS NOZZLE                DEPENDENT VARIABLE DELCP
X/DE         .0580    .2320    .4060    .5800    .7540    .9280
 Z/DE
   .449                        .0000
   .482               .0000
   .502      .0000
MACH  ( 1) =     .898   BETA  ( 4) =    3.051
 SECTION ( 1)UPPER MPS NOZZLE                DEPENDENT VARIABLE DELCP
X/DE         .0580    .2320    .4060    .5800    .7540    .9280
 Z/DE
  -.502      .0000
  -.482               .0000
  -.449                        .0000
  -.434     -.0350
  -.418              -.0250
  -.397                                 .0000
  -.389                       -.0240
  -.344                                -.0430
  -.336                                          .0000
  -.291                                         -.0070
  -.266                                                   .0000
  -.251     -.0240
  -.241              -.0030
  -.230                                                   .0220
  -.225                       -.0320
  -.198                                -.0250
  -.168                                         -.0100
  -.133                                                   .0090
  -.000     -.1510   -.1810   -.2630   -.0130
  -.000              -.1810   -.2630   -.0130   -.0060   -.0170
   .133                                                  -.0360
   .168                                          .0020
   .198                                -.1200
   .225                        .2280
   .230                                                  -.0130
   .241               .2820
   .251      .7840
   .266                                                   .0000
   .291                                          .0450
   .336                                          .0000
   .344                                 .6490
   .389                        .0060
   .397                                 .0000
   .418               .0850
```

```
                              CAL T14-053 IA36 O2 + T1 + S1 UPPER MPS NOZZLE              (SUFA04)

MACH  ( 1) =     .898    BETA  ( 4) =    3.051

 SECTION ( 1)UPPER MPS NOZZLE               DEPENDENT VARIABLE DELCP

X/DE          .0580   .2320   .4060   .5800   .7540   .9280

  Z/DE
    .434    .8320
    .449                    .0000
    .482            .0000
    .502    .0000

MACH  ( 1) =     .899    BETA  ( 5) =    6.088

 SECTION ( 1)UPPER MPS NOZZLE               DEPENDENT VARIABLE DELCP

X/DE          .0580   .2320   .4060   .5800   .7540   .9280

  Z/DE
   -.502    .0000
   -.482            .0000
   -.449                    .0000
   -.434   -.0650
   -.418           -.0370
   -.397                            .0000
   -.389                   -.0530
   -.344                           -.0370
   -.336                                    .0000
   -.291                                   -.0080
   -.266                                            .0000
   -.251   -.0560
   -.241            .0130
   -.230                                            .0050
   -.225                   -.0290
   -.198                           -.0260
   -.168                                   -.0240
   -.133                                            .0130
   -.000   -.1880  -.0490  -.2650  -.0280
   -.000           -.0490  -.2650  -.0280   .0030  -.0140
    .133                                           -.0540
    .168                                   -.0130
    .198                           -.1540
    .225                    .3870
    .230                                           -.0240
    .241            .6630
    .251   1.0860
    .266                                            .0000
    .291                                    .0640
    .336                                    .0000
    .344                            .8670
    .389                    .0660
    .397                            .0000
```

```
                                   CAL T14-053 IA36 O2 + T1 + S1 UPPER MPS NOZZLE                (SUFA04)

MACH  ( 1) =     .899   BETA  ( 5) =    6.088

 SECTION ( 1)UPPER MPS NOZZLE               DEPENDENT VARIABLE DELCP

X/DE         .0580   .2320   .4060   .5800   .7540   .9280

  Z/DE
    .418             .2180
    .434     .9550
    .449                     .0000
    .482             .0000
    .502     .0000
```

```
                                   CAL T14-053 IA36 O2 + T1 + S1 UPPER MPS NOZZLE               (SUFA05)   ( 18 DEC 73  )

               REFERENCE DATA                                                                          PARAMETRIC DATA

SREF  =    49.4000 SQ.FT.   XMRP  =   158.0000 INCHES                               BETA   =      .000   POWER  =      .000
LREF  =    90.7000 INCHES   YMRP  =      .0000 INCHES                               GP1    =    11.000   GY1    =    -9.000
BREF  =    90.7000 INCHES   ZMRP  =      .0000 INCHES                               GP2    =      .000   GY2    =    -9.000
SCALE =      .0190 SCALE                                                            GP3    =      .000   GY3    =      .000

MACH  ( 1) =    1.203    ALPHA ( 1) =    -8.101

 SECTION ( 1)UPPER MPS NOZZLE               DEPENDENT VARIABLE DELCP

X/DE          .0580   .2320   .4060   .5800   .7540   .9280

  Z/DE
   -.502      .0000
   -.482              .0000
   -.449                      .0000
   -.434     -.0100
   -.418              .0310
   -.397                              .0000
   -.389                     -.0030
   -.344                              .0010
   -.336                                      .0000
   -.291                                     -.0120
   -.266                                              .0000
   -.251      .0040
   -.241              .1030
   -.230                                              .0250
   -.225                      .0060
   -.198                              .0050
   -.168                                      .0170
   -.133                                              .0130
   -.000      .0060  -.1890  -.1060   .0170
   -.000             -.1890  -.1060   .0170   .0360   .0140
    .133                                              .0190
    .168                                      .0070
    .198                             -.0710
    .225                     -.3730
    .230                                             -.0070
    .241             -.1240
    .251      .9180
    .266                                              .0000
    .291                                      .0820
    .336                                      .0000
    .344                              .4920
    .389                      .0980
    .397                              .0000
    .418              .0100
    .434      .5330
    .449                      .0000
    .482              .0000
    .502      .0000
```

```
DATE 05 NOV 75           TABULATED DATA FOR CAL T14-053 (IA36)                                      PAGE  325

                                   CAL T14-053 IA36 O2 + T1 + S1 UPPER MPS NOZZLE              (SUFA05)

MACH  ( 1) =    1.202    ALPHA ( 2) =   -4.038

 SECTION ( 1)UPPER MPS NOZZLE                    DEPENDENT VARIABLE DELCP

X/DE         .0580   .2320   .4060   .5800   .7540   .9280

  Z/DE
   -.502     .0000
   -.482             .0000
   -.449                     .0000
   -.434     .0120
   -.418             .0260
   -.397                             .0000
   -.389                   -.0040
   -.344                           -.0080
   -.336                                     .0000
   -.291                                   -.0110
   -.266                                             .0000
   -.251     .0150
   -.241             .0460
   -.230                                             .0280
   -.225                   -.0070
   -.198                           -.0040
   -.168                                     .0170
   -.133                                             .0070
   -.000   -.0910  -.2480  -.0680    .0030
   -.000           -.2480  -.0680    .0030   .0320   .0080
    .133                                             .0220
    .168                                   -.0090
    .198                           -.0280
    .225                   -.2770
    .230                                           -.0170
    .241           -.1200
    .251     .8420
    .266                                             .0000
    .291                                     .0500
    .336                                     .0000
    .344                             .5440
    .369                     .1310
    .397                             .0000
    .418             .0930
    .434     .4980
    .449                     .0000
    .482             .0000
    .502     .0000
```

CAL T14-053 IA36 02 + T1 + S1 UPPER MPS NOZZLE (SUFA05)

MACH (1) = 1.203 ALPHA (3) = -.011

SECTION (1)UPPER MPS NOZZLE DEPENDENT VARIABLE DELCP

X/DE	.0580	.2320	.4060	.5800	.7540	.9280
Z/DE						
-.502	.0000					
-.482		.0000				
-.449			.0000			
-.434	.0110					
-.418		.0230				
-.397				.0000		
-.389			.0050			
-.344				-.0120		
-.336					.0000	
-.291					-.0170	
-.266						.0000
-.251	.0100					
-.241		.0160				
-.230						.0340
-.225			-.0130			
-.198				-.0130		
-.168					.0190	
-.133						.0010
-.000	-.1200	-.3290	-.0470	.0000		
-.000		-.3290	-.0470	.0000	.0200	.0070
.133						.0100
.168					.0130	
.198				-.0080		
.225			-.2040			
.230						-.0290
.241		-.0780				
.251	.6500					
.266						.0000
.291					.0410	
.336					.0000	
.344				.5550		
.389			.1570			
.397				.0000		
.418		.1400				
.434	.5200					
.449			.0000			
.482		.0000				
.502	.0000					

```
DATE 05 NOV 75            TABULATED DATA FOR CAL T14-053 (IA36)                                          PAGE  327

                                CAL T14-053 IA36 02 + T1 - S1 UPPER MPS NOZZLE                (SUFA05)

MACH  ( 1) =     1.203    ALPHA ( 4) =     4.003

 SECTION ( 1)UPPER MPS NOZZLE                DEPENDENT VARIABLE DELCP

X/DE         .0580   .2320   .4060   .5800   .7540   .9280

  Z/DE
     -.502   .0000
     -.482           .0000
     -.449                   .0000
     -.434   .0260
     -.418           .0060
     -.397                           .0000
     -.389                  -.0080
     -.344                          -.0110
     -.336                                   .0000
     -.291                                  -.0230
     -.266                                           .0000
     -.251  -.0070
     -.241           .0360
     -.230                                           .0250
     -.225                  -.0260
     -.198                          -.0240
     -.168                                   .0180
     -.133                                           .0070
     -.000  -.1010  -.2820  -.0080  -.0070
     -.000          -.2820  -.0080  -.0070   .0050  -.0030
      .133                                           .0060
      .168                                  -.0010
      .198                           .0290
      .225                  -.1780
      .230                                          -.0200
      .241          -.0460
      .251   .4770
      .266                                           .0000
      .291                                   .0370
      .336                                   .0000
      .344                           .4800
      .389                   .0350
      .397                           .0000
      .418           .0340
      .434   .4460
      .449                   .0000
      .482           .0000
      .502   .0000
```

CAL T14-053 IA36 02 + T1 + S1 UPPER MPS NOZZLE (SUFA05)

MACH (1) = 1.202 ALPHA (5) = 6.018

SECTION (1)UPPER MPS NOZZLE DEPENDENT VARIABLE DELCP

X/DE	.0580	.2320	.4060	.5800	.7540	.9280
Z/DE						
-.502	.0000					
-.482		.0000				
-.449			.0000			
-.434	.0360					
-.418		.0010				
-.397				.0000		
-.389			-.0150			
-.344				-.0080		
-.336					.0000	
-.291					-.0180	
-.266						.0000
-.251	-.0150					
-.241		.0220				
-.230						.0360
-.225			-.0340			
-.198				-.0300		
-.168					.0300	
-.133						.0100
-.000	-.0670	-.2050	.0040	-.0070		
-.000		-.2050	.0040	-.0070	.0010	.0010
.133						.0100
.168					-.0120	
.198				.0510		
.225			-.1680			
.230						-.0240
.241		-.0120				
.251	.3950					
.266						.0000
.291					.0300	
.336					.0000	
.344				.4020		
.389			-.2150			
.397				.0000		
.418		-.1280				
.434	.4790					
.449			.0000			
.482		.0000				
.502	.0000					

```
DATE 05 NOV 75            TABULATED DATA FOR CAL T14-053 (IA36)                                              PAGE  323

                                    CAL T14-053 IA36 O2 + T1 + S1 UPPER MPS NOZZLE                 (SUFA06)    ( 18 DEC 73  )

            REFERENCE DATA                                                                          PARAMETRIC DATA

SREF  =    49.4000 SQ.FT.   XMRP  =   158.0000 INCHES                              ALPHA  =       .000   POWER  =      .000
LREF  =    90.7000 INCHES   YMRP  =      .0000 INCHES                              GP1    =     11.000   GY1    =    -9.000
BREF  =    90.7000 INCHES   ZMRP  =      .0000 INCHES                              GP2    =       .000   GY2    =    -9.000
SCALE =      .0190 SCALE                                                           GP3    =       .000   GY3    =      .000

MACH  ( 1) =     1.202     BETA  ( 1) =    -6.079

 SECTION ( 1)UPPER MPS NOZZLE                   DEPENDENT VARIABLE DELCP

X/DE       .0580    .2320    .4060    .5800    .7540    .9280

 Z/DE
   -.502    .0000
   -.482             .0000
   -.449                      .0000
   -.434    .0280
   -.418             .0200
   -.397                               .0000
   -.389                      .0000
   -.344                              -.0130
   -.336                                        .0000
   -.291                                       -.0170
   -.266                                                 .0000
   -.251    .0270
   -.241             .0830
   -.230                                                 .0300
   -.225                     -.0080
   -.198                              -.0140
   -.168                                        .0150
   -.133                                                 .0070
   -.000   -.0970   -.2900    .0740   -.0010
   -.000            -.2900    .0740   -.0010    .0050    .0050
    .133                                                -.0030
    .168                                       -.0020
    .198                               .0000
    .225                     -.3940
    .230                                                -.0290
    .241            -.5410
    .251    .0700
    .266                                                 .0000
    .291                                        .0050
    .336                                        .0000
    .344                              -.0600
    .389                      .2180
    .397                               .0000
    .418             .2390
    .434    .1160
    .449                      .0000
    .482             .0000
    .502    .0000
```

```
                  CAL T14-053 IA36 02 + T1 + S1 UPPER MPS NOZZLE              (SUFA06)

MACH  ( 1) =    1.202    BETA  ( 2) =    -3.051

 SECTION ( 1)UPPER MPS NOZZLE              DEPENDENT VARIABLE DELCP

X/DE          .0580     .2320     .4060     .5800     .7540     .9280

  Z/DE
   -.502      .0000
   -.482                .0000
   -.449                          .0000
   -.434      .0130
   -.418                .0130
   -.397                                    .0000
   -.389                          .0080
   -.344                                   -.0090
   -.336                                              .0000
   -.291                                             -.0080
   -.266                                                        .0000
   -.251      .0010
   -.241                .0490
   -.230                                                        .0340
   -.225                         -.0130
   -.198                                   -.0080
   -.168                                              .0240
   -.133                                                        .0070
   -.000     -.1460    -.3170    -.0030    -.0100
   -.000               -.3170    -.0030    -.0100     .0100     .0010
    .133                                                       -.0020
    .168                                              .0260
    .198                                   -.0470
    .225                         -.4690
    .230                                                       -.0340
    .241               -.3530
    .251      .2400
    .266                                                        .0000
    .291                                              .0170
    .336                                              .0000
    .344                                    .1710
    .389                          .2200
    .397                                    .0000
    .418                .1340
    .434      .2530
    .449                          .0000
    .482                .0000
    .502      .0000
```

```
DATE 05 NOV 75            TABULATED DATA FOR CAL T14-053 (IA36)                                          PAGE  33

                                        CAL T14-053 (IA36 02 + T1 + S1 UPPER MPS NOZZLE

MACH  ( 1) =     1.202    BETA  ( 3) =       .000

 SECTION ( 1)UPPER MPS NOZZLE                   DEPENDENT VARIABLE DELCP

X/DE           .0580     .2320     .4060     .5800     .7540     .9280

  Z/DE
   -.502       .0000
   -.482                 .0000
   -.449                           .0000
   -.434       .0180
   -.418                 .0170
   -.397                                     .0000
   -.389                          -.0040
   -.344                                     .0000
   -.335                                               .0000
   -.291                                              -.0070
   -.266                                                         .0000
   -.251       .0000
   -.241                 .0210
   -.230                                                         .0340
   -.225                          -.0100
   -.198                                    -.0080
   -.168                                               .0000
   -.133                                                         .0110
   -.000      -.1050    -.3350    -.0470    -.0020
   -.000                -.3350    -.0470    -.0020     .0200     .0000
    .133                                                         .0020
    .168                                               .0000
    .198                                    -.0080
    .225                          -.2330
    .230                                                        -.0260
    .241                -.0730
    .251       .0000
    .266                                                         .0000
    .291                                               .0400
    .336                                               .0000
    .344                                     .0000
    .389                           .0000
    .397                                     .0000
    .418                 .0000
    .434       .5100
    .449                           .0000
    .482                 .0000
    .502       .0000
```

```
                          CAL T14-053 IA36 O2 + T1 + S1 UPPER MPS NOZZLE               (SUFA06)

MACH  ( 1) =    1.203    BETA  ( 4) =    3.051

 SECTION ( 1)UPPER MPS NOZZLE               DEPENDENT VARIABLE DELC

X/DE       .0580   .2320   .4060   .5800   .7540   .9280

 Z/DE
  -.502    .0000
  -.482            .0000
  -.449                    .0000
  -.434     0090
  -.418            .0080
  -.397                            .0000
  -.389                   -.0310
  -.344                           -.0130
  -.336                                    .0000
  -.291                                   -.0180
  -.266                                            .0000
  -.251   -.0600
  -.241            .0130
  -.230                                            .0310
  -.225                   -.0360
  -.198                           -.0210
  -.168                                    .0180
  -.133                                           -.0020
  -.000   -.1330  -.2750  -.2130  -.0310
  -.000           -.2750  -.2130  -.0310   .0050   .0000
   .133                                            .0150
   .168                                   -.0310
   .198                           -.0240
   .225                    .0740
   .230                                           -.0270
   .241            .4740
   .251    .8100
   .266                                            .0000
   .291                                    .0560
   .336                                    .0000
   .344                            .7420
   .389                    .0780
   .397                            .0000
   .418            .0560
   .434    .6900
   .449                    .0000
   .482            .0000
   .502    .0000
```

```
DATE 05 NOV 75            TABULATED DATA FOR CAL T14-053 (IA36)                                          PAGE  333
                                    CAL T14-053 IA36 02 + T1 + S1 UPPER MPS NOZZLE                (SUFA06)

MACH  ( 1) =    1.203   BETA  ( 5) =    6.079

 SECTION ( 1)UPPER MPS NOZZLE                DEPENDENT VARIABLE DELCP

X/DE        .0580    .2320    .4060    .5800    .7540    .9280

  Z/DE
   -.502    .0000
   -.482             .0000
   -.449                      .0000
   -.434    .0010
   -.418            -.0060
   -.397                               .0000
   -.389                     -.0360
   -.344                              -.0200
   -.336                                        .0000
   -.291                                       -.0250
   -.266                                                 .0000
   -.251   -.0520
   -.241            -.0400
   -.230                                                 .0300
   -.225                     -.0430
   -.198                              -.0370
   -.168                                        .0140
   -.133                                                 .0020
   -.000   -.1560   -.1990   -.2600   -.0240
   -.000            -.1930   -.2600   -.0240    .0000   -.0020
    .133                                                 .0150
    .168                                       -.0340
    .198                              -.0450
    .225                      .1330
    .230                                                -.0270
    .241             .9210
    .251   1.0910
    .266                                                 .0000
    .291                                        .1010
    .336                                        .0000
    .344                               .8750
    .389                      .1270
    .397                               .0000
    .418             .1160
    .434    .8700
    .449                      .0000
    .482             .0000
    .502    .0000
```

```
                         CAL T14-053 IA36 O2 + T1 + S1 UPPER MPS NOZZLE          (SUFA07)   ( 18 DEC 73  )

           REFERENCE DATA                                                         PARAMETRIC DATA

SREF  =    49.4000 SQ.FT.   XMRP  =   158.0000 INCHES                     BETA  =       .000   POWER  =     1.000
LREF  =    90.7000 INCHES   YMRP  =      .0000 INCHES                     CPR   =     28.310   SRMPR  =     2.020
BREF  =    90.7000 INCHES   ZMRP  =      .0000 INCHES                     GP1   =     11.000   GY1    =    -9.000
SCALE =      .0190 SCALE                                                  GP2   =       .000   GY2    =    -9.000
                                                                          GP3   =       .000   GY3    =    -9.000

MACH  ( 1) =     1.199    ALPHA ( 1) =    -8.108

 SECTION ( 1)UPPER MPS NOZZLE                DEPENDENT VARIABLE DELCP

X/DE           .0580     .2320     .4060     .5800     .7540     .9280

  Z/DE
  -.502        .0000
  -.482                  .0000
  -.449                            .0000
  -.434       -.0310
  -.418                 -.0010
  -.397                                      .0000
  -.389                           -.0060
  -.344                                     -.0230
  -.336                                                .0000
  -.291                                               -.0230
  -.266                                                          .0000
  -.251       -.0450
  -.241                  .1610
  -.230                                                          .0090
  -.225                           -.0380
  -.198                                     -.0440
  -.168                                               -.0150
  -.133                                                         -.0010
  -.000       -.0200    -.3560    -.0280    -.0050
  -.000                 -.3560    -.0290    -.0050    -.0030     .0120
   .133                                                         -.0060
   .168                                                .0680
   .198                                     -.0480
   .225                           -.4450
   .230                                                          .0080
   .241                 -.1170
   .251        .9760
   .266                                                          .0000
   .291                                                .0900
   .336                                                .0000
   .344                                      .4790
   .389                            .1150
   .397                                      .0000
   .418                  .0260
   .434        .5210
   .449                            .0000
   .482                  .0000
```

```
                              CAL T14-053 IA36 02 + T1 + S1 UPPER MPS NOZZLE               (SUFA07)

MACH  ( 1) =    1.199   ALPHA ( 1) =   -8.108

 SECTION ( 1)UPPER MPS NOZZLE                DEPENDENT VARIABLE DELCP

X/DE        .0580   .2320   .4060   .5800   .7540   .9280

  Z/DE
   .502     .0000

MACH  ( 1) =    1.198   ALPHA ( 2) =   -4.07

 SECTION ( 1)UPPER MPS NOZZLE                DEPENDENT VARIABLE DELCP

X/DE        .0580   .2320   .4060   .5800   .7540   .9280

  Z/DE
   -.502    .0000
   -.482            .0000
   -.449                    .0000
   -.434   -.0190
   -.418           -.0200
   -.397                            .0000
   -.389                   -.0170
   -.344                           -.0340
   -.336                                    .0000
   -.291                                   -.0330
   -.266                                            .0000
   -.251   -.0780
   -.241            .0970
   -.230                                            .0290
   -.225                   -.0600
   -.198                           -.0300
   -.168                                    .0190
   -.133                                            .0180
   -.000   -.0540  -.3310   .0150  -.0110
   -.000           -.3310   .0150  -.0110   .0020   .0170
    .133                                            .0100
    .168                                    .0380
    .198                            .0070
    .225                   -.3240
    .230                                           -.0180
    .241           -.1920
    .251    .0590
    .266                                            .0000
    .291                                    .0600
    .330                                    .0000
    .344                            .5750
    .389                    .1680
    .397                            .0000
    .418            .0840
    .434    .4860
    .449                    .0000
```

CAL T14-053 IA36 02 + T1 + S1 UPPER MPS NOZZLE (SUFA07)

MACH (1) = 1.198 ALPHA (2) = -4.075

SECTION (1)UPPER MPS NOZZLE DEPENDENT VARIABLE DELCP

X/DE	.0580	.2320	.4060	.5800	.7540	.9280
Z/DE						
.462		.0000				
.502	.0000					

MACH (1) = 1.197 ALPHA (3) = -.023

SECTION (1)UPPER MPS NOZZLE DEPENDENT VARIABLE DELCP

X/DE	.0580	.2320	.4060	.5800	.7540	.9280
Z/DE						
-.502	.0000					
-.482		.0000				
-.449			.0000			
-.434	-.0050					
-.418		-.0330				
-.397				.0000		
-.389			-.0280			
-.344				-.0350		
-.336					.0000	
-.291					-.0330	
-.266						.0000
-.251	-.0990					
-.241		.0690				
-.230						.0250
-.225			-.0590			
-.198				-.0340		
-.168					.0130	
-.133						.0270
-.000	-.0910	-.3300	-.0280	-.0220		
-.000		-.3300	-.0280	-.0220	.0040	.0310
.133						-.0130
.168					.0450	
.198				.0210		
.225			-.2540			
.230						-.0120
.241		-.1800				
.251	.6220					
.266						.0000
.291					.0240	
.336					.0000	
.344				.5640		
.389			.1850			
.397				.0000		
.418		.1400				
.434	.5070					

```
                     CAL T14-053 IA36 02 + T1 + S1 UPPER MPS NOZZLE          (SUFA07)

MACH  ( 1) =    1.197   ALPHA ( 3) =    -.023

 SECTION ( 1)UPPER MPS NOZZLE               DEPENDENT VARIABLE DELCP

X/DE         .0580  .2320  .4060  .5800  .7540  .9280

  Z/DE
    .449                   .0000
    .482            .0000
    .502     .0000

MACH  ( 1) =    1.196   ALPHA ( 4) =    4.017

 SECTION ( 1)UPPER MPS NOZZLE               DEPENDENT VARIABLE DELCP

X/DE         .0580  .2320  .4060  .5800  .7540  .9280

  Z/DE
   -.502     .0000
   -.482            .0000
   -.449                   .0000
   -.434     .0040
   -.418            .0500
   -.397                          .0000
   -.389                   .0490
   -.344                         -.0270
   -.335                                 .0000
   -.291                                -.0220
   -.266                                        .0000
   -.251    -.0760
   -.241            .0000
   -.230                                        .0000
   -.225                   .0000
   -.198                          .0010
   -.168                                 .0000
   -.133                                       -.0210
   -.000    -.0290 -.2530 -.0270  .0000
   -.000           -.2530 -.0270  .0000  .0080  .0260
    .133                                        .0200
    .168                                 .0000
    .198                          .0070
    .225                  -.2050
    .230                                        .0000
    .241            .0000
    .251     .4960
    .266                                        .0000
    .291                                 .0310
    .336                                 .0000
    .344                          .4570
    .389                   .0150
    .397                          .0000
    .418            .0400
```

```
                         CAL T14-053 IA36 O2 + T1 + S1 UPPER MPS NOZZLE             (SUFA07)

MACH  ( 1) =    1.196    ALPHA ( 4) =    4.017

 SECTION ( 1)UPPER MPS NOZZLE                DEPENDENT VARIABLE DELCP

X/DE        .0580   .2320   .4060   .5800   .7540   .9280

  Z/DE
     .434   .4560
     .449                   .0000
     .482           .0000
     .502   .0000

MACH  ( 1) =    1.200    ALPHA ( 5) =    6.028

 SECTION ( 1)UPPER MPS NOZZLE                DEPENDENT VARIABLE DELCP

X/DE        .0580   .2320   .4060   .5800   .7540   .9280

  Z/DE
    -.502   .0000
    -.482           .0000
    -.449                   .0000
    -.434   .0300
    -.418           .0690
    -.397                           .0000
    -.389                   .0470
    -.344                           .0040
    -.336                                   .0000
    -.291                                  -.0370
    -.266                                           .0000
    -.251  -.0510
    -.241           .0000
    -.230                                           .0000
    -.225                   .0000
    -.198                          -.0150
    -.168                                   .0000
    -.133                                          -.0110
    -.000   .0100  -.2140  -.0050   .0000
    -.000          -.2140  -.0050   .0000   .0150   .0250
     .133                                           .0190
     .168                                   .0000
     .198                           .0190
     .225                  -.1970
     .230                                           .0000
     .241           .0000
     .251   .3990
     .266                                           .0000
     .291                                   .0410
     .336                                   .0000
     .344                           .3720
     .389                  -.1950
     .397                           .0000
```

```
                                     CAL T14-053 IA36 02 + T1 + S1 UPPER MPS NOZZLE                (SUFA07)

MACH  ( 1) =     1.200    ALPHA ( 5) =     6.028

 SECTION ( 1)UPPER MPS NOZZLE                    DEPENDENT VARIABLE DELCP

X/DE         .0580   .2320   .4060   .5800   .7540   .9280

  Z/DE
    .418             -.1450
    .434     .4900
    .449                     .0000
    .482             .0000
    .502     .0000
```

REPRODUCIBILITY OF THE

```
                                             CAL T14-053 IA36 O2 + T1 + S1 UPPER MPS NOZZLE                (SUFA08)   ( 18 DEC 73  )

           REFERENCE DATA                                                                                   PARAMETRIC DATA

SREF  =     49.4000 SQ.FT.   XMRP  =   158.0000 INCHES                                  ALPHA   =       .000  POWER   =      1.000
LREF  =     90.7000 INCHES   YMRP  =      .0000 INCHES                                  OPP     =     26.3.0  SRMFR   =      2.020
BREF  =     90.7000 INCHES   ZMRP  =      .0000 INCHES                                  GP1     =     11.000  GY1     =     -9.000
SCALE =       .0190 SCALE                                                               GP2     =       .000  GY2     =     -9.000
                                                                                        GP3     =       .000  GY3     =     -9.000

MACH  ( 1) =     1.194    BETA  ( 1) =    -6.074

 SECTION ( 1)UPPER MPS NOZZLE                DEPENDENT VARIABLE DELCP

X/DE        .0580   .2320   .4060   .5800   .7540   .9280

  Z/DE
   -.502    .0000
   -.482            .0000
   -.449                    .0000
   -.434    .0230
   -.418            .0430
   -.397                            .0000
   -.389                   -.0100
   -.344                           -.0420
   -.336                                    .0000
   -.291                                   -.0290
   -.266                                            .0000
   -.251    .0340
   -.241            .1030
   -.230                                            .0210
   -.225                   -.0510
   -.198                           -.0300
   -.168                                   -.0230
   -.133                                            .0080
   -.000    .0830  -.3020   .1040   .0100
   -.000           -.3020   .1040   .0100   .0040   .0020
    .133                                           -.0200
    .168                                    .0240
    .198                            .0290
    .225                   -.4370
    .230                                            .0180
    .241           -.5800
    .251    .0320
    .266                                            .0000
    .291                                   -.0320
    .336                                    .0000
    .344                           -.0710
    .389                    .0730
    .397                            .0000
    .418            .0000
    .434    .1250
    .449                    .0000
    .482            .0000
```

```
                            CAL T14-053 IA36 02 + T1 + S1 UPPER MPS NOZZLE                     (SUFA08)

MACH  ( 1) =    1.194   BETA  ( 1) =   -6.074

 SECTION ( 1)UPPER MPS NOZZLE               DEPENDENT VARIABLE DELCP

X/DE        .0580   .2320   .4060   .5800   .7540   .9280

  Z/DE
   -.502    .0000

MACH  ( 1) =    1.194   BETA  ( 2) =   -3.044

 SECTION ( 1)UPPER MPS NOZZLE               DEPENDENT VARIABLE DELCP

X/DE        .0580   .2320   .4060   .5800   .7540   .9280

  Z/DE
   -.502    .0000
   -.482            .0000
   -.449                    .0000
   -.434   -.0110
   -.418            .0020
   -.397                            .0000
   -.389                   -.0070
   -.344                           -.0490
   -.336                                    .0000
   -.291                                   -.0370
   -.266                                            .0000
   -.251    .0160
   -.241            .0000
   -.230                                            .0000
   -.225                    .0000
   -.198                           -.0250
   -.168                                    .0000
   -.133                                           -.0060
   -.000   -.0120  -.3180   .0610   .0000
   -.000           -.3180   .0610   .0000   .0010   .0080
    .133                                           -.0110
    .168                                    .0000
    .198                           -.0460
    .225                   -.5050
    .230                                            .0000
    .241            .0000
    .251    .1980
    .266                                            .0000
    .291                                    .0330
    .336                                    .0000
    .344                            .2310
    .389                    .1970
    .397                            .0000
    .418            .1480
    .434    .2600
    .449                    .0000
```

```
                              CAL T14-053 IA36 02 + T1 + S1 UPPER MPS NOZZLE          (SUFACB)

MACH  ( 1) =    1.194    BETA  ( 2) =    -3.044

 SECTION ( 1)UPPER MPS NOZZLE            DEPENDENT VARIABLE DELCP

X/DE        .0580   .2320   .4060   .5800   .7540   .9280

  Z/DE
    .482            .0000
    .502    .0000

MACH  ( 1) =    1.199    BETA  ( 3) =     .000

 SECTION ( 1)UPPER MPS NOZZLE            DEPENDENT VARIABLE DELCP

X/DE        .0580   .2320   .4060   .5800   .7540   .9280

  Z/DE
   -.502    .0000
   -.482            .0000
   -.449                    .0000
   -.434    .0130
   -.418           -.0180
   -.397                            .0000
   -.389                   -.0190
   -.344                           -.0450
   -.336                                    .0000
   -.291                                   -.0510
   -.266                                            .0000
   -.251   -.0970
   -.241            .0920
   -.230                                            .0260
   -.225                   -.0470
   -.198                           -.0480
   -.168                                    .0010
   -.133                                            .0220
   -.000   -.0630  -.3410  -.0180  -.0200
   -.000           -.3410  -.0180  -.0200  -.0030   .0120
    .133                                           -.0190
    .168                                    .0530
    .198                            .0430
    .225                   -.2470
    .230                                            .0070
    .241           -.2720
    .251    .6220
    .266                                            .0000
    .291                                    .0470
    .336                                    .0000
    .344                            .5820
    .389                    .1270
    .397                            .0000
    .418            .1510
    .434    .5010
```

CAL T14-053 IA36 U2 + T1 + S1 UPPER MPS NOZZLE (SUFA08)

MACH (1) = 1.199 BETA (3) = .000

SECTION (1)UPPER MPS NOZZLE DEPENDENT VARIABLE DELCP

X/DE	.0580	.2320	.4050	.5800	.7540	.9280
Z/DE						
.449			.0000			
.482		.0000				
.502	.0000					

MACH (1) = 1.195 BETA (4) = 3.049

SECTION (1)UPPER MPS NOZZLE DEPENDENT VARIABLE DELCP

X/DE	.0580	.2320	.4060	.5800	.7540	.9280
Z/DE						
-.502	.0000					
-.482		.0000				
-.449			.0000			
-.434	-.0220					
-.418		-.0410				
-.397				.0000		
-.389			-.0480			
-.344				-.0300		
-.336					.0000	
-.291					.0290	
-.266						.0000
-.251	-.0540					
-.241		-.0090				
-.230						.0280
-.225			-.0350			
-.198				.0580		
-.163					.0080	
-.133						.0290
-.000	-.1850	-.2230	-.0850	-.0290		
-.000		-.2230	-.0850	-.0290	.0120	.0100
.133						-.0130
.163					.0200	
.198				-.0300		
.225			.0640			
.230						-.0110
.241		.0980				
.251	.9350					
.266						.0000
.291					.0280	
.336					.0000	
.344				.7370		
.389			.0280			
.397				.0000		
.418		.0700				

```
                                   CAL T14-053 IA36 02 + T1 + S1 UPPER MPS NOZZLE                (SUFA08)

MACH  ( 1) =    1.195    BETA  ( 4) =    3.049

 SECTION ( 1)UPPER MPS NOZZLE                    DEPENDENT VARIABLE DELCP

X/DE          .0580   .2320   .4060   .5800   .7540   .9280

  Z/DE
    .434      .6860
    .449                      .0000
    .482              .0000
    .502      .0000

MACH  ( 1) =    1.197    BETA  ( 5) =    6.079

 SECTION ( 1)UPPER MPS NOZZLE                    DEPENDENT VARIABLE DELCP

X/DE          .0580   .2320   .4060   .5800   .7540   .9280

  Z/DE
   -.502      .0000
   -.482              .0000
   -.449                      .0000
   -.434     -.0710
   -.418             -.0430
   -.397                              .0000
   -.389                     -.0420
   -.344                             -.0350
   -.336                                      .0000
   -.291                                     -.0260
   -.266                                              .0000
   -.251     -.0690
   -.241             -.0150
   -.230                                              .0270
   -.225                     -.0130
   -.198                             -.0160
   -.168                                      .0160
   -.133                                             -.0200
   -.000     -.2490  -.1630  -.3000  -.0230
   -.000             -.1630  -.3000  -.0230   .0010   .0080
    .133                                             -.0320
    .168                                      .0170
    .198                             -.0740
    .225                      .1210
    .230                                              .0000
    .24!              .5700
    .251     1.2420
    .266                                              .0000
    .291                                      .0450
    .336                                      .0000
    .344                              .8670
    .389                      .0780
    .397                              .0000
```

```
DATE 05 NOV 75           TABULATED DATA FOR CAL T14-053 (IA36)                                                PAGE  345

                                     CAL T14-053 IA36 02 + T1 + S1 UPPER MPS NOZZLE                 (SUFA08)

MACH  ( 1) =     1.197    BETA  ( 5) =     6.079

 SECTION ( 1)UPPER MPS NOZZLE                DEPENDENT VARIABLE DELCP

X/DE          .0580   .2320   .4060   .5800   .7540   .9280

  Z/DE
   .418               .1250
   .434       .8980
   .449                       .0000
   .482               .0000
   .502       .0000
```

```
DATE 05 NOV 75           TABULATED DATA FOR CAL T14-053 (IA36)                                          PAGE  346

                                      CAL T14-053 IA36 02 + T1 + S1 LOWER LH MPS NOZ.          (SUFB01)   ( 18 DEC 73  )

          REFERENCE DATA                                                                      PARAMETRIC DATA

SREF  =   49.4000 SQ.FT.   XMRP  =   158.0000 INCHES                                BETA  =     .000   POWER  =     .000
LREF  =   90.7000 INCHES   YMRP  =      .0000 INCHES                                GP1   =   11.000   GY1    =   -9.000
BREF  =   90.7000 INCHES   ZMRP  =      .0000 INCHES                                GP2   =     .000   GY2    =   -9.000
SCALE =     .0190 SCALE                                                             GP3   =     .000   GY3    =     .000

MACH  ( 1) =      .901    ALPHA ( 1) =    -8.088

 SECTION ( 1)LOWER LH MPS NOZ.             DEPENDENT VARIABLE DELCP

X/DE           .0580     .2320     .4060     .5800     .7540     .9280

  Z/DE
   -.502       .0000
   -.482                 .0000
   -.449                           .0000
   -.434       .0130
   -.418                -.0180
   -.397                                     .0000
   -.309                           .0030
   -.344                                    -.0150
   -.336                                               .0000
   -.291                                              -.0260
   -.266                                                         .0000
   -.251       .0220
   -.241                 .0160
   -.230                                                         .0300
   -.225                          -.0220
   -.198                                    -.0230
   -.168                                               .0130
   -.133                                                        -.0080
   -.000      -.0010    -.0070     .0050    -.0020
   -.000                -.0070     .0050    -.0020    -.0090     .0090
    .133                                                         .0060
    .168                                              -.0110
    .198                                     .0170
    .225                           .0390
    .230                                                        -.0260
    .241                -.0010
    .251      -.0050
    .266                                                         .0000
    .291                                               .0130
    .336                                               .0000
    .344                                     .0140
    .389                          -.0030
    .397                                     .0000
    .418                 .0090
    .434      -.0100
    .449                           .0000
    .482                 .0000
    .502       .0000
```

CAL T14-053 IA36 02 + T1 + S1 LOWER LH MPS NOZ. (SUFB01)

MACH (1) = .900 ALPHA (2) = -4.049

SECTION (1)LOWER LH MPS NOZ. DEPENDENT VARIABLE DELCP

X/DE	.0580	.2320	.4060	.5800	.7540	.9280
Z/DE						
-.502	.0000					
-.482		.0000				
-.449			.0000			
-.434	.0070					
-.418		.0030				
-.397				.0000		
-.389			.0020			
-.344				-.0270		
-.336					.0000	
-.291					-.0200	
-.266						.0000
-.251	.0090					
-.241		.0160				
-.230						.0260
-.225			-.0260			
-.198				-.0200		
-.168					-.0010	
-.133						-.0170
-.000	.0020	.0010	.0100	.0030		
-.000		.0010	.0100	.0030	-.0130	-.0040
.133						.0040
.168					-.0100	
.198				.0060		
.225			.0270			
.230						-.0210
.241		-.0110				
.251	-.0030					
.266						.0000
.291					.0240	
.336					.0000	
.344				0150		
.389			-.0110			
.397				.0000		
.418		-.0010				
.434	.0040					
.449			.0000			
.482		.0000				
.502	.0000					

CAL T14-053 IA36 02 + T1 + S1 LOWER LH MPS NOZ. (SUFB01)

MACH (1) = .900 ALPHA (3) = .013

SECTION (1)LOWER LH MPS NOZ. DEPENDENT VARIABLE DELCP

X/DE	.0580	.2320	.4060	.5800	.7540	.9280
Z/DE						
-.502	.0000					
-.482		.0000				
-.449			.0000			
-.434	.0250					
-.418		-.0130				
-.397				.0000		
-.389			.0000			
-.344				-.0210		
-.336					.0000	
-.291					-.0200	
-.266						.0000
-.251	.0230					
-.241		.0160				
-.230						.0300
-.225			-.0280			
-.198				-.0130		
-.168					.0210	
-.133						-.0050
-.000	.0080	.0100	.0020	.0000		
-.000		.0100	.0020	.0000	.0040	.0080
.133						.0120
.168					-.0060	
.198				.0160		
.225			.0320			
.230						-.0330
.241		-.0140				
.251	.0110					
.266						.0000
.291					.0300	
.336					.0000	
.344				.0230		
.389			-.0070			
.397				.0000		
.418		.0070				
.434	-.0040					
.449			.0000			
.482		.0000				
.502	.0000					

```
DATE 05 NOV 75              TABULATED DATA FOR CAL T14-053 (IA36)                                             PAGE  349

                                         CAL T14-053 IA36 O2 + T1 + S1 LOWER LH MPS NOZ.                (SUFB01)

MACH  ( 1) =      .899   ALPHA ( 4) =    4.005

 SECTION ( 1)LOWER LH MPS NOZ.                 DEPENDENT VARIABLE DELCP

X/DE       .0580    .2320    .4060    .5800    .7540    .9280

  Z/DE
  -.502    .0000
  -.482             .0000
  -.449                      .0000
  -.434    .0250
  -.418            -.0040
  -.397                               .0000
  -.389                      .0030
  -.344                              -.0300
  -.336                                        .0000
  -.291                                       -.0120
  -.266                                                 .0000
  -.251    .0350
  -.241             .0190
  -.230                                                 .0330
  -.225                     -.0440
  -.198                              -.0140
  -.168                                        .0060
  -.133                                                 .0040
  -.000    .0080   -.0030    .0000   -.0010
  -.000            -.0030    .0000   -.0010    .0080    .0040
   .133                                                 .0090
   .168                                       -.0090
   .198                               .0340
   .225                      .0370
   .230                                                -.0320
   .241            -.0100
   .251   -.0030
   .266                                                 .0000
   .291                                        .0340
   .336                                        .0000
   .344                               .0340
   .389                     -.0010
   .397                               .0000
   .418             .0010
   .434   -.0040
   .449                      .0000
   .482             .0000
   .502    .0000
```

```
                               CAL T14-053 IA36 O2 + T1 + S1 LOWER LH MPS NOZ.        (SUFB01)

MACH  ( 1) =     .899   ALPHA ( 5) =    6.006

 SECTION ( 1)LOWER LH MPS NOZ.               DEPENDENT VARIABLE DELCP

X/DE         .0580   .2320   .4060   .5800   .7540   .9280

  Z/DE
   -.502     .0000
   -.482             .0000
   -.449                     .0000
   -.434     .0110
   -.418            -.0240
   -.397                             .0000
   -.389                     .0260
   -.344                            -.0100
   -.336                                     .0000
   -.291                                    -.0150
   -.266                                             .0000
   -.251     .0200
   -.241             .0290
   -.230                                             .0420
   -.225                    -.0240
   -.198                             .0050
   -.168                                     .0310
   -.133                                            -.0160
   -.000     .0070   .0040   .0010   .0150
   -.000             .0040   .0010   .0150   .0070  -.0020
    .133                                             .0340
    .168                                    -.0200
    .198                             .0130
    .225                     .0570
    .230                                            -.0580
    .241            -.0110
    .251    -.0060
    .266                                             .0000
    .291                                     .0320
    .336                                     .0000
    .344                             .0220
    .339                    -.0240
    .397                             .0000
    .418             .0190
    .434     .0150
    .449                     .0000
    .482             .0000
    .502     .0000
```

```
DATE 05 NOV 75              TABULATED DATA FOR CAL T14-053 (IA36)                                          PAGE  35:

                                      CAL T14-053 IA36 02 + T1 + S1 LOWER LH MPS NOZ.              (SUFB02)   ( 18 DEC 73  )

              REFERENCE DATA                                                                          PARAMETRIC DATA

SREF  =     49.4000 SQ.FT.   XMRP  =   158.0000 INCHES                           ALPHA   =      .000   POWER   =      .000
LREF  =     90.7000 INCHES   YMRP  =      .0000 INCHES                           GP1     =    11.000   GY1     =    -9.000
BREF  =     90.7000 INCHES   ZMRP  =      .0000 INCHES                           GP2     =      .000   GY2     =    -9.000
SCALE =       .0190 SCALE                                                        GP3     =      .000   GY3     =      .000

MACH  ( 1) =      .901    BETA  ( 1) =   -6.079

 SECTION ( 1)LOWER LH MPS NOZ.               DEPENDENT VARIABLE DELCP

X/DE         .0580   .2320   .4060   .5800   .7540   .9280

  Z/DE
   -.502     .0000
   -.482             .0000
   -.449                     .0000
   -.434     .0110
   -.418            -.0110
   -.397                             .0000
   -.389                     .0160
   -.344                            -.0310
   -.336                                     .0000
   -.291                                    -.0260
   -.266                                             .0000
   -.251     .0240
   -.241             .0210
   -.230                                             .0220
   -.225                    -.0360
   -.198                            -.0030
   -.168                                     .0080
   -.133                                            -.0080
   -.000     .0010  -.0070  -.0040  -.0060
   -.000            -.0070  -.0040  -.0060   .0100   .0070
    .133                                             .0220
    .168                                    -.0050
    .198                             .0140
    .225                     .0260
    .230                                            -.0170
    .241            -.0260
    .251    -.0290
    .266                                             .0000
    .291                                     .0080
    .336                                     .0000
    .344                             .0330
    .389                    -.0110
    .397                             .0000
    .418            -.0010
    .434    -.0040
    .449                     .0000
    .482             .0000
    .502     .0000
```

```
                         CAL T14-053 IA36 O2 + T1 + S1 LOWER LH MPS NOZ.          (SUFB02)

MACH  ( 1) =     .900    BETA  ( 2) =    -3.049

 SECTION ( 1)LOWER LH MPS NOZ.              DEPENDENT VARIABLE DELCP

X/DE        .0580    .2320    .4060    .5800    .7540    .9280

  Z/DE
   -.502    .0000
   -.482             .0000
   -.449                      .0000
   -.434    .0100
   -.418            -.0140
   -.397                               .0000
   -.389                     -.0040
   -.344                              -.0200
   -.336                                        .0000
   -.291                                       -.0150
   -.266                                                 .0000
   -.251    .0110
   -.241             .0070
   -.230                                                 .0240
   -.225                     -.0270
   -.198                              -.0130
   -.168                                        .0100
   -.133                                                -.0100
   -.000   -.0040   -.0060   -.0050    .0060
   -.000            -.0060   -.0050    .0060    .0060    .0160
    .133                                                 .0170
    .168                                       -.0100
    .198                               .0180
    .225                      .0410
    .230                                                -.0260
    .241             .0000
    .251   -.0080
    .266                                                 .0000
    .291                                        .0220
    .336                                        .0000
    .344                               .0140
    .389                      .0060
    .397                               .0000
    .418             .0180
    .434   -.0030
    .449                      .0000
    .482             .0000
    .502    .0000
```

```
DATE 05 NOV 75            TABULATED DATA FOR CAL T14-053 (IA36)                                                  PAGE  353

                                   CAL T14-053 IA36 O2 + T1 + S1 LOWER LH MPS NOZ.                (SUFB02)

MACH  ( 1) =      .901    BETA  ( 3) =      .000

 SECTION ( 1)LOWER LH MPS NOZ.                 DEPENDENT VARIABLE DELCP

X/DE          .0580   .2320   .4060   .5800   .7540   .9280

  Z/DE
   -.502      .0000
   -.482              .0000
   -.449                      .0000
   -.434      .0220
   -.418              .0050
   -.397                              .0000
   -.389                      .0000
   -.344                             -.0220
   -.336                                      .0000
   -.291                                     -.0140
   -.266                                              .0000
   -.251      .0300
   -.241              .0150
   -.230                                              .0300
   -.225                     -.0310
   -.198                             -.0110
   -.168                                      .0060
   -.133                                              .0000
   -.000      .0070  -.0030   .0010  -.0070
   -.000             -.0030   .0010  -.0070  -.0010   .0100
    .133                                              .0050
    .168                                     -.0060
    .198                              .0190
    .225                      .0390
    .230                                             -.0330
    .241             -.0040
    .251     -.0050
    .266                                              .0000
    .291                                      .0170
    .336                                      .0000
    .344                              .0270
    .389                      .0050
    .397                              .0000
    .418              .0080
    .434     -.0050
    .449                      .0000
    .482              .0000
    .502      .0000
```

```
                                   CAL T14-053 IA36 O2 + T1 + S1 LOWER LH MPS NOZ.          (SUFB02)

MACH  ( 1) =     .900    BETA  ( 4) =    3.051

 SECTION ( 1)LOWER LH MPS NOZ.              DEPENDENT VARIABLE DELCP

X/DE         .0580     .2320     .4060     .5800     .7540     .9280

  Z/DE
   -.502     .0000
   -.482               .0000
   -.449                         .0000
   -.434     .0160
   -.418              -.0160
   -.397                                   .0000
   -.389                         .0070
   -.344                                  -.0190
   -.336                                             .0000
   -.291                                            -.0090
   -.266                                                       .0000
   -.251     .0160
   -.241               .0130
   -.230                                                       .0310
   -.225                        -.0290
   -.198                                  -.0070
   -.168                                             .0150
   -.133                                                      -.0050
   -.000     .0180    -.0070    -.0020     .0040
   -.000              -.0070    -.0020     .0040     .0040    -.0040
    .133                                                       .0140
    .168                                            -.0100
    .198                                   .0150
    .225                         .0320
    .230                                                      -.0250
    .241              -.0020
    .251     .0020
    .266                                                       .0000
    .291                                             .0220
    .336                                             .0000
    .344                                   .0180
    .389                        -.0050
    .397                                   .0000
    .418               .0130
    .434     .0050
    .449                         .0000
    .482               .0000
    .502     .0000
```

```
DATE 05 NOV 75            TABULATED DATA FOR CAL T14-053 (IA36)                                              PAGE  355

                                         CAL T14-053 IA36 O2 + T1 + S1 LOWER LH MPS NOZ.            (SUFB02)

MACH  ( 1) =     .901   BETA  ( 5) =    6.089

 SECTION ( 1)LOWER LH MPS NOZ.               DEPENDENT VARIABLE DELCP

X/DE            .0580    .2320    .4060    .5800    .7540    .9280

  Z/DE
   -.502        .0000
   -.482                 .0000
   -.449                          .0000
   -.434        .0000
   -.418                -.0120
   -.397                                   .0000
   -.389                         -.0030
   -.344                                  -.0280
   -.336                                            .0000
   -.291                                           -.0030
   -.266                                                     .0000
   -.251        .0340
   -.241                 .0100
   -.230                                                     .0330
   -.225                         -.0200
   -.198                                  -.0010
   -.168                                            .0110
   -.133                                                    -.0100
   -.000        .0230    .0060    .0110    .0040
   -.000                 .0060    .0110    .0040   -.0060   -.0040
    .133                                                     .0190
    .168                                            .0030
    .198                                  -.0010
    .225                          .0240
    .230                                                    -.0120
    .241                 .0080
    .251        .0040
    .256                                                     .0000
    .291                                            .0080
    .336                                            .0000
    .344                                   .0270
    .389                         -.0230
    .397                                   .0000
    .418                 .0060
    .434        .0090
    .449                          .0000
    .482                 .0000
    .502        .0000
```

```
DATE 05 NOV 75            TABULATED DATA FOR CAL T14-053 (IA36)                                                  PAGE  356

                                   CAL T14-053 IA36 02 + T1 + S1 LOWER LH MPS NOZ.             (SUFB03)    ( 18 DEC 73  )

             REFERENCE DATA                                                                    PARAMETRIC DATA

SREF  =    49.4000 SQ.FT.   XMRP  =   158.0000 INCHES                              BETA   =      .000  POWER  =     1.000
LREF  =    90.7000 INCHES   YMRP  =      .0000 INCHES                              OPR    =    36.200  SRMPR  =     2.330
BREF  =    90.7000 INCHES   ZMRP  =      .0000 INCHES                              GP1    =    11.000  GY1    =    -9.000
SCALE =      .0190 SCALE                                                           GP2    =      .000  GY2    =    -9.000
                                                                                   GP3    =      .000  GY3    =    -9.000

MACH  ( 1) =      .897    ALPHA ( 1) =    -8.088

 SECTION ( 1)LOWER LH MPS NOZ.               DEPENDENT VARIABLE DELCP

X/DE        .0580   .2320   .4060   .5800   .7540   .9280

 Z/DE
  -.502     .0000
  -.482             .0000
  -.449                     .0000
  -.434     .0540
  -.418            -.0520
  -.397                             .0000
  -.389                    -.0040
  -.344                            -.0090
  -.336                                     .0000
  -.291                                    -.0060
  -.266                                             .0000
  -.251     .0330
  -.241             .0100
  -.230                                             .0670
  -.225                    -.0590
  -.198                            -.0270
  -.168                                     .0560
  -.133                                             .0200
  -.000    -.0120   .0070  -.0060  -.0020
  -.000             .0070  -.0060  -.0020   .0030   .0010
   .133                                            -.0120
   .168                                    -.0550
   .198                             .0290
   .225                     .0690
   .230                                            -.0620
   .241            -.0110
   .251    -.0080
   .266                                             .0000
   .291                                    -.0010
   .336                                     .0000
   .344                             .0150
   .389                     .0140
   .397                             .0000
   .418             .0430
   .434    -.0150
   .449                      0000
   .482             .0000
```

```
                                     CAL T14-053 IA36 02 + 11 + S1 LOWER LH MPS NOZ.                (SUFB03)

MACH  ( 1) =      .897    ALPHA ( 1) =   -8.088

 SECTION ( 1)LOWER LH MPS NOZ.               DEPENDENT VARIABLE DELCP

X/DE          .0580   .2320   .4060   .5800   .7540   .9280

  Z/DE
    .502    .0000

MACH  ( 1) =      .899    ALPHA ( 2) =   -4.038

 SECTION ( 1)LOWER LH MPS NOZ.               DEPENDENT VARIABLE DELCP

X/DE          .0580   .2320   .4060   .5600   .7540   .9280

  Z/DE
   -.502    .0000
   -.492            .0000
   -.449                    .0000
   -.434    .0390
   -.418            .0310
   -.397                            .0000
   -.389                   -.0150
   -.344                           -.0160
   -.336                                    .0000
   -.291                                    .0010
   -.266                                            .0000
   -.251    .0410
   -.241            .0070
   -.230                                            .0160
   -.225                    .0020
   -.198                           -.0140
   -.168                                    .0040
   -.133                                            .0200
   -.000   -.0150   .0120   .0050   .0140
   -.000            .0120   .0050   .0140   .0070   .0080
    .133                                           -.0230
    .168                                    .0140
    .198                            .0150
    .225                    .0050
    .230                                           -.0060
    .241           -.0030
    .251   -.0190
    .266                                            .0000
    .291                                    .0060
    .336                                    .0000
    .344                            .0240
    .389                    .0120
    .397                            .0000
    .418           -.0190
    .434   -.0190
    .449                    .0000
```

```
                                CAL T14-053 IA36 02 + T1 + S1 LOWER LH MPS NOZ.                 (SUFB03)

MACH  ( 1) =     .899    ALPHA ( 2) =    -4.038

 SECTION ( 1)LOWER LH MPS NOZ.                 DEPENDENT VARIABLE DELCP

X/DE         .0580   .2320   .4060   .5800   .7540   .9280

  Z/DE
    .482             .0000
    .502     .0000

MACH  ( 1) =     .901    ALPHA ( 3) =      .001

 SECTION ( 1)LOWER LH MPS NOZ.                 DEPENDENT VARIABLE DELCP

X/DE         .0580   .2320   .4060   .5800   .7540   .9280

  Z/DE
   -.502     .0000
   -.482             .0000
   -.449                     .0000
   -.434     .0400
   -.418             .0300
   -.397                             .0000
   -.389                    -.0120
   -.344                            -.0080
   -.336                                     .0000
   -.291                                    -.0100
   -.266                                             .0000
   -.251     .0200
   -.241             .0220
   -.230                                             .0090
   -.225                     .0120
   -.198                            -.0210
   -.168                                     .0000
   -.133                                             .0120
   -.000    -.0040  -.0030   .0040   .0040
   -.000            -.0030   .0040   .0040   .0050   .0080
    .133                                            -.0120
    .168                                     .0100
    .198                             .0220
    .225                     .0000
    .230                                            -.0020
    .241            -.0040
    .251    -.0060
    .266                                             .0000
    .291                                    -.0040
    .336                                     .0000
    .344                             .0090
    .389                     .0090
    .397                             .0000
    .418            -.0190
    .434    -.0140
```

```
                                 CAL T14-C53 IA36 O2 + T1 + S1 LOWER LH MPS NOZ.             (SUFB03)

MACH  ( 1) =     .901    ALPHA ( 3) =     .001

 SECTION ( 1)LOWER LH MPS NOZ.             DEPENDENT VARIABLE DELCP

X/DE         .0580   .2320   .4060   .5800   .7540   .9280

  Z/DE
    .449                     .0000
    .482             .0000
    .502     .0000

MACH  ( 1) =     .902    ALPHA ( 4) =    4.026

 SECTION ( 1)LOWER LH MPS NOZ.             DEPENDENT VARIABLE DELCP

X/DE         .0580   .2320   .4060   .5800   .7540   .9280

  Z/DE
  -.502      .0000
  -.482              .0000
  -.449                      .0000
  -.434      .0370
  -.418              .0330
  -.397                              .0000
  -.389                    -.0100
  -.344                            -.0210
  -.336                                      .0000
  -.291                                    -.0070
  -.266                                              .0000
  -.251      .0410
  -.241              .0140
  -.230                                              .0100
  -.225                    -.0010
  -.198                            -.0200
  -.168                                    -.0210
  -.133                                              .0170
  -.000      .0030 -.0060  -.0050   .0100
  -.000            -.0060  -.0050   .0100   .0110   .0020
   .133                                            -.0020
   .168                                      .0220
   .198                              .0300
   .225                    -.0050
   .230                                            -.0050
   .241            -.0150
   .251    -.0170
   .266                                              .0000
   .291                                      .0100
   .336                                      .0000
   .344                              .0180
   .389                      .0020
   .337                              .0000
   .418            -.0260
```

```
                    CAL T14-053 IA36 O2 + T1 + S1 LOWER LH MPS NOZ.              (SUFB03)

MACH  ( 1) =     .902    ALPHA ( 4) =    4.026

 SECTION ( 1)LOWER LH MPS NOZ.            DEPENDENT VARIABLE DELCP

X/DE       .0580     .2320     .4060     .5800     .7540     .9280

  Z/DE
    .434  -.0160
    .449                       .0000
    .482             .0000
    .502   .0000

MACH  ( 1) =     .898    ALPHA ( 5) =    6.021

 SECTION ( 1)LOWER LH MPS NOZ.            DEPENDENT VARIABLE DELCP

X/DE       .0580     .2320     .4060     .5800     .7540     .9280

  Z/DE
   -.502   .0000
   -.482             .0000
   -.449                       .0000
   -.434   .0290
   -.418            -.0300
   -.397                                 .0000
   -.389                      -.0040
   -.344                                 .0020
   -.336                                           .0000
   -.291                                          -.0040
   -.266                                                     .0000
   -.251  -.0010
   -.241             .0060
   -.230                                                     .0350
   -.225                      -.0380
   -.198                                -.0200
   -.168                                           .0440
   -.133                                                     .0110
   -.000   .0030    -.0100     .0040     .0030
   -.000            -.0100     .0040     .0030     .0040     .0000
    .133                                                    -.0070
    .168                                          -.0420
    .198                                 .0170
    .225                       .0290
    .230                                                    -.0370
    .241            -.0110
    .251   .0180
    .266                                                     .0000
    .291                                           .0150
    .336                                           .0000
    .344                                -.0150
    .389                       .0030
    .397                                 .0000
```

```
DATE 05 NOV 75           TABULATED DATA FOR CAL T14-053 (IA36)                                                         PAGE  361

                                                    CAL T14-053 IA36 02 + T1 + S1 LOWER LH MPS NOZ.                 (SUFB03)

MACH  ( 1) =     .898    ALPHA ( 5) =    6.021

 SECTION ( 1)LOWER LH MPS NOZ.             DEPENDENT VARIABLE DELCP

X/DE        .0580   .2320   .4060   .5800   .7540   .9280

  Z/DE
    .418            .0330
    .434   -.0080
    .449                    .0000
    .482            .0000
    .502    .0000
```

```
                                         CAL T14-053 IA36 02 + T1 + S1 LOWER LH MPS NOZ.            (SUFB04)   ( 18 DEC 73  )

               REFERENCE DATA                                                                                PARAMETRIC DATA

SREF  =      49.4000 SQ.FT.    XMRP  =   158.0000 INCHES                           ALPHA   =       .000   POWER   =      1.000
LREF  =      90.7000 INCHES    YMRP  =      .0000 INCHES                           OPR     -     36.200   SRMPR   =      2.330
BREF  =      90.7000 INCHES    ZMRP  =      .0000 INCHES                           GP1     =     11.000   GY1     =     -9.000
SCALE =        .0190 SCALE                                                         GP2     =       .000   GY2     =     -9.000
                                                                                   GP3     =       .000   GY3     =     -9.000

MACH  ( 1) =      .899    BETA  ( 1) =    -6.078

 SECTION ( 1)LOWER LH MPS NOZ.                DEPENDENT VARIABLE DELCP

X/OE        .0580     .2320     .4060     .5800     .7540     .9280

  Z/OE
  -.502     .0000
  -.482               .0000
  -.449                         .0000
  -.434     .0390
  -.418              -.0010
  -.397                                   .0000
  -.389                        -.0160
  -.344                                  -.0270
  -.336                                             .0000
  -.291                                            -.0160
  -.266                                                       .0000
  -.251     .0070
  -.241               .0110
  -.230                                                       .0250
  -.225                        -.0260
  -.198                                  -.0300
  -.168                                             .0070
  -.133                                                       .0100
  -.000     .0430     .0150     .0090     .0010
  -.000               .0150     .0090     .0010    -.0090    -.0020
   .133                                                      -.0070
   .168                                             .0030
   .198                                   .0160
   .225                         .0060
   .230                                                      -.0240
   .241              -.0150
   .251    -.0050
   .266                                                       .0000
   .291                                             .0170
   .336                                             .0000
   .344                                   .0370
   .389                         .0040
   .397                                   .0000
   .418              -.0110
   .434    -.0170
   .449                         .0000
   .482               .0000
```

```
                                      CAL T14-053 IA36 O2 + T1 + S1 LOWER LH MPS NOZ.                 (SUFB04)

MACH  ( 1) =     .099    BETA  ( 1) =   -6.078

 SECTION ( 1)LOWER LH MPS NOZ.                DEPENDENT VARIABLE DELCP

X/DE           .0580   .2320   .4060   .5800   .7540   .9280

  Z/DE
   .502      .0000

MACH  ( 1) =     .900    BETA  ( 2) =   -3.049

 SECTION ( 1)LOWER LH MPS NOZ.                DEPENDENT VARIABLE DELCP

X/DE           .0580   .2320   .4060   .5800   .7540   .9280

  Z/DE
   -.502       .0000
   -.482               .0000
   -.449                       .0000
   -.434       .0320
   -.418              -.0010
   -.397                               .0000
   -.389                      -.0220
   -.344                              -.0210
   -.336                                       .0000
   -.291                                      -.0020
   -.266                                               .0000
   -.251       .0210
   -.241              -.0110
   -.230                                               .0320
   -.225                      -.0260
   -.198                              -.0240
   -.168                                       .0080
   -.133                                               .0140
   -.000       .0190  -.0030  -.0080  -.0030
   -.000              -.0030  -.0080  -.0030  -.0020   .0040
    .133                                              -.0090
    .158                                      -.0090
    .198                               .0040
    .225                       .0110
    .230                                              -.0290
    .241              -.0110
    .251      -.0030
    .266                                               .0000
    .291                                       .0030
    .336                                       .0000
    .344                               .0150
    .389                       .0100
    .397                               .0000
    .418               .0030
    .434      -.0030
    .449                       .0000
```

REPRODUC
ORIGINAL

```
                         CAL T14-053 IA36 02 + T1 + S1 LOWER LH MPS NOZ.           (SUFB04)

MACH  ( 1) =     .900   BETA  ( 2) =   -3.049

 SECTION ( 1)LOWER LH MPS NOZ.                 DEPENDENT VARIABLE DELCP

X/DE         .0580   .2320   .4060   .5800   .7540   .9280

  Z/DE
   .482              .0000
   .502      .0000

MACH  ( 1) =     .899   BETA  ( 3) =     .000

 SECTION ( 1)LOWER LH MPS NOZ.                 DEPENDENT VARIABLE DELCP

X/DE         .0580   .2320   .4060   .5800   .7540   .9280

  Z/DE
  -.502      .0000
  -.482              .0000
  -.449                      .0000
  -.434      .0330
  -.418              .0030
  -.397                              .0000
  -.389                     -.0100
  -.344                             -.0220
  -.336                                      .0000
  -.291                                     -.0070
  -.266                                              .0000
  -.251      .0190
  -.241              .0130
  -.230                                              .0320
  -.225                     -.0150
  -.198                             -.0250
  -.168                                      .0080
  -.133                                              .0160
  -.000      .0000  -.0090  -.0050   .0090
  -.000             -.0090  -.0050   .0090  -.0020   .0030
   .133                                             -.0170
   .168                                     -.0050
   .198                              .0200
   .225                      .0130
   .230                                             -.0300
   .241             -.0170
   .251     -.0330
   .266                                              .0000
   .291                                      .0070
   .336                                      .0000
   .344                              .0090
   .389                      .0060
   .397                              .0000
   .418              .0090
   .434     -.0110
```

```
                                 CAL T14-053 IA36 02 + T1 + S1 LOWER LH MPS NOZ.                 (SUFB04)

MACH  ( 1) =     .899    BETA  ( 3) =      .000

 SECTION ( 1)LOWER LH MPS NOZ.               DEPENDENT VARIABLE DELCP

X/DE        .0580     .2320     .4060     .5800     .7540     .3280

  Z/DE
    .449                        .0000
    .482              .0000
    .502    .0000

MACH  ( 1) =     .898    BETA  ( 4) =     3.051

 SECTION ( 1)LOWER LH MPS NOZ.               DEPENDENT VARIABLE DELCP

X/DE        .0580     .2320     .4060     .5800     .7540     .9280

  Z/DE
   -.502    .0000
   -.482              .0000
   -.449                        .0000
   -.434    .0360
   -.418             -.0020
   -.397                                  .0000
   -.389                       -.0250
   -.344                                 -.0320
   -.336                                            .0000
   -.291                                            .0060
   -.266                                                      .0000
   -.251    .0350
   -.241             -.0120
   -.230                                                      .0300
   -.225                       -.0370
   -.198                                 -.0150
   -.168                                           -.0130
   -.133                                                      .0230
   -.000   -.0190    -.0100    -.0070    -.0020
   -.000             -.0100    -.0070    -.0020     .0020     .0020
    .133                                                     -.0180
    .168                                            .0140
    .198                                  .0170
    .225                        .0270
    .230                                                     -.0270
    .241             -.0070
    .251   -.0560
    .266                                                      .0000
    .291                                           -.0030
    .336                                            .0000
    .344                                  .0390
    .389                        .0180
    .397                                  .0000
    .418             -.0190
```

```
                        CAL T14-053 IA36 02 + T1 + S1 LOWER LH MPS NOZ.              (SUFB04)

MACH  ( 1) =     .898    BETA  ( 4) =    3.051

 SECTION ( 1)LOWER LH MPS NOZ.             DEPENDENT VARIABLE DELCP

X/DE        .0580   .2320   .4060   .5800   .7540   .9280

  Z/DE
    .434  -.0260
    .449                    .0000
    .482            .0000
    .502   .0000

MACH  ( 1) =     .899    BETA  ( 5) =    6.088

 SECTION ( 1)LOWER LH MPS NOZ.             DEPENDENT VARIABLE DELCP

X/DE        .0580   .2320   .4060   .5800   .7540   .9280

  Z/DE
   -.502   .0000
   -.482           .0000
   -.449                   .0000
   -.434   .0440
   -.418           .0090
   -.397                           .0000
   -.389                  -.0260
   -.344                          -.0310
   -.336                                   .0000
   -.291                                   .0030
   -.256                                           .0000
   -.251   .0270
   -.241          -.0120
   -.230                                           .0190
   -.225                  -.0270
   -.198                          -.0220
   -.168                                  -.0170
   -.133                                           .0250
   -.000  -.0380  -.0310  -.0220  -.0090
   -.000          -.0310  -.0220  -.0090   .0020  -.0050
    .133                                          -.0210
    .168                                   .0070
    .198                           .0080
    .225                   .0030
    .230                                          -.0190
    .241           .0040
    .251  -.0300
    .266                                           .0000
    .291                                  -.0150
    .336                                   .0000
    .344                           .0100
    .389                   .0140
    .397                           .0000
```

```
DATE 05 NOV 75             TABULATED DATA FOR CAL T14-053 (IA36)                                    PAGE  367

                                      CAL T14-053 IA36 O2 + T1 + S1 LOWER LH MPS NOZ.            (SUFB04)

MACH  ( 1) =      .899    BETA  ( 5) =     6.088

 SECTION ( 1)LOWER LH MPS NOZ.              DEPENDENT VARIABLE DELCP

X/DE         .0580   .2320   .4060   .5800   .7540   .9280

  Z/DE
    .418            -.0320
    .434   -.0280
    .449                     .0000
    .482             .0000
    .502     .0000
```

```
                                        CAL T14-053 IA36 O2 + T1 + S1 LOWER LH MPS NOZ.              (SUFB05)    ( 18 DEC 73  )

                REFERENCE DATA                                                                        PARAMETRIC DATA

SREF   =     49.4000 SQ.FT.    XMRP   =    158.0000 INCHES                                  BETA    =       .000   POWER   =       .000
LREF   =     90.7000 INCHES    YMRP   =       .0000 INCHES                                  GP1     =     11.000   GY1     =     -9.000
BREF   =     90.7000 INCHES    ZMRP   =       .0000 INCHES                                  GP2     =       .000   GY2     =     -9.000
SCALE  =       .0190 SCALE                                                                  GP3     =       .000   GY3     =       .000

MACH   ( 1) =     1.203     ALPHA ( 1) =    -8.101

 SECTION ( 1)LOWER LH MPS NOZ.               DEPENDENT VARIABLE DFLCP

X/DE           .0580    .2320    .4060    .5800    .7540    .9280

  Z/DE
   -.502       .0000
   -.482                .0000
   -.447                         .0000
   -.434       .0170
   -.418               -.0140
   -.397                                  .0000
   -.389                         .0100
   -.344                                  .0010
   -.335                                           .0000
   -.291                                          -.0190
   -.266                                                    .0000
   -.251      -.0040
   -.241                .0090
   -.230                                                    .0060
   -.225                        -.0170
   -.198                                 -.0110
   -.168                                           .0260
   -.133                                                   -.0020
   -.000      -.0020   -.0260   -.0100    .0120
   -.000               -.0260   -.0100    .0120    .0080    .0120
    .133                                                    .0250
    .168                                          -.0040
    .198                                  .0160
    .225                         .0100
    .230                                                    .0020
    .241               -.0340
    .251       .0190
    .266                                                    .0000
    .291                                           .0240
    .336                                           .0000
    .344                                 -.0010
    .389                        -.0090
    .397                                  .0000
    .418                .0200
    .434       .0040
    .449                         .0000
    .482                .0000
    .502       .0000
```

```
DATE 05 NOV 75            TABULATED DATA FOR CAL T14-053 (IA36)                                         PAGE  369

                                   CAL T14-053 IA36 02 + T1 + S1 LOWER LH MPS NOZ.               (SUFB05)

MACH  ( 1) =    1.202    ALPHA ( 2) =   -4.038

 SECTION ( 1)LOWER LH MPS NOZ.                DEPENDENT VARIABLE DELCP

X/DE         .0580   .2320   .4060   .5800   .7540   .9280

  Z/DE
   -.502     .0000
   -.482             .0000
   -.449                     .0000
   -.434     .0210
   -.418            -.0210
   -.397                             .0000
   -.389                     .0040
   -.344                             .0060
   -.335                                     .0000
   -.291                                    -.0160
   -.266                                             .0000
   -.251     .0010
   -.241             .0010
   -.230                                             .0380
   -.225                    -.0220
   -.198                            -.0140
   -.168                                     .0410
   -.133                                             .0040
   -.000     .0090  -.0170  -.0130   .0200
   -.000            -.0170  -.0130   .0200   .0160   .0150
    .133                                             .0280
    .168                                    -.0150
    .198                             .0150
    .225                     .0280
    .230                                            -.0050
    .241            -.0260
    .251     .0250
    .266                                             .0000
    .291                                     .0180
    .336                                     .0000
    .344                            -.0010
    .389                    -.0100
    .397                             .0000
    .418             .0230
    .434     .0050
    .449                     .0000
    .482             .0000
    .502     .0000
```

DATE 05 NOV 75 TABULATED DATA FOR CAL T14-053 (IA36)

CAL T14-053 IA36 02 + T1 + S1 LOWER LH MPS NOZ. (SUFB05)

MACH (1) = 1.203 ALPHA (3) = -.011

SECTION (1)LOWER LH MPS NOZ. DEPENDENT VARIABLE DELCP

X/DE	.0580	.2320	.4060	.5800	.7540	.9280
Z/DE						
-.502	.0000					
-.482		.0000				
-.449			.0000			
-.434	.0190					
-.418		-.0270				
-.397				.0000		
-.389			.0130			
-.344				.0010		
-.336					.0000	
-.291					-.0190	
-.266						.0000
-.251	.0090					
-.241		.0040				
-.230						.0200
-.225			-.0240			
-.198				-.0070		
-.168					.0430	
-.133						.0030
-.000	.0090	-.0160	-.0130	.0120		
-.000		-.0160	-.0130	.0120	.0160	.0110
.133						.0280
.168					-.0190	
.198				.0120		
.225			.0310			
.230						-.0150
.241		-.0230				
.251	.0230					
.266						.0000
.291					.0160	
.336					.0000	
.344				-.0050		
.389			-.0160			
.397				.0000		
.418		.0260				
.434	.0100					
.449			.0000			
.482		.0000				
.502	.0000					

```
DATE 05 NOV 75           TABULATED DATA FOR CAL T14-053 (IA36)                                        PAGE  371

                              CAL T14-053 IA36 02 + TI + S1 LOWER LH MPS NOZ.                (SUFB05)

MACH  ( 1) =    1.203    ALPHA ( 4) =    4.003

 SECTION ( 1)LOWER LH MPS NOZ.             DEPENDENT VARIABLE DELCP

X/DE        .0580    .2320    .4060    .5800    .7540    .9280

  Z/DE
   -.502    .0000
   -.482             .0000
   -.449                      .0000
   -.434    .0190
   -.418            -.0220
   -.397                               .0000
   -.389                      .0110
   -.344                               .0120
   -.336                                        .0000
   -.291                                       -.0180
   -.266                                                 .0000
   -.251    .0040
   -.241             .0150
   -.230                                                 .0120
   -.225                     -.0130
   -.198                              -.0060
   -.168                                        .0470
   -.133                                                 .0090
   -.000    .0200   -.0110   -.0070    .0180
   -.000            -.0110   -.0070    .0180    .0220    .0170
    .133                                                 .0250
    .168                                       -.0100
    .198                               .0140
    .225                      .0200
    .230                                                -.0050
    .241            -.0230
    .251    .0270
    .265                                                 .0000
    .291                                        .0220
    .336                                        .0000
    .344                              -.0150
    .389                     -.0100
    .397                               .0000
    .418             .0340
    .434    .0060
    .449                      .0000
    .482             .0000
    .502    .0000
```

```
DATE 05 NOV 75             TABULATED DATA FOR CAL T14-053 (IA36)                                                  PAGE  372
                                        CAL T14-053 IA36 O2 + T1 + S1 LOWER LH MPS NOZ.               (SUFB05)
MACH  ( 1) =    1.202   ALPHA ( 5) =    6.016
 SECTION ( 1)LOWER LH MPS NOZ.            DEPENDENT VARIABLE DELCP
X/DE        .0580   .2320   .4060   .5800   .7540   .9280

  Z/DE
   -.502    .0000
   -.482            .0000
   -.449                    .0000
   -.434    .0280
   -.418           -.0350
   -.397                            .0000
   -.389                    .0060
   -.344                            .0070
   -.336                                    .0000
   -.291                                   -.0160
   -.266                                            .0000
   -.251    .0030
   -.241            .0140
   -.230                                            .0290
   -.225                   -.0270
   -.198                           -.0160
   -.168                                    .0490
   -.133                                            .0140
   -.000    .0200  -.0150  -.0070   .0130
   -.000           -.0150  -.0070   .0130   .0200   .0160
    .133                                            .0190
    .168                                   -.0210
    .198                            .0250
    .225                    .0360
    .230                                           -.0120
    .241           -.0240
    .251    .0370
    .266                                            .0000
    .291                                    .0190
    .336                                    .0000
    .344                           -.0090
    .389                   -.0030
    .397                            .0000
    .418            .0360
    .434    .0070
    .449                    .0000
    .482            .0000
    .502    .0000
```

```
                                          CAL T14-053 IA36 02 + T1 + S1 LOWER LH MPS NOZ.                 (SUFB06)    ( 18 DEC 73  )

               REFERENCE DATA                                                                              PARAMETRIC DATA

SREF   =    49.4000 SQ.FT.    XMRP   =    158.0000 INCHES                           ALPHA   =      .000   POWER   =      .000
LREF   =    90.7000 INCHES    YMRP   =       .0000 INCHES                           GP1     =    11.000   GY1     =    -9.000
BREF   =    90.7000 INCHES    ZMRP   =       .0000 INCHES                           GP2     =      .000   GY2     =    -9.000
SCALE  =      .0190 SCALE                                                           GP3     =      .000   GY3     =      .000

MACH   ( 1) =     1.202     BETA   ( 1) =    -6.079

 SECTION ( 1)LOWER LH MPS NOZ.               DEPENDENT VARIABLE DELCP

X/DE         .0580    .2320    .4060    .5800    .7540    .9280

  Z/DE
   -.502     .0000
   -.492              .0000
   -.449                       .0000
   -.434     .0130
   -.418             -.0160
   -.397                                .0000
   -.389                       .0090
   -.344                                .0000
   -.336                                         .0000
   -.291                                        -.0170
   -.266                                                  .0000
   -.251     .0070
   -.241              .0060
   -.230                                                  .0220
   -.225                      -.0140
   -.198                               -.0060
   -.166                                         .0330
   -.133                                                  .0000
   -.000     .0080   -.0060   -.0110    .0160
   -.000             -.0060   -.0110    .0160    .0140    .0200
    .133                                                  .0220
    .168                                        -.0040
    .198                                .0100
    .225                       .0210
    .230                                                 -.0030
    .241             -.0240
    .251     .0050
    .266                                                  .0000
    .291                                         .0180
    .336                                         .0000
    .344                                .0050
    .389                      -.0090
    .397                                .0000
    .418              .0260
    .434     .0080
    .449                       .0000
    .482              .0000
    .502     .0000
```

```
DATE 05 NOV 75              TABULATED DATA FOR CAL T14-053 (IA36)                                                   PAGE  374
                                          CAL T14-053 IATG 02 + T1 + S1 LOWER LH MPS NOZ.                (SUFB06)
MACH  ( 1) =    1.202    BETA  ( 2) =    -3.051
 SECTION ( 1)LOWER LH MPS NOZ.                DEPENDENT VARIABLE DELCP

X/DE         .0580     .2320     .4060     .5800     .7540     .9280

  Z/DE
     -.502   .0000
     -.482             .0000
     -.449                       .0000
     -.434   .0110
     -.418            -.0210
     -.397                                 .0000
     -.389                       .0160
     -.344                                -.0020
     -.336                                           .0000
     -.291                                          -.0140
     -.266                                                     .0000
     -.251   .0140
     -.241            -.0070
     -.230                                                     .0260
     -.225                      -.0250
     -.198                                 .0030
     -.168                                           .0340
     -.133                                                    -.0020
     -.000   .0070    -.0170    -.0150     .0130
     -.000            -.0170    -.0150     .0130     .0180     .0160
      .133                                                     .0250
      .168                                          -.0070
      .198                                 .0040
      .225                       .0170
      .230                                                    -.0070
      .241            -.0260
      .251   .0140
      .266                                                     .0000
      .291                                           .0010
      .336                                           .0000
      .344                                -.0030
      .389                      -.0100
      .397                                 .0000
      .418             .0190
      .434   .0120
      .449                       .0000
      .482             .0000
      .502   .0000
```

```
DATE 05 NOV 75            TABULATED DATA FOR CAL T14-053 (IA36)

                                 CAL T14-053 IA36 O2 + T1 + S1 LOWER LH MPS NOZ.            (SUFB06)

MACH  ( 1) =    1.202    BETA  ( 3) =     .000

 SECTION ( 1)LOWER LH MPS NOZ.                DEPENDENT VARIABLE DELCP

X/DE          .0580   .2320   .4060   .5800   .7540   .9280

  Z/DE
   -.502     .0000
   -.482             .0000
   -.449                     .0000
   -.434     .0170
   -.418             .0000
   -.397                             .0000
   -.389                     .0110
   -.344                             .0000
   -.336                                     .0030
   -.291                                    -.0110
   -.265                                             .0000
   -.251     .0000
   -.241             .0010
   -.230                                             .0220
   -.225                    -.0200
   -.198                            -.0020
   -.158                                     .0000
   -.133                                             .0050
   -.000     .0100  -.0130  -.0170   .0140
   -.000            -.0130  -.0170   .0140   .0170   .0000
    .133                                             .0220
    .168                                     .0000
    .198                             .0070
    .225                     .0290
    .230                                            -.0170
    .241            -.0210
    .251     .0000
    .266                                             .0000
    .291                                     .0070
    .336                                     .0000
    .344                             .0000
    .389                    -.0080
    .397                             .0000
    .418             .0030
    .434     .0090
    .449                     .0000
    .482             .0000
    .502     .0000
```

```
                                   CAL T14-053 IA36 O2 + T1 + S1 LOWER LH MPS NOZ.          (SUFB06)

MACH  ( 1) =    1.203    BETA  ( 4) =    3.051

 SECTION ( 1)LOWER LH MPS NOZ.              DEPENDENT VARIABLE DELCP

X/DE         .0580    2320   .4060   .5800   .7540   .9280

  Z/DE
   -.502    .0000
   -.482             .0000
   -.449                     .0000
   -.434    .0200
   -.418            -.0220
   -.397                             .0000
   -.389                     .0110
   -.344                             .0050
   -.336                                     .0000
   -.291                                    -.0160
   -.265                                             .0000
   -.251    .0090
   -.241             .0040
   -.230                                             .0270
   - 225                    -.0130
   -.199                            -.0080
   -.168                                     .0420
   -.133                                             .0010
   -.000    .0250   -.0050  -.0150   .0180
   -.000            -.0050  -.0150   .0180   .0140   .0120
    .133                                             .0320
    .168                                    -.0190
    .198                             .0030
    .225                     .0290
    .230                                            -.0090
    .241            -.0380
    .251    .0470
    .265                                             .0000
    .291                                     .0180
    .336                                     .0000
    .344                            -.0100
    .389                    -.0120
    .397                             .0000
    .418             .0270
    .434    .0060
    .449                     .0000
    .482             .0000
    .502    .0000
```

DATE 05 NOV 75 TABULATED DATA FOR CAL T14-053 (IA36)

CAL T14-053 IA36 O2 + T1 + S1 LOWER LH MPS NOZ. (SUFB06)

MACH (1) = 1.203 BETA (5) = 6.079

SECTION (1)LOWER LH MPS NOZ. DEPENDENT VARIABLE DELCP

X/DE	.0580	.2320	.4060	.5800	.7540	.9280
Z/DE						
-.502	.0000					
-.482		.0000				
-.449			.0000			
-.434	.0150					
-.418		-.0170				
-.397				.0000		
-.389			.0090			
-.344				.0040		
-.338					.0000	
-.291					-.0190	
-.266						.0000
-.251	.0070					
-.241		.0030				
-.230						.0260
-.225			-.0150			
-.198				-.0110		
-.168					.0330	
-.133						.0030
-.000	.0180	-.0130	-.0240	.0150		
-.000		-.0130	-.0240	.0150	.0150	.0150
.133						.0280
.168					-.0080	
.198				.0080		
.225			.0120			
230						-.0090
.241		-.0180				
.251	.0430					
.266						.0000
.291					.0170	
.336					.0000	
.344				-.0050		
.389			-.0110			
.397				.0000		
.418		.0170				
.434	[illegible]					
.449			.0000			
.482		.0000				
.502	.0000					

```
                                   CAL T14-053 IA36 O2 + T1 + S1 LOWER LH MPS NOZ.              (SUFB07)    ( 18 DEC 73  )

                 REFERENCE DATA                                                                        PARAMETRIC DATA

SREF  =     49.4000 SQ.FT.   XMRP  =   158.0000 INCHES                          BETA    =      .000   POWER   =     1.000
LREF  =     90.7000 INCHES   YMRP  =      .0000 INCHES                          OPR     =    28.310   SRMPR   =     2.020
BREF  =     90.7000 INCHES   ZMRP  =      .0000 INCHES                          GP1     =    11.000   GY1     =    -3.000
SCALE =       .0190 SCALE                                                       GP2     =      .000   GY2     =    -3.000
                                                                                GP3     =      .000   GY3     =    -3.000

MACH  ( 1) =    1.199    ALPHA ( 1) =    -8.108

 SECTION ( 1)LOWER LH MPS NOZ.                  DEPENDENT VARIABLE DELCP

X/DE         .0580     .2320     .4060     .5800     .7540     .9280

  Z/DE
   -.502     .0000
   -.482               .0000
   -.449                         .0000
   -.434     .0150
   -.418               .0100
   -.397                                   .0000
   -.389                         .0340
   -.344                                   .0270
   -.335                                             .0000
   -.291                                             .0030
   -.265                                                       .0000
   -.251    -.0140
   -.241               .0020
   -.230                                                      -.0310
   -.225                        -.0010
   -.198                                   .0070
   -.168                                             .0480
   -.133                                                       .0250
   -.000    -.0860    -.0710    -.0470     .0020
   -.000              -.0710    -.0470     .0020     .0080     .0050
    .133                                                       .0240
    .168                                            -.0070
    .199                                   .0010
    .225                         .0000
    .230                                                       .0150
    .241              -.0530
    .251     .0090
    .265                                                       .0000
    .291                                             .0280
    .335                                             .0000
    .344                                  -.0080
    .389                        -.0220
    .397                                   .0000
    .418               .0000
    .434    -.0040
    .449                         .0000
    .482               .0000
```

```
                              CAL T14-053 IA36 02 + T1 + S1 LOWER LH MPS NOZ.               (SUFB07)

MACH  ( 1) =    1.199    ALPHA ( 1) =   -8.108

 SECTION ( 1)LOWER LH MPS NOZ.                 DEPENDENT VARIABLE DELCP

X/DE         .0580     .2320     .4060     .5800     .7540     .9280

  Z/DE
    .502     .0000

MACH  ( 1) =    1.198    ALPHA ( 2) =   -4.075

 SECTION ( 1)LOWER LH MPS NOZ.                 DEPENDENT VARIABLE DELCP

X/DE         .0580     .2320     .4060     .5800     .7540     .9280

  Z/DE
   -.502     .0000
   -.482               .0000
   -.449                         .0000
   -.434     .0150
   -.418               .0110
   -.397                                   .0000
   -.389                         .0350
   -.344                                   .0120
   -.336                                             .0000
   -.291                                            -.0030
   -.266                                                       .0000
   -.251     .0150
   -.241               .0000
   -.230                                                       .0070
   -.225                        -.0090
   -.198                                   .0230
   -.168                                             .0650
   -.133                                                       .0230
   -.000    -.0880    -.0570    -.0420    -.0010
   -.000              -.0570    -.0420    -.0010     .0100     .0110
    .133                                                       .0210
    .168                                            -.0180
    .198                                  -.0070
    .225                         .0060
    .230                                                      -.0100
    .241              -.0670
    .251    -.0220
    .266                                                       .0000
    .291                                             .0140
    .336                                             .0000
    .344                                   .0060
    .389                        -.0170
    .397                                   .0000
    .418               .0050
    .434     .0040
    .449                         .0000
```

```
                         CAL T14-053 IA36 O2 + T1 + S1 LOWER LH MPS NOZ.          (SUFB07)

MACH  ( 1) =    1.198   ALPHA ( 2) =   -4.075

 SECTION ( 1)LOWER LH MPS NOZ.              DEPENDENT VARIABLE DELCP

X/DE         .0580     .2320     .4060     .5800     .7540     .9280

  Z/DE
   .482                .0000
   .502      .0000

MACH  ( 1) =    1.197   ALPHA ( 3) =    -.023

 SECTION ( 1)LOWER LH MPS NOZ.              DEPENDENT VARIABLE DELCP

X/DE         .0580     .2320     .4060     .5800     .7540     .9280

  Z/DE
  -.502      .0000
  -.482                .0000
  -.449                          .0000
  -.434      .0530
  -.418                .0290
  -.397                                    .0000
  -.383                          .0240
  -.344                                    .0090
  -.336                                              .0000
  -.291                                              .0050
  -.266                                                        .0000
  -.251      .0230
  -.241                .0000
  -.230                                                        .0070
  -.225                          .0070
  -.198                                    .0230
  -.168                                              .0630
  -.133                                                        .0250
  -.000     -.0760    -.0610    -.0400    -.0020
  -.000               -.0610    -.0400    -.0020     .0150     .0000
   .133                                                        .0040
   .168                                             -.0220
   .198                                   -.0120
   .225                          .0040
   .230                                                       -.0090
   .241               -.0660
   .251     -.0290
   .265                                                        .0000
   .291                                             -.0030
   .336                                              .0000
   .344                                    .0060
   .389                         -.0030
   .397                                    .0000
   .418                .0000
   .434     -.0010
```

```
DATE 05 NOV 75              TABULATED DATA FOR CAL T14-053 (IA36)                                              PAGE  381

                                   CAL T14-053 IA36 O2 + T1 + S1 LOWER LH MPS NOZ.                 (SUFB07)
MACH  ( 1) =    1.197    ALPHA ( 3) =     -.023

 SECTION ( 1)LOWER LH MPS NOZ.                  DEPENDENT VARIABLE DELCP

X/DE          .0580   .2320   .4060   .5800   .7540   .9280

  Z/DE
    .449                      .0000
    .482              .0000
    .502      .0000

MACH  ( 1) =    1.196    ALPHA ( 4) =     4.017

 SECTION ( 1)LOWER LH MPS NOZ.                  DEPENDENT VARIABLE DELCP

X/DE          .0580   .2320   .4060   .5800   .7540   .9280

  Z/DE
   -.502      .0000
   -.482              .0000
   -.449                      .0000
   -.434      .0680
   -.418              .0000
   -.397                              .0000
   -.389                      .0510
   -.344                              .0120
   -.336                                      .0000
   -.291                                      .0080
   -.266                                              .0000
   -.251      .0550
   -.241              .0010
   -.230                                              .0000
   -.225                      .0000
   -.198                              .0440
   -.168                                      .0000
   -.133                                              .0000
   -.000    -.1260  -.0550  -.0460   .0000
   -.000            -.0550  -.0460   .0000   .0090   .0110
    .133                                              .0360
    .168                                      .0000
    .198                             -.0300
    .225                      .0000
    .230                                              .0000
    .241            -.0580
    .251    -.0340
    .266                                              .0000
    .291                                      .0140
    .336                                      .0000
    .344                              .0130
    .389                     -.0460
    .397                              .0000
    .418              .0000
```

REPRODUCIBILITY OF THE
ORIGINAL PAGE IS POOR

```
                               CAL T14-053 IA36 02 + T1 + S1 LOWER RH MPS NOZ.              (SUFC01)

MACH  ( 1) =      .900    ALPHA ( 3) =     .013

 SECTION ( 1)LOWER RH MPS NOZ.              DEPENDENT VARIABLE DELCP

X/DE         .0580    .2320    .4060    .5800    .7540    .9280

  Z/DE
  -.266                                                   .0000
  -.251     -.0050
  -.241              .0410
  -.225                       -.0040
  -.198                                -.0630
  -.168                                         -.0350
  -.133                                                  -.0050
  -.000      .1460    .3760    .2990    .0250
  -.000               .3760    .2990    .0250   -.0120   -.0110
   .133                                                  -.0110
   .168                                         -.0480
   .198                                -.0020
   .225                         .1610
   .230                                                  -.0350
   .241               .4780
   .251      .3370
   .266                                                   .0000
   .291                                          .0140
   .335                                          .0000
   .344                                 .0230
   .389                         .0070
   .397                                 .0000
   .418              -.0100
   .434      .0510
   .449                         .0000
   .482               .0000
   .502      .0000
MACH  ( 1) =      .899    ALPHA ( 4) =    4.005

 SECTION ( 1)LOWER RH MPS NOZ.              DEPENDENT VARIABLE DELCP

X/DE         .0580    .2320    .4060    .5800    .7540    .9280

  Z/DE
  -.502      .0000
  -.482               .0000
  -.449                         .0000
  -.397                                 .0000
  -.336                                          .0000
  -.266                                                   .0000
  -.251      .0210
  -.241               .0760
  -.225                         .0030
  -.198                                -.0550
```

```
DATE 05 NOV 75            TABULATED DATA FOR CAL T14-053 (IA36)                                                PAGE  383
                                   CAL T14-053 IA36 02 + T1 + S1 LOWER LH MPS NOZ.                  (SUFB07)
MACH  ( 1) =    1.200   ALPHA ( 5) =    6.028
 SECTION ( 1)LOWER LH MPS NOZ.              DEPENDENT VARIABLE DELCP
X/DE         .0580   .2320   .4060   .5800   .7540   .9280

  Z/DE
    .418             .0000
    .434     .0090
    .449                     .0000
    .482             .0000
    .502     .0000
```

```
                         CAL T14-053 IA36 O2 + T1 + S1 LOWER LH MPS NOZ.          (SUFB08)   ( 18 DEC 73 )

          REFERENCE DATA                                                               PARAMETRIC DATA

SREF  =   49.4000 SQ.FT.   XMRP  =  158.0000 INCHES                       ALPHA  =    .000   POWER  =    1.000
LREF  =   90.7000 INCHES   YMRP  =     .0000 INCHES                       OPR    =  28.310   SRMPR  =    2.000
BREF  =   90.7000 INCHES   ZMRP  =     .0000 INCHES                       GP1    =  11.000   GY1    =   -9.000
SCALE =     .0190 SCALE                                                   GP2    =    .000   GY2    =   -9.000
                                                                          GP3    =    .000   GY3    =   -9.000

MACH  ( 1) =    1.194   BETA  ( 1) =   -6.074

 SECTION ( 1)LOWER LH MPS NOZ.          DEPENDENT VARIABLE DELCP

X/DE        .0580   .2320   .4060   .5800   .7540   .9280

  Z/DE
   -.502    .0000
   -.482            .0000
   -.449                    .0000
   -.434    .0210
   -.418           -.0340
   -.397                            .0000
   -.389                   -.0220
   -.344                           -.0030
   -.336                                    .0000
   -.291                                    .0060
   -.266                                            .0000
   -.251   -.0390
   -.241           -.0460
   -.230                                            .0300
   -.225                   -.0120
   -.198                            .0040
   -.168                                    .0610
   -.133                                            .0430
   -.000   -.0810  -.0530  -.0300   .0330
   -.000           -.0530  -.0300   .0330   .0400   .0180
    .133                                            .0110
    .168                                    .0090
    .198                            .0210
    .225                    .0330
    .230                                            .0020
    .241           -.0150
    .251    .0360
    .266                                            .0000
    .291                                    .0170
    .336                                    .0000
    .344                            .0110
    .389                    .0010
    .397                            .0000
    .418            .0020
    .434   -.0120
    .449                    .0000
    .482            .0000
```

```
                                  CAL T14-053 IA36 O2 + T1 + S1 LOWER LH MPS NOZ.          (SUFB08)
MACH  ( 1) =    1.194    BETA  ( 1) =   -6.074

 SECTION ( 1)LOWER LH MPS NOZ.             DEPENDENT VARIABLE DELCP

X/DE          .0580     .2320     .4060     .5800     .7540     .9280

  Z/DE
    .502      .0000

MACH  ( 1) =    1.194    BETA  ( 2) =   -3.044

 SECTION ( 1)LOWER LH MPS NOZ.             DEPENDENT VARIABLE DELCP

X/DE          .0580     .2320     .4060     .5800     .7540     .9280

  Z/DE
   -.502      .0000
   -.482                .0000
   -.449                          .0000
   -.434      .0720
   -.418                .0000
   -.397                                    .0000
   -.389                          .0050
   -.344                                   -.0030
   -.336                                              .0000
   -.291                                              .0040
   -.266                                                        .0000
   -.251      .0080
   -.241               -.0170
   -.230                                                        .0000
   -.225                          .0000
   -.198                                    .0240
   -.168                                              .0000
   -.133                                                        .0250
   -.000     -.0660    -.0480    -.0370     .0000
   -.000               -.0480    -.0370     .0000     .0200     .0060
    .133                                                        .0160
    .168                                              .0000
    .198                                   -.0170
    .225                          .0000
    .230                                                        .0000
    .241               -.0510
    .251     -.0110
    .266                                                        .0000
    .291                                              .0180
    .336                                              .0000
    .344                                    .0100
    .389                         -.0220
    .397                                    .0000
    .418                .0000
    .434      .0090
    .449                          .0000
```

```
                    CAL T14-053 IA36 02 + T1 + S1 LOWER LH MPS NOZ.          (SUFB08)

MACH  ( 1) =    1.194   BETA  ( 2) =   -3.044

 SECTION ( 1)LOWER LH MPS NOZ.                DEPENDENT VARIABLE DELCP

X/DE         .0580     .2320     .4060     .5800     .7540     .9280

  Z/DE
    .482               .0000
    .502     .0000

MACH  ( 1) =    1.199   BETA  ( 3) =     .000

 SECTION ( 1)LOWER LH MPS NOZ.                DEPENDENT VARIABLE DELCP

X/DE         .0580     .2320     .4060     .5800     .7540     .9280

  Z/DE
   -.502     .0000
   -.482               .0000
   -.449                         .0000
   -.434     .0570
   -.418               .0310
   -.397                                   .0000
   -.389                         .0300
   -.344                                   .0110
   -.336                                             .0000
   -.291                                            -.0070
   -.265                                                       .0000
   -.251     .0320
   -.241               .0120
   -.230                                                       .0160
   -.225                         .0130
   -.198                                   .0090
   -.168                                             .0290
   -.133                                                       .0280
   -.000    -.0560    -.0480    -.0400    -.0020
   -.000              -.0480    -.0400    -.0020     .0090     .0030
    .133                                                      -.0040
    .168                                             .0020
    .198                                   .0070
    .225                        -.0070
    .230                                                       .0050
    .241              -.0710
    .251    -.0340
    .265                                                       .0000
    .291                                             .0260
    .336                                             .0000
    .344                                   .0200
    .389                        -.0070
    .397                                   .0000
    .418              -.0210
    .434    -.0270
```

```
                                CAL T14-053 IA36 02 + T1 + S1 LOWER LH MPS NOZ.                (SUFB08)

MACH  ( 1) =    1.199    BETA  ( 3  =      .000

 SECTION ( 1)LOWER LH MPS NOZ.               DEPENDENT VARIABLE DELCP

X/DE        .0580   .2320   .4060   .5800   .7540   .9280

  Z/DE
    .449                    .0000
    .482            .0000
    .502    .0000

MACH  ( 1) =    1.195    BETA  ( 4) =     3.049

 SECTION ( 1)LOWER LH MPS NOZ.               DEPENDENT VARIABLE DELCP

X/DE        .0580   .2320   .4060   .5800   .7540   .9280

  Z/DE
   -.502    .0000
   -.482            .0000
   -.449                    .0000
   -.434    .0270
   -.418            .0390
   -.397                            .0000
   -.389                   -.0130
   -.344                            .0000
   -.336                                    .0000
   -.291                                    .0820
   -.266                                            .0000
   -.251    .0720
   -.241           -.0460
   -.230                                            .0440
   -.225                   -.0220
   -.198                            .0300
   -.168                                    .0400
   -.133                                            .0410
   -.000   -.1380  -.1050  -.0700  -.0160
   -.000            .1050  -.0700  -.0160  -.0010   .0110
    .133                                           -.0140
    .168                                           -.0040
    .198                           -.0880
    .225                   -.0070
    .230                                           -.0060
    .241           -.0390
    .251   -.0450
    .266                                            .0000
    .291                                   -.0440
    .336                                    .0000
    .344                           -.0030
    .389                    .0090
    .397                            .0000
    .418           -.0050
```

CAL T14-053 IA36 02 + T1 + S1 LOWER LH MPS NOZ. (SUF808)

MACH (1) = 1.195 BETA (4) = 3.049

SECTION (1)LOWER LH MPS NOZ. DEPENDENT VARIABLE DELCP

X/DE	.0580	.2320	.4060	.5800	.7540	.9280
Z/DE						
.434	-.0120					
.449			.0000			
.482		.0000				
.502	.0000					

MACH (1) = 1.197 BETA (5) = 6.079

SECTION (1)LOWER LH MPS NOZ. DEPENDENT VARIABLE DELCP

X/DE	.0580	.2320	.4060	.5800	.7540	.9280
Z/DE						
-.502	.0000					
-.482		.0000				
-.449			.0000			
-.434	.1330					
-.418		.0420				
-.397				.0000		
-.389			.0110			
-.344				.0210		
-.336					.0000	
-.291					.0200	
-.266						.0000
-.251	.0670					
-.241		-.0100				
-.230						.0110
-.225			-.0080			
-.198				.0100		
-.168					.0400	
-.133						.0190
-.000	-.1410	-.0880	-.0750	-.0350		
-.000		-.0880	-.0750	-.0350	-.0070	.0000
.133						-.0040
.168					-.0210	
.198				-.0270		
.225			-.0400			
.230						.0130
.241		-.0530				
.251	-.0170					
.266						.0000
.291					-.0070	
.336					.0000	
.344				-.0170		
.389			.0000			
.397				.0000		

```
                                 CAL T14-053 IA36 02 + T1 + S1 LOWER LH MPS NOZ.              (SUFB08)

MACH  ( 1) =    1.197   BETA  ( 5) =    6.079

 SECTION ( 1)LOWER LH MPS NOZ.                DEPENDENT VARIABLE DELCP

X/DE          .0580   .2320   .4060   .5800   .7540   .9280

  Z/DE
    .418               -.0030
    .434     -.0220
    .449                       .0000
    .482               .0000
    .502      .0000
```

```
DATE 05 NOV 75            TABULATED DATA FOR CAL T14-053 (IA36)

                                      CAL T14-053 IA36 02 + T1 + S1 LOWER RH MPS NOZ.          (SUFC01)   ( 18 DEC 73  )

                 REFERENCE DATA                                                                  PARAMETRIC DATA

SREF  =    49.4000 SQ.FT.   XMRP  =   158.0000 INCHES                          BETA    =       .000   POWER   =      .000
LREF  =    90.7000 INCHES   YMRP  =       .0000 INCHES                         GP1     =     11.000   GY1     =    -9.000
BREF  =    90.7000 INCHES   ZMRP  =       .0000 INCHES                         GP2     =       .000   GY2     =    -9.000
SCALE =      .0190 SCALE                                                       GP3     =       .000   GY3     =      .000

MACH  ( 1) =      .901    ALPHA ( 1) =   -8.089

 SECTION ( 1)LOWER RH MPS NOZ.                DEPENDENT VARIABLE DELCP

X/DE           .0580    .2320    .4060    .5800    .7540    .9280

  Z/DE
   -.502      .0000
   -.482               .0000
   -.449                        .0000
   -.397                                 .0000
   -.336                                          .0000
   -.266                                                   .0000
   -.251     -.0160
   -.241               .0210
   -.225                       -.0230
   -.198                                -.0240
   -.168                                         -.0100
   -.133                                                  -.0180
   -.000      .1380    .3950    .2750    .0010
   -.000               .3950    .2750    .0010   -.0050    .0010
    .133                                                  -.0160
    .168                                         -.0240
    .198                                 .0090
    .225                        .12 0
    .230                                                  -.0270
    .241               .4820
    .251      .4130
    .266                                                   .0000
    .291                                          .0090
    .336                                          .0000
    .344                                 .0230
    .383                       -.0050
    .397                                 .0000
    .418               .0360
    .434      .0380
    .449                        .0000
    .482               .0000
    .502      .0000
```

```
                        CAL T14-053 IA36 02 + T1 + S1 LOWER RH MPS NOZ.             (SUFC01)

MACH  ( 1) =     .900    ALPHA ( 2) =    -4.049

 SECTION ( 1)LOWER RH MPS NOZ.                 DEPENDENT VARIABLE DELCP

X/DE               .0580     .2320     .4060     .5800     .7540     .9280

  Z/DE
  -.502            .0000
  -.482                      .0000
  -.449                                .0000
  -.397                                          .0000
  -.336                                                    .0000
  -.266                                                              .0000
  -.251           -.0090
  -.241                      .0380
  -.225                               -.0110
  -.198                                         -.0470
  -.168                                                   -.0340
  -.133                                                             -.0040
  -.000            .1490     .4080     .3300     .0010
  -.000                      .4080     .3300     .0010    -.0020    -.0100
   .133                                                             -.0160
   .168                                                   -.0220
   .198                                          .0000
   .225                                .1390
   .230                                                             -.0290
   .241                      .4910
   .251            .4030
   .266                                                              .0000
   .291                                                    .0240
   .336                                                    .0000
   .344                                          .0310
   .389                               -.0070
   .397                                          .0000
   .418                      .0100
   .434            .0540
   .449                                .0000
   .482                      .0000
   .502            .0000
MACH  ( 1) =     .900    ALPHA ( 3) =     .013

 SECTION ( 1)LOWER RH MPS NOZ.                 DEPENDENT VARIABLE DELCP

X/DE               .0580     .2320     .4060     .5800     .7540     .9280

  Z/DE
  -.502            .0000
  -.482                      .0000
  -.449                                .0000
  - 397                                          .0000
  -.336                                                    .0000
```

```
DATE 05 NOV 75                TABULATED DATA FOR CAL T14-053 (IA36)

                                    CAL T14-053 IA36 O2 + T1 + S1 LOWER RH MPS NOZ.                                      PAGE  382
MACH  ( 1) =      .900    ALPHA ( 3) =     .013                                                              (SUFC01)
 SECTION ( 1)LOWER RH MPS NOZ.                   DEPENDENT VARIABLE DELCP
X/DE         .0580    .2320    .4060    .5800    .7540    .9280

 Z/DE
  -.266                                                    .0000
  -.251    -.0050
  -.241             .0410
  -.225                      -.0040
  -.198                               -.0630
  -.168                                        -.0350
  -.133                                                 -.0050
  -.000     .1460   .3760    .2990    .0250
  -.000             .3760    .2990    .0250    -.0120   -.0110
   .133                                                 -.0110
   .168                                        -.0480
   .198                               -.0020
   .225                       .1610
   .230                                                 -.0350
   .241              .4780
   .251     .3370
   .266                                                  .0000
   .291                                         .0140
   .336                                         .0000
   .344                                .0230
   .389                       .0070
   .397                                .0000
   .418             -.0100
   .434     .0510
   .449                       .0000
   .482              .0000
   .502     .0000
MACH  ( 1) =      .899    ALPHA ( 4) =     4.005
 SECTION ( 1)LOWER RH MPS NOZ.                   DEPENDENT VARIABLE DELCP
X/DE         .0580    .2320    .4060    .5800    .7540    .9280

 Z/DE
  -.502     .0000
  -.482              .0000
  -.449                       .0000
  -.397                                .0000
  -.336                                         .0000
  -.266                                                  .0000
  -.251     .0210
  -.241              .0760
  -.225                       .0030
  -.198                               -.0550
```

```
                    CAL T14-053 IA36 O2 + T1 + S1 LOWER RH MPS NOZ.              (SUFC01)

MACH  ( 1) =    .899    ALPHA ( 4) =    4.005

 SECTION ( 1)LOWER RH MPS NOZ.             DEPENDENT VARIABLE DELCP

X/DE         .0580    .2320    .4060    .5800    .7540    .9280

 Z/DE
  -.168                                         -.0550
  -.133                                                    .0050
  -.000      .1680    .4030    .3240    .0390
  -.000               .4030    .3240    .0390   -.0040   -.0290
   .133                                                  -.0140
   .168                                         -.0480
   .198                                  .0020
   .225                         .1630
   .230                                                  -.0430
   .241               .4890
   .251      .3320
   .266                                                    .0000
   .291                                          .0240
   .336                                          .0000
   .344                                  .0290
   .389                         .0120
   .397                                  .0000
   .418              -.0250
   .434      .0340
   .449                         .0000
   .482               .0000
   .502      .0000
MACH  ( 1) =    .899    ALPHA ( 5) =    6.006

 SECTION ( 1)LOWER RH MPS NOZ.             DEPENDENT VARIABLE DELCP

X/DE         .0580    .2320    .4060    .5800    .7540    .9280

 Z/DE
  -.502      .0000
  -.482               .0000
  -.449                         .0000
  -.397                                  .0000
  -.336                                           .0000
  -.266                                                    .0000
  -.251      .0010
  -.241               .0610
  -.225                         .0030
  -.198                                 -.0460
  -.168                                         -.0360
  -.133                                                  -.0080
  -.000      .1710    .4030    .3140    .0150
  -.000               .4030    .3140    .0150    .0100   -.0100
   .133                                                  -.0030
```

```
                                   CAL T14-053 IA36 02 + T1 + S1 LOWER RH MPS NOZ.            (SUFC01)

MACH  ( 1) =     .899    ALPHA ( 5) =    6.006

 SECTION ( 1)LOWER RH MPS NOZ.            DEPENDENT VARIABLE DELCP

X/DE         .0580   .2320   .4060   .5800   .7540   .9280

  Z/DE
    .168                                     -.0660
    .198                             -.0150
    .225                     .1470
    .230                                             -.0350
    .241             .4840
    .251     .3490
    .266                                              .0000
    .291                                      .0070
    .336                                      .0000
    .344                              .0100
    .389                     .0070
    .397                              .0000
    .418             .0080
    .434     .0430
    .449                     .0000
    .482             .0000
    .502     .0000
```

```
DATE 05 NOV 75            TABULATED DATA FOR CAL T14-053 (IA36)                                              PAGE  395

                                    CAL T14-053 IA36 02 + T1 + S1 LOWER RH MPS NOZ.                   (SUFC02)   ( 18 DEC 73  )

                   REFERENCE DATA                                                                      PARAMETRIC DATA

SREF  =      49.4000 SQ.FT.   XMRP  =   158.0000 INCHES                                  ALPHA   =       .000   POWER   =      .000
LREF  =      90.7000 INCHES   YMRP  =      .0000 INCHES                                  GP1     =     11.000   GY1     =    -9.000
BREF  =      90.7000 INCHES   ZMRP  =      .0000 INCHES                                  GP2     =       .000   GY2     =    -9.000
SCALE =        .0190 SCALE                                                               GP3     =       .000   GY3     =      .000

MACH  ( 1) =       .901    BETA  ( 1) =    -6.079

 SECTION ( 1)LOWER RH MPS NOZ.                DEPENDENT VARIABLE DELCP

X/DE           .0580     .2320     .4060     .5800     .7540     .9280

  Z/DE
   -.502       .0000
   -.482                 .0000
   -.449                           .0000
   -.397                                     .0000
   -.336                                               .0000
   -.266                                                         .0000
   -.251       .0170
   -.241                 .0420
   -.225                          -.0360
   -.198                                    -.0470
   -.168                                              -.0380
   -.133                                                        -.0010
   -.000       .1160     .3270     .2020    -.0030
   -.000                 .3270     .2020    -.0030     .0080    -.0230
    .133                                                         .0000
    .168                                              -.0440
    .198                                    -.0130
    .225                           .0700
    .230                                                        -.0410
    .241                 .3140
    .251       .2850
    .266                                                         .0000
    .291                                               .0340
    .336                                               .0000
    .344                                     .0240
    .389                           .0100
    .397                                     .0000
    .418                -.0140
    .434       .0280
    .449                           .0000
    .482                 .0000
    .502       .0000
```

```
                                  CAL T14-053 IA36 02 + T1 + S1 LOWER RH MPS NOZ.                 (SUFC02)

MACH  ( 1) =     .900    BETA  ( 2) =   -3.049

 SECTION ( 1)LOWEP RH MPS NOZ.                DEPENDENT VARIABLE DELCP

X/DE        .0580    .2320    .4060    .5800    .7540    .9280

 Z/DE
  -.502     .0000
  -.482              .0000
  -.449                       .0000
  -.397                                .0000
  -.336                                         .0000
  -.266                                                  .0000
  -.251     .0030
  -.241              .0430
  -.225                      -.0130
  -.198                               -.0430
  -.168                                        -.0190
  -.133                                                 -.0020
  -.000     .1200    .3280    .2400    .0070
  -.000              .3280    .2400    .0070    .0140   -.0050
   .133                                                 -.0030
   .168                                        -.0400
   .199                                .0060
   .225                       .1100
   .230                                                 -.0290
   .241              .3620
   .251     .3160
   .266                                                  .0000
   .291                                         .0260
   .336                                         .0000
   .344                                .0220
   .389                       .0160
   .397                                .0000
   .418              .0040
   .434     .0450
   .449                       .0000
   .482              .0000
   .502     .0000
MACH  ( 1) =     .901    BETA  ( 3) =     .000

 SECTION ( 1)LOWER RH MPS NOZ.                DEPENDENT VARIABLE DELCP

X/DE        .0580    .2320    .4060    .5800    .7540    .9290

 Z/DE
  -.502     .0000
  -.482              .0000
  -.449                       .0000
  -.397                                .0000
  -.336                                         .0000
```

```
                           CAL T14-053 IA36 O2 + T1 + S1 LOWER RH MPS NOZ.          (SUFC02)

MACH  ( 1) =     .901   BETA  ( 3) =     .000

 SECTION ( 1)LOWER RH MPS NOZ.             DEPENDENT VARIABLE DELCP

X/DE         .0580   .2320   .4060   .5800   .7540   .9280

  Z/DE
   -.266                                             .0000
   -.251     .0030
   -.241             .0500
   -.225                    -.0200
   -.198                            -.0570
   -.168                                    -.0450
   -.133                                             .0060
   -.000     .1330   .3770   .2870   .0290
   -.000             .3770   .2870   .0290  -.0070  -.0380
    .133                                            -.0190
    .168                                    -.0360
    .198                            -.0020
    .225                     .1560
    .230                                            -.0360
    .241             .4770
    .251     .3350
    .266                                             .0000
    .291                                     .0210
    .336                                     .0000
    .344                             .0210
    .389                     .0110
    .397                             .0000
    .418            -.0040
    .434     .0500
    .449                     .0000
    .482             .0000
    .502     .0000

MACH  ( 1) =     .900   BETA  ( 4) =    3.051

 SECTION ( 1)LOWER RH MPS NOZ.             DEPENDENT VARIABLE DELCP

X/DE         .0580   .2320   .4060   .5800   .7540   .9280

  Z/DE
   -.502     .0000
   -.482             .0000
   -.449                      0000
   -.397                             .0000
   -.336                                     .0000
   -.266                                             .0000
   -.251     .0040
   -.241             .0680
   -.225                    -.0070
   -.198                            -.0450
```

CAL T14-053 IA36 O2 + T1 + S1 LOWER RH MPS NOZ. (SUFC02)

MACH (1) = .900 BETA (4) = 3.051

SECTION (1)LOWER RH MPS NOZ. DEPENDENT VARIABLE DELCP

X/DE	.0580	.2320	.4060	.5800	.7540	.9280
Z/DE						
-.168					-.0340	
-.133						-.0030
-.000	.1710	.4360	.4000	.0440		
-.000		.4360	.4000	.0440	-.0190	-.0120
.133						-.0110
.168					-.0530	
.198				-.0030		
.225			.2370			
.230						-.0300
.241		.5970				
.251	.3810					
.266						.0000
.291					.0080	
.336					.0000	
.344				.0130		
.389			.0080			
.397				.0000		
.418		.0000				
.434	.0520					
.449			.0000			
.482		.0000				
.502	.0000					

MACH (1) = .901 BETA (5) = 6.089

SECTION (1)LOWER RH MPS NOZ. DEPENDENT VARIABLE DELCP

X/DE	.0580	.2320	.4060	.5800	.7540	.9280
Z/DE						
-.502	.0000					
-.482		.0000				
-.449			.0000			
-.397				.0000		
-.336					.0000	
-.266						.0000
-.251	.0220					
-.241		.1140				
-.225			.0510			
-.199				-.0480		
-.168					-.0600	
-.133						.0130
-.000	.1840	.4720	.5010	.0850		
-.000		.4720	.5010	.0850	-.0210	-.0160
.133						-.0160

```
DATE 05 NOV 75              TABULATED DATA FOR CAL T14-053 (IA36)                                                            PAGE  399

                                         CAL T14-053 IA36 02 + T1 + S1 LOWER RH MPS NOZ.                    (SUFC02)

MACH  ( 1) =     .901    BETA  ( 5) =    6.089

 SECTION ( 1)LOWER RH MPS NOZ.                  DEPENDENT VARIABLE DELCP

X/DE         .0580   .2320   .4060   .5800   .7540   .9280

  Z/DE
    .168                                     -.0470
    .198                             -.0060
    .225                     .3750
    .230                                             -.0300
    .241             .6860
    .251     .3970
    .266                                              .0000
    .291                                      .0090
    .336                                      .0000
    .344                              .0350
    .389                     .0020
    .397                              .0000
    .418             .0500
    .434     .1140
    .449                     .0000
    .482             .0000
    .502     .0000
```

```
                                         CAL T14-053 IA36 02 + T1 + S1 LOWER RH MPS NOZ.                 (SUFC03)    ( 18 DEC 73  )

             PEFERENCE DATA                                                                              PARAMETRIC DATA

SREF  =      49.4000 SQ.FT.    XMRP  =   158.0000 INCHES                             BETA    =      .000   POWER   =     1.000
LREF  =      90.7000 INCHES    YMRP  =      .0000 INCHES                             OPR     =    36.200   SRMPR   =     2.330
BPEF  =      90.7000 INCHES    ZMRP  =      .0000 INCHES                             GP1     =    11.000   GY1     =    -9.000
SCALE =        .0190 SCALE                                                           GP2     =      .000   GY2     =    -9.000
                                                                                     GP3     =      .000   GY3     =    -9.000

MACH  ( 1) =      .897   ALPHA ( 1) =   -8.088

 SECTION ( 1)LOWER RH MPS NOZ.               DEPENDENT VARIABLE DELCP

X/DE         .0580   .2320   .4050   .5800   .7540   .9280

  Z/DE
   -.502     .0000
   -.482             .0000
   -.449                     .0000
   -.397                             .0000
   -.336                                     .0000
   -.266                                             .0000
   -.251    -.1220
   -.241             .0680
   -.225                    -.0430
   -.198                            -.0450
   -.168                                    -.0250
   -.133                                             .0180
   -.000     .2070   .5080   .3610   .0230
   -.000             .5080   .3610   .0230   .0290  -.0180
    .133                                            -.0230
    .168                                    -.0790
    .198                             .0190
    .225                     .1430
    .230                                            -.0840
    .241             .6240
    .251     .4720
    .266                                             .0000
    .291                                     .0150
    .336                                     .0000
    .344                             .0070
    .389                     .0580
    .397                             .0100
    .418            -.0220
    .434    -.0020
    .449                     .0000
    .482             .0000
    .502     .0000
```

```
                                CAL T14-053 IA36 02 + T1 + S1 LOWER RH MPS NOZ.              (SUFC03)
MACH  ( 1) =     .899   ALPHA ( 2) =   -4.038

 SECTION ( 1)LOWER RH MPS NOZ.                      DEPENDENT VARIABLE DELCP

X/DE          .0580   .2320   .4060   .5800   .7540   .9280

  Z/DE
   -.502     .0000
   -.482             .0000
   -.449                     .0000
   -.397                             .0000
   -.336                                     .0000
   -.266                                             .0000
   -.251   -.1220
   -.241             .0770
   -.225                     .0030
   -.198                           -.0540
   -.168                                   -.0380
   -.133                                             .0280
   -.000     .1770   .4700   .4090   .0080
   -.000             .4700   .4090   .0080 -.0300  -.0290
    .133                                            -.0100
    .168                                   -.0200
    .198                             .0040
    .225                     .1930
    .230                                            -.0220
    .241             .6430
    .251     .4320
    .266                                             .0000
    .291                                     .0150
    .336                                     .0000
    .344                             .0110
    .389                     .0020
    .397                             .0000
    .418           -.0300
    .434   -.0040
    .449                     .0000
    .482             .0000
    .502     .0000
MACH  ( 1) =     .901   ALPHA ( 3) =     .001

 SECTION ( 1)LOWER RH MPS NOZ.                      DEPENDENT VARIABLE DELCP

X/DE          .0580   .2320   .4060   .5800   .7540   .9280

  Z/DE
   -.502     .0000
   -.482             .0000
   -.449                     .0000
   -.397                             .0000
   -.336                                     .0000
```

CAL T14-053 IA36 02 + T1 + S1 LOWER RH MPS NOZ. (SUFC03)

MACH (1) = .901 ALPHA (3) = .001

SECTION (1)LOWER RH MPS NOZ. DEPENDENT VARIABLE DELCP

X/DE	.0580	.2320	.4060	.5800	.7540	.9280
Z/DE						
-.266						.0000
-.251	-.1060					
-.241		.0820				
-.225			.0060			
-.198				-.0590		
-.168					-.0430	
-.133						.0130
-.000	.1570	.4520	.4410	.0260		
-.000		.4520	.4410	.0260	-.0400	-.0140
.133						-.0100
.168					-.0070	
.198				.0160		
.225			.2450			
.230						-.0090
.241		.6160				
.251	.3480					
.266						.0000
.291					.0110	
.336					.0000	
.344				-.0010		
.389			-.0200			
.397				.0000		
.418		-.0190				
.434	.0120					
.449			.0000			
.482		.0000				
.502	.0000					

MACH (1) = .902 ALPHA (4) = 4.026

SECTION (1)LOWER RH MPS NOZ. DEPENDENT VARIABLE DELCP

X/DE	.0580	.2320	.4060	.5800	.7540	.9280
Z/DE						
-.502	.0000					
-.482		.0000				
.449			.0000			
-.397				.0000		
-.336					.0000	
-.266						.0000
-.251	-.0690					
-.241		.1210				
-.225			.0130			
-.198				-.0610		

```
                                  CAL T14-053 IA36 02 + T1 + S1 LOWER RH MPS NOZ.                  (SUFC03)
MACH  ( 1) =      .902    ALPHA ( 4) =     4.026

 SECTION ( 1)LOWER RH MPS NOZ.                    DEPENDENT VARIABLE DELCP

X/DE          .0580     .2320     .4060     .5800     .7540     .9280

  Z/DE
   -.158                                             -.0580
   -.133                                                        .0300
   -.000      .1750     .4900     .4680     .0480
   -.000                .4900     .4680     .0480    -.0440    -.0330
    .133                                                       -.0100
    .168                                             -.0240
    .198                                    .0120
    .225                          .2230
    .230                                                       -.0190
    .241                .6290
    .251      .3830
    .266                                                        .0000
    .291                                              .0220
    .336                                              .0000
    .344                                    .0030
    .389                         -.0100
    .397                                    .0000
    .418               -.0370
    .434      .0220
    .449                          .0000
    .482                .0000
    .502      .0000
MACH  ( 1) =      .898    ALPHA ( 5) =     6.021

 SECTION ( 1)LOWER RH MPS NOZ.                    DEPENDENT VARIABLE DELCP

X/DE          .0580     .2320     .4060     .5800     .7540     .9280

  Z/DE
   -.502      .0000
   -.482                .0000
   -.449                          .0000
   -.397                                    .0000
   -.336                                              .0000
   -.266                                                        .0000
   -.251     -.0980
   -.241                .0910
   -.225                         -.0240
   -.198                                   -.0630
   -.168                                             -.0300
   -.133                                                       -.0010
   -.000      .1760     .4930     .4500     .0470
   -.000                .4930     .4500     .0470    -.0070    -.0140
    .133                                                       -.0030
```

```
DATE 05 NOV 75              TABULATED DATA FOR CAL T14-053 (IA36)

                                     CAL T14-053 IA36 02 + T1 + S1 LOWER RH MPS NOZ.                 (SUFC03)

MACH  ( 1) =     .898    ALPHA ( 5) =    6.021

 SECTION ( 1)LOWER RH MPS NOZ.              DEPENDENT VARIABLE DELCP

X/DE         .0580   .2320   .4060   .5800   .7540   .9280

  Z/DE
    .168                                     -.0600
    .198                             .0080
    .225                     .2250
    .233                                             -.0510
    .241             .6280
    .251     .4060
    .266                                              .0000
    .291                                     -.0120
    .336                                      .0000
    .344                            -.0160
    .389                     .0240
    .397                             .0000
    .418            -.0140
    .434     .0180
    .449                     .0000
    .482             .0000
    .502     .0000
```

```
DATE 05 NOV 75             TABULATED DATA FOR CAL T14-053 (IA36)                                   PAGE  405

                                        CAL T14-053 IA36 02 + T1 + S1 LOWER RH MPS NOZ.            (SUFC04)    ( 18 DEC 73  )

                 REFERENCE DATA                                                                    PARAMETRIC DATA

SREF   =    49.4000 SQ.FT.   XMRP  =    158.0000 INCHES                          ALPHA   =      .000   POWER   =     1.000
LREF   =    90.7000 INCHES   YMRP  =       .0000 INCHES                          OPR     =    36.200   SRMPR   =     2.330
BREF   =    90.7000 INCHES   ZMRP  =       .0000 INCHES                          GP1     =    11.000   GY1     =    -9.000
SCALE  =      .0190 SCALE                                                        GP2     =      .000   GY2     =    -9.000
                                                                                 GP3     =      .000   GY3     =    -9.000

MACH  ( 1) =     .999   BETA  ( 1) =   -6.078

 SECTION ( 1)LOWER RH MPS NOZ.                 DEPENDENT VARIABLE DELCP

X/DE         .0580   .2320   .4060   .5800   .7540   .9280

  Z/DE
  -.502      .0000
  -.482              .0000
  -.449                      .0000
  -.397                              .0000
  -.336                                      .0000
  -.266                                              .0000
  -.251     -.1010
  -.241              .0820
  -.225                     -.0030
  -.198                             -.0630
  -.168                                     -.0280
  -.133                                              .0140
  -.000      .1140   .4520   .3610   .0170
  -.000              .4520   .3610   .0170  -.0160  -.0210
   .133                                             -.0270
   .168                                     -.0170
   .198                              .0280
   .225                      .1640
   .230                                             -.0340
   .241              .4930
   .251      .3710
   .266                                              .0000
   .291                                      .0330
   .336                                      .0000
   .344                              .0140
   .389                      .0020
   .397                              .0000
   .418             -.0220
   .434     -.0080
   .449                      .0000
   .482              .0000
   .502      .0000
```

```
                         CAL T14-053 IA36 02 + T1 + S1 LOWER RH MPS NOZ.          (SUFC04)

MACH  ( 1) =     .900   BETA  ( 2) =    -3.049

 SECTION ( 1)LOWER RH MPS NOZ.                  DEPENDENT VARIABLE DELCP

X/DE          .0580   .2320   .4060    5800   .7540   .9280

  Z/DE
   -.502     .0000
   -.482             .0000
   -.449                     .0000
   -.397                             .0000
   -.336                                     .0000
   -.266                                             .0000
   -.251    -.1070
   -.241             .0660
   -.225                    -.0080
   -.196                            -.0540
   -.168                                    -.0310
   -.133                                             .0230
   -.000     .1100   .4190   .3520   .0280
   -.000             .4190   .3520   .0280  -.0140  -.0270
    .133                                            -.0210
    .168                                    -.0300
    .198                             .0090
    .225                     .1900
    .230                                            -.0350
    .241             .4740
    .251     .3200
    .265                                             .0000
    .291                                     .0180
    .336                                     .0000
    .344                             .0160
    .383                     .0190
    .397                             .0000
    .418            -.0050
    .434     .0230
    .449                     .0000
    .482             .0000
    .502     .0000
MACH  ( 1) =     .899   BETA  ( 3) =      .000

 SECTION ( 1)LOWER RH MPS NOZ.                  DEPENDENT VARIABLE DELCP

X/DE          .0580   .2320   .4060   .5800   .7540   .9280

  Z/DE
   -.502     .0000
   -.482             .0000
   -.449                     .0000
   -.397                             .0000
   -.336                                     .0000
```

```
                                      CAL T14-053 IA35 O2 + T1 + S1 LOWER RH MPS NOZ.               (SUFC04)
MACH  ( 1) =     .899    BETA  ( 3) =     .000
 SECTION ( 1)LOWER RH MPS NOZ.                    DEPENDENT VARIABLE DELCP
X/DE          .0580   .2320   .4060   .5800   .7540   .9280

  Z/DE
   -.266                                               .0000
   -.251    -.0970
   -.241             .0900
   -.225                    -.0150
   -.198                            -.0600
   -.168                                    -.0370
   -.133                                               .0180
   -.000     .1400   .4560   .4260   .0310
   -.000             .4560   .4260   .0310  -.0250  -.0210
    .133                                              -.0070
    .168                                    -.0300
    .198                             .0150
    .225                     .2360
    .230                                              -.0320
    .241             .5950
    .251     .3500
    .266                                               .0000
    .291                                     .0070
    .336                                     .0000
    .344                             .0030
    .389                     .0060
    .397                             .0000
    .418            -.0200
    .434     .0290
    .449                     .0000
    .482             .0000
    .502     .0000
MACH  ( 1) =     .898    BETA  ( 4) =    3.051
 SECTION ( 1)LOWER RH MPS NOZ.                    DEPENDENT VARIABLE DELCP
X/DE          .0580   .2320   .4060   .5800   .7540   .9280

  Z/DE
   -.502     .0000
   -.482             .0000
   -.449                     .0000
   -.397                             .0000
   -.336                                     .0000
   -.266                                               .0000
   -.251    -.0620
   -.241             .1080
   -.225                     .0380
   -.198                            -.0340
```

```
                                     CAL T14-053 IA36 O2 + T1 + S1 LOWER RH MPS NOZ.                 (SUFC04)

MACH  ( 1) =      .898    BETA  ( 4) =     3.051

 SECTION ( 1)LOWER RH MPS NOZ.               DEPENDENT VARIABLE DELCP

X/DE          .0580   .2320   .4060   .5800   .7540   .9280

  Z/DE
   -.168                                      -.0450
   -.133                                              .0320
   -.000     .2550   .5340   .5410   .0690
   -.000             .5340   .5410   .0690   -.0390  -.0250
    .133                                             -.0300
    .168                                     -.0300
    .198                             .0130
    .225                     .3640
    .230                                             -.0270
    .241             .7250
    .251     .3780
    .265                                              .0000
    .291                                      .0020
    .336                                      .0000
    .344                             .0180
    .389                     .0060
    .397                             .0000
    .418            -.0370
    .434     .0250
    .449                     .0000
    .482             .0000
    .502     .0000

MACH  ( 1) =      .899    BETA  ( 5) =     6.088

 SECTION ( 1)LOWER RH MPS NOZ.               DEPENDENT VARIABLE DELCP

X/DE          .0580   .2320   .4060   .5800   .7540   .9280

  Z/DE
   -.502     .0000
   -.482             .0000
   -.449                     .0000
   -.397                             .0000
   -.335                                      .0000
   -.266                                              .0000
   -.251    -.0420
   -.241             .1320
   -.225                     .0710
   -.198                            -.0290
   -.168                                     -.0440
   -.133                                              .0110
   -.000     .3060   .5670   .6770   .1300
   -.000             .5670   .6770   .1300   -.0230  -.0310
    .133                                             -.0370
```

```
DATE 05 NOV 75          TABULATED DATA FOR CAL T14-053 (IA36)

                             CAL T14-053 IA36 02 + T1 + S1 LOWER RH MPS NOZ.              (SUFC04)

MACH  ( 1) =     .899    BETA  ( 5) =    6.088

 SECTION ( 1)LOWER RH MPS NOZ.              DEPENDENT VARIABLE DELCP

X/DE        .0580   .2320   .4060   .5800   .7540   .9280

  Z/DE
   .168                                    -.0310
   .198                            .0240
   .225                    .5080
   .230                                            -.0170
   .241            .8150
   .251     .3870
   .266                                             .0000
   .291                                     .0180
   .336                                     .0000
   .344                            .0220
   .389                   -.0080
   .397                            .0000
   .418           -.0440
   .434     .0790
   .449                    .0000
   .482            .0000
   .502     .0000
```

```
DATE 05 NOV 75            TABULATED DATA FOR CAL T14-053 (IA36)
                                                                                      (SUFC05)    ( 18 DEC 73  )
                                  CAL T14-053 IA36 02 + T1 + S1 LOWER RH MPS NOZ.
                                                                                   PARAMETRIC DATA
                  REFERENCE DATA
                                                                      BETA    =      .000   POWER   =      .000
SREF  =    49.4000 SQ.FT.   XMRP  =   158.0000 INCHES                 GP1     =    11.000   GY1     =    -9.000
LREF  =    90.7000 INCHES   YMRP  =      .0000 INCHES                 GP2     =      .000   GY2     =    -9.000
BREF  =    90.7000 INCHES   ZMRP  =      .0000 INCHES                 GP3     =      .000   GY3     =      .000
SCALE =      .0190 SCALE

MACH  ( 1) =     1.203    ALPHA ( 1) =    -8.101

 SECTION ( 1)LOWER RH MPS NOZ.                  DEPENDENT VARIABLE DELCP

X/DE           .0580    .2320    .4060    .5800    .7540    .9280

  Z/DE
   -.502       .0000
   -.482                .0000
   -.449                         .0000
   -.397                                  .0000
   -.336                                           .0000
   -.266                                                    .0000
   -.251      -.0100
   -.241                .0370
   -.225                         .0490
   -.198                                 -.0540
   -.168                                          -.0210
   -.133                                                   -.0150
   -.000       .3210    .5050    .4000    .0150
   -.000                .5050    .4000    .0150   -.0240    .0100
    .133                                                   -.0090
    .168                                          -.0260
    .198                                  .0070
    .225                         .2790
    .230                                                   -.0180
    .241                .7590
    .251       .6840
    .266                                                    .0000
    .291                                           .0240
    .336                                           .0000
    .344                                  .0260
    .389                         .0950
    .397                                  .0000
    .418                .1770
    .434       .1540
    .449                         .0000
    .482                .0000
    .502       .0000
```

```
                              CAL T14-053 IA36 02 + T1 + S1 LOWER RH MPS NOZ.          (SUFC05)

MACH  ( 1) =    1.202    ALPHA ( 2) =    -4.038

 SECTION ( 1)LOWER RH MPS NOZ.              DEPENDENT VARIABLE DELCP

X/DE        .0580     .2320     .4060     .5800     .7540     .9280

  Z/DE
   -.502    .0000
   -.482              .0000
   -.449                        .0000
   -.397                                  .0000
   -.336                                            .0000
   -.266                                                      .0000
   -.251   -.0060
   -.241              .0180
   -.225                        .0180
   -.198                                 -.0350
   -.168                                           -.0120
   -.133                                                     -.0220
   -.000    .2940     .4730     .3100     .0140
   -.000              .4730     .3100     .0140    -.0100     .0070
    .133                                                     -.0150
    .168                                           -.0330
    .198                                  .0090
    .225                        .1820
    .230                                                     -.0320
    .241              .5980
    .251    .6330
    .266                                                      .0000
    .291                                            .0140
    .336                                            .0000
    .344                                  .0120
    .389                        .0380
    .397                                  .0000
    .418              .1070
    .434    .0700
    .449                        .0000
    .482              .0000
    .502    .0000

MACH  ( 1) =    1.203    ALPHA ( 3) =    -.011

 SECTION ( 1)LOWER RH MPS NOZ.              DEPENDENT VARIABLE DELCP

X/DE        .0580     .2320     .4060     .5800     .7540     .9280

  Z/DE
   -.502    .0000
   -.482              .0000
   -.449                        .0000
   -.397                                  .0000
   -.335                                            .0000
```

REPRODUCIBILITY OF THE
ORIGINAL PAGE IS POOR

```
                 CAL T14-053 IA36 O2 + T1 + S1 LOWER RH MPS NOZ.          (SUFC05)

MACH  ( 1) =    1.203    ALPHA ( 3) =    -.011

 SECTION ( 1)LOWER RH MPS NOZ.              DEPENDENT VARIABLE DELCP

X/DE         .0580     .2320     .4060     .5800     .7540     .9280

  Z/DE
  -.266                                                        .0000
  -.251     -.0010
  -.241               .0230
  -.225                         .0040
  -.198                                  -.0120
  -.168                                            -.0020
  -.133                                                       -.0230
  -.000      .2810     .4410     .2330     .0040
  -.000                .4410     .2330     .0040     .0170     .0050
   .133                                                       -.0040
   .168                                            -.0390
   .198                                  -.0040
   .225                          .1110
   .230                                                       -.0300
   .241                .4500
   .251      .5040
   .266                                                        .0000
   .291                                             .0080
   .336                                             .0000
   .344                                   .0070
   .389                          .0210
   .397                                   .0000
   .418                .0600
   .434      .0280
   .449                          .0000
   .482                .0000
   .502      .0000
MACH  ( 1) =    1.203    ALPHA ( 4) =    4.003

 SECTION ( 1)LOWER RH MPS NOZ.              DEPENDENT VARIABLE DELCP

X/DE         .0580     .2320     .4060     .5800     .7540     .9280

  Z/DE
  -.502      .0000
  -.482                .0000
  -.449                          .0000
  -.397                                   .0000
  -.336                                             .0000
  -.266                                                        .0000
  -.251      .0150
  -.241                .0390
  -.225                         -.0110
  -.198                                  -.0200
```

```
DATE 05 NOV 75           TABULATED DATA FOR CAL T14-053 (IA36)                                                   PAGE  413

                                   CAL T14-053 IA36 02 + T1 + S1 LOWER RH MPS NOZ.                        (SUFC05)
MACH  ( 1) =     1.203    ALPHA ( 4) =     4.003
 SECTION ( 1)LOWER RH MPS NOZ.                      DEPENDENT VARIABLE DELCP

X/DE          .0580    .2320    .4060    .5800    .7540    .9280

  Z/DE
   -.158                                          -.0100
   -.133                                                   -.0210
   -.000      .3010    .4060    .1850   -.0190
   -.000               .4060    .1850   -.0190    .0110    .0060
    .133                                                    .0020
    .168                                          -.0310
    .198                                  .0110
    .225                         .0470
    .230                                                   -.0360
    .241               .3480
    .251      .4400
    .266                                                    .0000
    .291                                           .0070
    .336                                           .0000
    .344                                 -.0010
    .389                         .0230
    .397                                  .0000
    .418               .0200
    .434     -.0090
    .449                         .0000
    .482               .0000
    .502      .0000
MACH  ( 1) =     1.202    ALPHA ( 5) =     6.018
 SECTION ( 1)LOWER RH MPS NOZ.                      DEPENDENT VARIABLE DELCP

X/DE          .0580    .2320    .4060    .5800    .7540    .9280

  Z/DE
   -.502      .0000
   -.482               .0000
   -.449                         .0000
   -.397                                  .0000
   -.336                                           .0000
   -.266                                                    .0000
   -.251      .0250
   -.241               .0390
   -.225                        -.0170
   -.198                                 -.0200
   -.168                                          -.0120
   -.133                                                   -.0270
   -.000      .0000    .3870    .1530   -.0220
   -.000               .3870    .1530   -.0220    .0130    .0080
    .133                                                   -.0090
```

```
DATE 05 NOV 75            TABULATED DATA FOR CAL T14-053 (IA36)

                                  CAL T14-053 IA36 02 + T1 + S  LOWER RH MPS NOZ.              (SUFC05)

MACH  ( 1) =    1.202    ALPHA ( 5) =    6.018

 SECTION ( 1)LOWER RH MPS NOZ.                 DEPENDENT VARIABLE DELCP

X/DE         .0530   .2320   .4060   .5800   .7540   .9280

  Z/DE
    .158                                     -.0300
    .198                             .0170
    .225                     .0240
    .230                                             -.0420
    .241             .2660
    .251     .3600
    .266                                              .0000
    .291                                      .0060
    .305                                      .0000
    .314                             .0000
    .329                     .0250
    .397                             .0000
    .418             .0210
    .434    -.0160
    .449                     .0000
    .482             .0000
    .502     .0000
```

```
DATE 05 NOV 75              TABULATED DATA FOR CAL T14-053 (IA36)                                                 PAGE  415

                                             CAL T14-053 IA36 O2 + T1 + S1 LOWER RH MPS NOZ.            (SUFC06)    ( 18 DEC 73  )

                  REFERENCE DATA                                                                     PARAMETRIC DATA

SREF  =     49.4000 SQ.FT.    XMRP  =    158.0000 INCHES                             ALPHA  =        .000   POWER  =       .000
LREF  =     90.7000 INCHES    YMRP  =       .0000 INCHES                             GP1    =      11.000   GY1    =     -9.000
BREF  =     90.7000 INCHES    ZMRP  =       .0000 INCHES                             GP2    =        .000   GY2    =     -9.000
SCALE =       .0190 SCALE                                                            GP3    -        .000   GY3    =       .000

MACH  ( 1) =     1.202    BETA  ( 1) =    -6.079

 SECTION ( 1)LOWER RH MPS NOZ.                  DEPENDENT VARIABLE DELCP

X/DE         .0580    .2320    .4060    .5800    .7540    .9280

  Z/DE
   -.502     .0000
   -.482              .0000
   -.449                       .0000
   -.397                                .0000
   -.336                                         .0000
   -.266                                                  .0000
   -.251     .0090
   -.241              .0220
   -.225                      -.0150
   -.198                               -.0020
   -.168                                        -.0140
   -.133                                                 -.0060
   -.000     .1990    .3080    .1220   -.0280
   -.000              .3080    .1220   -.0280    .0290    .0000
    .133                                                  .0040
    .168                                        -.0310
    .198                                .0030
    .225                      -.0050
    .230                                                 -.0310
    .241              .2610
    .251     .3570
    .266                                                  .0000
    .291                                         .0120
    .336                                         .0000
    .344                                .0050
    .389                       .0070
    .397                                .0000
    .418             -.0250
    .434     .0170
    .449                       .0000
    .482              .0000
    .502     .0000
```

```
                                       CAL T14-053 IA36 02 + T1 + S1 LOWER RH MPS NOZ.                (SUFC06)

MACH  ( 1) =    1.202    BETA  ( 2) =    -3.051

 SECTION ( 1)LOWER RH MPS NOZ.                 DEPENDENT VARIABLE DELCP

X/DE          .0580   .2320   .4060   .5800   .7540   .9280

  Z/DE
   -.502      .0000
   -.482              .0000
   -.449                      .0000
   -.397                              .0000
   -.336                                      .0000
   -.266                                              .0000
   -.251      .0020
   -.241              .0180
   -.225                     -.0400
   -.198                              .0000
   -.168                                     -.0130
   -.133                                             -.0100
   -.000      .2100   .3430   .1460  -.0270
   -.000              .3430   .1450  -.0270   .0270  -.0040
    .133                                              .0110
    .168                                     -.0350
    .198                             -.0050
    .225                      .0340
    .230                                             -.0340
    .241              .3420
    .251      .4100
    .265                                              .0000
    .291                                      .0130
    .336                                      .0000
    .344                              .0030
    .339                      .0110
    .397                              .0000
    .418             -.0110
    .434      .0320
    .449                      .0000
    .482              .0000
    .502      .0000
MACH  ( 1) =    1.202    BETA  ( 3) =     .000

 SECTION ( 1)LOWER RH MPS NOZ.                 DEPENDENT VARIABLE DELCP

X/DE          .0580   .2320    4060   .5800   .7540   .9280

  Z/DE
   -.502      .0000
   -.482              .0000
   -.449                      .0000
   -.397                              .0000
   -.336                                      .0000
```

```
                                  CAL T14-053 IA36 O2 + T1 + S1 LOWER RH MPS NOZ.              (SUFC06)

MACH  ( 1) =    1.202   BETA  ( 3) =     .000

 SECTION ( 1)LOWER RH MPS NOZ.               DEPENDENT VARIABLE DELCP

X/DE         .0580   .2320   .4060   .5800   .7540   .9280

  Z/DE
   -.266                                             .0000
   -.251     .0000
   -.241             .0000
   -.225                    -.0110
   -.198                            -.0080
   -.168                                     .0000
   -.133                                             .0000
   -.000     .2580   .4240   .2210  -.0030
   -.000             .4240   .2210  -.0030   .0210   .0000
    .133                                             .0050
    .168                                    -.0410
    .198                             .0000
    .225                     .1050
    .230                                            -.0320
    .241             .4570
    .251     .0000
    .266                                             .0000
    .291                                     .0000
    .336                                     .0000
    .344                             .0000
    .389                     .0250
    .397                             .0000
    .418             .0000
    .434     .0140
    .449                     .0000
    .482             .0000
    .502     .0000
MACH  ( 1) =    1.203   BETA  ( 4) =    3.051

 SECTION ( 1)LOWER RH MPS NOZ.               DEPENDENT VARIABLE DELCP

X/DE         .0580   .2320   .4060   .5800   .7540   .9280

  Z/DE
   -.502     .0000
   -.482             .0000
   -.449                     .0000
   -.397                             .0000
   -.336                                     .0000
   -.266                                             .0000
   -.251     .0130
   -.241             .0480
   -.225                     .0160
   -.198                            -.0130
```

```
                              CAL T14-053 IA36 C2 + T1 + S1 LOWER RH MPS NOZ.           (SUFCOF)

MACH  ( 1) =    1.203    BETA  ( 4) =    3.051

 SECTION ( 1)LOWER RH MPS NOZ.              DEPENDENT VARIABLE DELCP

X/DE          .0580   .2320   .4060   .5800   .7540   .9280

  Z/DE
   -.168                                      -.0120
   -.133                                              -.0120
   -.000      .3400   .4950   .3690   .0250
   -.000              .4950   .3690   .0250   .0050    .0020
    .133                                               .0010
    .168                                      -.0410
    .198                              .0090
    .225                      .2080
    .230                                              -.0340
    .241              .6220
    .251      .6200
    .266                                               .0000
    .291                                       .0090
    .336                                       .0000
    .344                              .0160
    .389                      .0490
    .397                              .0000
    .418              .0600
    .434      .0610
    .449                      .0000
    .482              .0000
    .502      .0000
MACH  ( 1) =    1.203    BETA  ( 5) =    6.079

 SECTION ( 1)LOWER RH MPS NOZ.              DEPENDENT VARIABLE DELCP

X/DE          .0580   .2320   .4060   .5800   .7540   .9280

  Z/DE
   -.502      .0000
   -.482              .0000
   -.449                      .0000
   -.397                              .0000
   -.336                                       .0000
   -.266                                               .0000
   -.251      .0540
   -.241              .0790
   -.225                      .0870
   -.198                             -.0370
   -.168                                      -.0190
   -.133                                              -.0180
   -.000      .3770   .5300   .4890   .0620
   -.000              .5300   .4890   .0620   -.0140  -.0020
    .133                                               .0010
```

```
                                    CAL T14-053 IA36 02 + T1 + S1 LOWER RH MPS NOZ.            (SUFC06)

MACH  ( 1) =     1.203    BETA  ( 5) =     6.079

 SECTION ( 1)LOWER RH MPS NOZ.              DEPENDENT VARIABLE DELCP

X/DE         .0580    .2320    .4060    .5800    .7540    .9280

  Z/DE
    .168                                         -.0350
    .198                                .0300
    .225                       .3060
    .230                                                  -.0300
    .241              .7500
    .251     .6470
    .266                                                   .0000
    .291                                          .0140
    .336                                          .0000
    .344                                .0290
    .389                       .0820
    .397                                .0000
    .418              .0740
    .434     .0700
    .449                       .0000
    .482              .0000
    .502     .0000
```

REPRODUCIBILITY OF THE
ORIGINAL PAGE IS POOR

```
                              CAL T14-053 IA36 02 + T1 + S1 LOWER RH MPS NOZ.              (SUFC07)    ( 18 DEC 73  )

              REFERENCE DATA                                                                   PARAMETRIC DATA

SREF  =    49.4000 SQ.FT.   XMRP  =   158.0000 INCHES                          BETA   =      .000  POWER  =     1.000
LREF  =    90.7000 INCHES   YMRP  =      .0000 INCHES                          CPR    =    28.310  SRMPR  =     2.020
BREF  =    90.7000 INCHES   ZMRP  =      .0000 INCHES                          GP1    =    11.000  GY1    =    -9.000
SCALE =      .0190 SCALE                                                       GP2    =      .000  GY2    =    -9.000
                                                                               GP3    =      .000  GY3    =    -9.000

MACH  ( 1) =    1.199   ALPHA ( 1) =   -8.108

 SECTION ( 1)LOWER RH MPS NOZ.            DEPENDENT VARIABLE DELCP

X/DE        .0580    .2320    .4060    .5800    .7540    .9280

 Z/DE
  -.502     .0000
  -.482              .0000
  -.449                       .0000
  -.397                                .0000
  -.336                                         .0000
  -.266                                                  .0000
  -.251    -.0050
  -.241              .0440
  -.225                       .0490
  -.198                                .0030
  -.169                                        -.0140
  -.133                                                  .0160
  -.000     .4630    .5320    .4420    .0850
  -.000              .5320    .4420    .0850    .0230    .0220
   .133                                                  .0130
   .168                                         .0050
   .198                                .0460
   .225                       .3450
   .230                                                 -.0190
   .241              .8460
   .251     .6350
   .266                                                  .0000
   .231                                         .0350
   .336                                         .0000
   .344                                .0070
   .389                       .0630
   .397                                .0000
   .418               0840
   .434     .2610
   .449                       .0000
   .482              .0000
   .502     .0000
```

```
                              CAL T14-053 IA36 02 + T1 + S1 LOWER RH MPS NOZ.             (SUFC07)

MACH  ( 1) =    1.198   ALPHA ( 2) =   -4.075

 SECTION ( 1)LOWER RH MPS NOZ.                   DEPENDENT VARIABLE DELCP

X/DE        .0580   .2320   .4060   .5800   .7540   .9280

  Z/DE
   -.502    .0000
   -.482            .0000
   -.449                    .0000
   -.397                            .0000
   -.336                                    .0000
   -.266                                            .0000
   -.251    .0100
   -.241            .0360
   -.225                   -.0220
   -.198                            .0100
   -.168                                   -.0150
   -.133                                            .0130
   -.000    .4480   .4860   .3270   .0460
   -.000            .4860   .3270   .0460   .0390   .0120
    .133                                            .0040
    .168                                    .0020
    .198                            .0240
    .225                    .1880
    .230                                           -.0270
    .241            .6780
    .251    .6200
    .266                                            .0000
    .291                                    .0370
    .336                                    .0000
    .344                            .0190
    .389                    .0460
    .397                            .0000
    .416            .0370
    .434    .0890
    .449                    .0000
    .482            .0000
    .502    .0000

MACH  ( 1) =    1.197   ALPHA ( 3) =    -.023

 SECTION ( 1)LOWER RH MPS NOZ.                   DEPENDENT VARIABLE DELCP

X/DE        .0580   .2320   .4060   .5800   .7540   .9280

  Z/DE
   -.502    .0000
   -.482            .0000
   -.449                    .0000
   -.397                            .0000
   -.336                                    .0000
```

```
DATE 05 NOV 75            TABULATED DATA FOR CAL T14-053 (IA35)

                              CAL T14-053 IA35 O2 + T1 + S1 LOWER RH MPS NOZ.            (SUFC07)

MACH  ( 1) =    1.197    ALPHA ( 3) =    -.023

 SECTION ( 1)LOWER RH MPS NOZ.                    DEPENDENT VARIABLE DELCP

X/DE          .0580    .2320    .4060    .5800    .7540    .9280

  Z/DE
   -.266                                                    .0000
   -.251      .0160
   -.241               .0370
   -.225                       -.0420
   -.198                                 .0090
   -.168                                         -.0140
   -.133                                                    .0190
   -.000      .4380    .4480    .2430    .0400
   -.000               .4480    .2430    .0400    .0300   -.0110
    .133                                                   -.0090
    .168                                          .0040
    .198                                 .0190
    .225                        .1810
    .230                                                   -.0130
    .241               .5550
    .251      .5180
    .265                                                    .0000
    .291                                          .0270
    .336                                          .0000
    .344                                 .0270
    .389                        .0410
    .397                                 .0000
    .418               .0240
    .434      .0180
    .449                        .0000
    .462               .0000
    .502      .0000
MACH  ( 1) =    1.196    ALPHA ( 4) =    4.017

 SECTION ( 1)LOWER RH MPS NOZ.                    DEPENDENT VARIABLE DELCP

X/DE          .0580    .2320    .4060    .5800    .7540    .9280

  Z/DE
   -.502      .0000
   -.482               .0000
   -.449                        .0000
   -.397                                 .0000
   -.336                                          .0000
   -.266                                                    .0000
   -.251     -.0100
   -.241               .0030
   -.225                        .0000
   -.199                                 .0460
```

CAL T14-053 IA36 02 + T1 + S1 LOWER RH MPS NOZ. (SUFC07)

MACH (1) = 1.196 ALPHA (4) = 4.017

SECTION (1)LOWEF RH MPS NOZ. DEPENDENT VARIABLE DELCP

X/DE	.0580	.2320	.4060	.5800	.7540	.9290
Z/DE						
-.168					.0210	
-.133						.0050
-.000	.4810	.4450	.1930	.0000		
-.000		.4450	.1930	.0000	.0000	.0310
.133						-.0010
.168					.0000	
.198				.0030		
.225			.1440			
.230						.0000
.241		.3220				
.251	.4340					
.266						.0000
.291					.0120	
.336					.0000	
.344				.0250		
.389			.0000			
.397				.0000		
.418		.0520				
.434	.0680					
.449			.0000			
.482		.0000				
.502	.0000					

MACH (1) = 1.200 ALPHA (5) = 6.028

SECTION (1)LOWER RH MPS NOZ. DEPENDENT VARIABLE DELCP

X/DE	.0580	.2320	.4060	.5800	.7540	.9280
Z/DE						
-.502	.0000					
-.482		.0000				
-.449			.0000			
-.397				.0000		
-.336					.0000	
-.266						.0000
-.251	-.0180					
-.241		.0570				
-.225			.0000			
-.198				.0380		
-.168					-.0030	
-.133						-.0030
-.000	.4560	.3960	.1870	.0000		
-.000		.3960	.1870	.0000	.0000	.0240
.133						.0150

```
DATE 05 NOV 75          TABULATED DATA FOR CAL T14-053 (IA36)                                          PAGE 424

                                 CAL T14-053 IA36 02 + T1 + S1 LOWER RH MPS NOZ.              (SUFC07)

MACH  ( 1) =    1.200    ALPHA ( 5) =    6.028

 SECTION ( 1)LOWER RH MPS NOZ.             DEPENDENT VARIABLE DELCP

X/DE          .0580   .2320   .4060   .5800   .7540   .9280

  Z/DE
    .168                                       .0000
    .198                               .0270
    .225                       .1030
    .230                                               .0000
    .241               .3050
    .251      .3600
    .266                                               .0000
    .291                                       .0190
    .336                                       .0000
    .344                               .0000
    .383                       .0000
    .397                               .0000
    .418               .0470
    .434      .0400
    .449                       .0000
    .482               .0000
    .502      .0000
```

```
DATE 05 NOV 75            TABULATED DATA FOR CAL T14-053 (IA36)                                              PAGE  425

                                      CAL T14-053 IA36 02 + T1 + S1 LOWER RH MPS NOZ.               (SUFC08)   ( 18 DEC 73  )

                 REFERENCE DATA                                                                          PARAMETRIC DATA

SREF  =     49.4000 SQ.FT.   XMRP  =   158.0000 INCHES                              ALPHA  =       .000   POWER  =     1.000
LREF  =     90.7000 INCHES   YMRP  =      .0000 INCHES                              OPR    =     28.310   SRMPR  =     2.020
BREF  =     90.7000 INCHES   ZMRP  =      .0000 INCHES                              GP1    =     11.000   GY1    =    -9.000
SCALE =       .0190 SCALE                                                           GP2    =       .000   GY2    =    -9.000
                                                                                    GP3    =       .000   GY3    =    -9.000

MACH  ( 1) =     1.194    BETA  ( 1) =    -6.074

 SECTION ( 1)LOWER RH MPS NOZ.            DEPENDENT VARIABLE DELCP

X/DE         .0580   .2320   .4060   .5800   .7540   .9280

  Z/DE
   -.502     .0000
   -.482             .0000
   -.449                     .0000
   -.397                             .0000
   -.336                                     .0000
   -.266                                             .0000
   -.251    -.0240
   -.241             .0340
   -.225                    -.0170
   -.198                             .0190
   -.168                                    -.0070
   -.133                                             .0240
   -.000     .3510   .3380   .1620   .0760
   -.000             .3380   .1620   .0760   .0270   .0180
    .133                                             .0020
    .168                                     .0410
    .198                             .0570
    .225                     .1160
    .230                                            -.0110
    .241             .4030
    .251     .4970
    .266                                             .0000
    .291                                     .0410
    .336                                     .0000
    .344                             .0290
    .389                     .0750
    .397                             .0000
    .418             .0410
    .434    -.0090
    .449                     .0000
    .482             .0000
    .502     .0000
```

```
                    CAL T14-053 IA36 O2 + T1 + S1 LOWER RH MPS NOZ.            (SUFC08)

MACH  ( 1) =    1.194   BETA  ( 2) =   -3.044

 SECTION ( 1)LOWER RH MPS NOZ.            DEPENDENT VARIABLE DELCP

X/DE         .0580  .2320  .4060  .5800  .7540  .9280

  Z/DE
   -.502     .0000
   -.482            .0000
   -.449                   .0000
   -.397                          .0000
   -.336                                 .0000
   -.266                                        .0000
   -.251    -.0100
   -.241            .0210
   -.225                   .0000
   -.198                          .0360
   -.168                                 .0040
   -.133                                        .0050
   -.000     .3670  .4230  .1770  .0000
   -.000            .4230  .1770  .0000  .0000  .0280
    .133                                       -.0160
    .163                                 .0000
    .198                          .0420
    .225                   .1860
    .230                                        .0000
    .241            .4440
    .251     .4680
    .266                                        .0000
    .291                                 .0230
    .336                                 .0000
    .344                          .0420
    .389                   .0000
    .397                          .0000
    .418            .0480
    .434     .0450
    .449                   .0000
    .482            .0000
    .502     .0000
MACH  ( 1) =    1.199   BETA  ( 3) =     .000

 SECTION ( 1)LOWER RH MPS NOZ.            DEPENDENT VARIABLE DELCP

X/DE         .0580  .2320  .4060  .5800  .7540  .9280

  Z/DE
   -.502     .0000
   -.482            .0000
   -.449                   .0000
   -.397                          .0000
   -.336                                 .0000
```

```
                                 CAL T14-053 IA36 02 + T1 + S1 LOWER RH MPS NOZ.                (SUFC08)
MACH  ( 1) =    1.199    BETA  ( 3) =     .000

 SECTION ( 1)LOWER RH MPS NOZ.              DEPENDENT VARIABLE DELCP

X/DE         .0580   .2320   .4060   .5800   .7540   .9280

  Z/DE
   -.266                                              .0000
   -.251    .0180
   -.241            .0410
   -.225                   -.0130
   -.198                           -.0130
   -.168                                   -.0270
   -.133                                              .0070
   -.000    .3900   .4590   .2570   .0230
   -.000            .4590   .2570   .0230  -.0030   -.0020
    .133                                             -.0210
    .168                                    .0190
    .198                            .0370
    .225                    .1490
    .230                                             -.0200
    .241            .4890
    .251    .4810
    .266                                              .0000
    .291                                    .0390
    .336                                    .0000
    .344                            .0240
    .389                    .0130
    .397                            .0000
    .418            .0210
    .434    .0070
    .449                    .0000
    .482            .0000
    .502    .0000
MACH  ( 1) =    1.195    BETA  ( 4) =     3.049

 SECTION ( 1)LOWER RH MPS NOZ.              DEPENDENT VARIABLE DELCP

X/DE         .0580   .2320   .4060   .5800   .7540   .9280

  Z/DE
   -.502    .0000
   -.482            .0000
   -.449                    .0000
   -.397                            .0000
   -.336                                    .0000
   -.266                                             .0000
   -.251   -.0060
   -.241            .0060
   -.225                    .0220
   -.198                            .0100
```

```
                              CAL T14-053 IA36 O2 + T1 + S1 LOWER RH MPS NOZ.          (SUFC08)

MACH  ( 1) =    1.195    BETA  ( 4) =    3.049

 SECTION ( 1)LOWER RH MPS NOZ.               DEPENDENT VARIABLE DELCP

X/DE        .0580   .2320   .4060   .5800   .7540   .9280

  Z/DE
   -.168                                    .0110
   -.133                                            .0150
   -.000    .4540   .5180   .4920   .0910
   -.000            .5180   .4920   .0910   .0110   .0160
    .133                                           -.0220
    .168                                    .0380
    .193                            .0380
    .225                    .3000
    .230                                            .0880
    .241            .6910
    .251    .6150
    .266                                            .0000
    .291                                   -.0500
    .335                                    .0000
    .344                            .0320
    .383                    .0570
    .397                            .0000
    .418            .1040
    .434    .1780
    .449                    .0000
    .482            .0000
    .502    .0000

MACH  ( 1) =    1.197    BETA  ( 5) =    6.079

 SECTION ( 1)LOWER RH MPS NOZ.               DEPENDENT VARIABLE DELCP

X/DE        .0580   .2320   .4060   .5800   .7540   .9280

  Z/DE
   -.502    .0000
   -.482            .0000
   -.449                    .0000
   -.397                            .0000
   -.335                                    .0000
   -.266                                            .0000
   -.251    .0110
   -.241            .0330
   -.225                    .0240
   -.193                            .0070
   -.168                                    .0030
   -.133                                            .0210
   -.000    .4750   .5590   .4840   .1350
   -.000            .5590   .4840   .1330   .0100   .0290
    .133                                            .0130
```

```
DATE 05 NOV 75              TABULATED DATA FOR CAL T14-053 (IA36)                                    PAGE  429
                                   CAL T14-053 IA36 02 + T1 + S1 LOWER RH MPS NOZ.                (SUFC08)
MACH  ( 1) =    1.197    BETA  ( 5) =    6.079
 SECTION ( 1)LOWER RH MPS NOZ.                   DEPENDENT VARIABLE DELCP
X/DE         .0580   .2320   .4060   .5800   .7540   .9280
  Z/DE
    .168                                     -.0010
    .198                             .0470
    .225                     .3480
    .230                                             .0010
    .241             .7130
    .251     .6140
    .266                                             .0000
    .291                                      .0190
    .336                                      .0000
    .344                             .0280
    .389                     .0960
     397                             .0000
    .418             .0880
    .434     .1340
    .449                     .0000
    .482             .0000
    .502     .0000
```

```
                                         CAL T14-053 IA35 02 + T1 + S1 UPPER MPS NOZZLE         (AUFA01)   ( 17 NOV 73  )

                 REFERENCE DATA                                                                     PARAMETRIC DATA

SREF  =     49.4000 SQ.FT.   XMRP  =   158.0000 INCHES                               BETA   =      .000  POWER  =      .000
LREF  =     90.7000 INCHES   YMRP  =      .0000 INCHES                               GP1    =    11.000  GY1    =    -9.000
BREF  =     90.7000 INCHES   ZMRP  =      .0000 INCHES                               GP2    =      .000  GY2    =    -9.000
SCALE =       .0190 SCALE                                                            GP3    =      .000  GY3    =      .000

 MACH NO.       .901                                                           SECTION LIMITS     .000 /   1.000
                            SECTION( 1)    UPPER MPS NOZZLE

                                                DCN/DX

 X/DE       GRADIENT  ALPHA          -8.0880    -4.0490      .0130     4.0050     6.0060

    .058      .0534                  -.2331     -.2164     -.1743     -.1598     -.1434
    .232      .0787                  -.3352     -.3185     -.2699     -.2703     -.2600
    .406      .0552                  -.2483     -.2234     -.1987     -.1983     -.1906
    .580      .0177                  -.1124     -.0718     -.0609     -.0449     -.0446
    .754     -.0024                   .0113      .0037      .0109      .0044      .0089
    .928     -.0003                   .0048      .0010      .0034      .0004      .0052
```

```
                                        CAL T14-053 IA36 O2 + T1 + S1 UPPER MPS NOZZLE                  (AUFA01)    ( 17 NOV 73  )
                REFERENCE DATA                                                                                PARAMETRIC DATA

SREF  =    49.4000 SQ.FT.   XMRP  =   158.0000 INCHES
LREF  =    90.7000 INCHES   YMRP  =      .0000 INCHES                      BETA    =      .000   POWER   =      .000
BREF  =    90.7000 INCHES   ZMRP  =      .0000 INCHES                      GP1     =    11.000   GY1     =    -9.000
SCALE =      .0190 SCALE                                                   GP2     =      .000   GY2     =    -9.000
                                                                           GP3     =      .000   GY3     =      .000
 MACH NO.       .901
                        SECTION( 1)    UPPER MPS NOZZLE                 SECTION LIMITS      .000 /    1.000
                                                    DCNMOX
X/DE       GRADIENT  ALPHA          -8.0880     -4.0490       .0130      4.0050      6.0060

  .058      -.0900                   .3925       .3644       .2936       .2692       .2416
  .232      -.1188                   .5062       .4810       .4075       .4081       .3926
  .406      -.0737                   .3317       .2984       .2654       .2649       .2546
   580      -.0206                   .1306       .0834       .0707       .0522       .0518
  .754       .0024                  -.0111      -.0096      -.0108      -.0043      -.0088
  .928       .0002                  -.0039      -.0009      -.0028      -.0003      -.0042
```

```
DATE 05 NOV 75              TABULATED DATA FOR CAL T14-053 (IA36)                                    (AUFAC1)   ( 17 NOV 73 )
                                  CAL T14-053 IA36 02 + T1 + S1 UPPER MPS NOZZLE
                                                                                                 PARAMETRIC DATA
                 REFERENCE DATA
                                                                                     BETA    =      .000   POWER   =      .000
 SREF  =    49.4000 SQ.FT.   XMRP  =   158.0000 INCHES                               GP1     =    11.000   GY1     =    -9.000
 LREF  =    90.7000 INCHES   YMRP  =      .0000 INCHES                               GP2     =      .000   GY2     =    -9.000
 BREF  =    90.7000 INCHES   ZMRP  =      .0000 INCHES                               GP3     =      .000   GY3     =      .000
 SCALE =      .0190 SCALE

                                                                                  SECTION LIMITS     .000 /   1.000
  MACH NO.       .601        SECTION( 1)   UPPER MPS NOZZLE

                                                DCY/DX

  X/DE        GRADIENT  ALPHA         -8.0880     -4.0490      .0130     4.0050     5.0060

    .058        .0346                 -.1499      -.1400     -.1140     -.0990     -.1001
    .232       -.0207                  .0783       .0840      .0635      .0502      .0384
    .406        .0135                 -.0576      -.0549     -.0454     -.0354     -.0379
    .580        .0050                 -.0257      -.0233     -.0245     -.0160     -.0169
    .754        .0013                 -.0083      -.0054     -.0027     -.0027     -.0005
    .928        .0005                 -.0003      -.0022      .0018      .0011      .0008
```

```
                                 CAL T14-053 IA36 02 ^ T1 + S1 UPPER MPS NOZZLE                (AUFA01)   ( 17 NOV 73  )

                REFERENCE DATA                                                                  PARAMETRIC DATA

SREF  =     49.4000 SQ.FT.   XMRP  =   158.0000 INCHES
                                                                               BETA   =      .000   POWER   =      .000
LREF  =     90.7000 INCHES   YMRP  =      .0000 INCHES
                                                                               GP1    =    11.000   GY1     =    -9.000
BREF  =     90.7000 INCHES   ZMRP  =      .0000 INCHES
                                                                               GP2    =      .000   GY2     =    -9.000
SCALE =       .0190 SCALE
                                                                               GP3    =      .000   GY3     =      .000

 MACH NO.      .901
                           SECTION( 1)    UPPER MPS NOZZLE                   SECTION LIMITS     .000 /    1.000

                                               DCYNDX

 X/DE       GRADIENT  ALPHA      -8.0880    -4.0490      .0130     4.0050     6.0060

    .058     -.0582                .2524      .2358      .1921      .1666      .1686
    .232      .0313              -.1182     -.1258     -.0958     -.0909     -.0580
    .406     -.0181                .0770      .0733      .0606      .0487      .0506
    .580     -.0067                .0298      .0271      .0285      .0186      .0196
    .754     -.0013                .0082      .0053      .0027      .0027      .0005
    .928     -.0004                .0002      .0018     -.0014     -.0009     -.0007
```

```
DATE 05 NOV 75           TABULATED DATA FOR CAL T14-053 (IA36)                                                    PAGE  434

                                   CAL T14-053 IA36 02 + T1 + S1 UPPER MPS NOZZLE              (AUFA02)   ( 17 NOV 73  )

                 REFERENCE DATA                                                                  PARAMETRIC DATA

SREF  =    49.4000 SQ.FT.   XMRP  =   158.0000 INCHES                          ALPHA  =      .000  POWER  =      .000
LREF  =    90.7000 INCHES   YMRP  =      .0000 INCHES                          GP1    =    11.000  GY1    =    -9.000
BREF  =    90.7000 INCHES   ZMRP  =      .0000 INCHES                          GP2    =      .000  GY2    =    -9.000
SCALE =      .0190 SCALE                                                       GP3    =      .000  GY3    =      .000

 MACH NO.      .901                                                        SECTION LIMITS     .000 /   1.000
                          SECTION( 1)    UPPER MPS NOZZLE

                                                      DCN/DX

 X/DE      GRADIENT  BETA        -6.0790    -3.0490      .0000     3.0510     6.0890

   .058      .0328               -.0733     -.1001     -.1779     -.2156     -.3066
   .232      .0754               -.1516     -.2299     -.2737     -.2824     -.3460
   .406      .0532               -.0476     -.1621     -.2113     -.1522     -.1926
   .580      .0028               -.0096     -.0084     -.0571     -.1532     -.1780
   .754     -.0004               -.0011      .0013      .0061      .0154     -.0246
   .928     -.0005                .0026      .0015      .0027      .0085      .0110
```

```
DATE 05 NOV 75           TABULATED DATA FOR CAL T14-053 (IA36)                                          PAGE  435

                                   CAL T14-053 IA36 02 + T1 + S1 UPPER MPS NOZZLE             (AUFA02)   ( 17 NOV 73  )

              REFERENCE DATA                                                                      PARAMETRIC DATA

SREF  =    49.4000 SQ.FT.   XMRP  =   158.0000 INCHES
                                                                                   ALPHA  =      .000  POWER  =      .000
LREF  =    90.7000 INCHES   YMRP  =      .0000 INCHES
                                                                                   GP1    =    11.000  GY1    =    -9.000
BREF  =    90.7000 INCHES   ZMRP  =      .0000 INCHES
                                                                                   GP2    =      .000  GY2    =    -9.000
SCALE =      .0190 SCALE
                                                                                   GP3    =      .000  GY3    =      .000

 MACH NO.      .901
                       SECTION( 1)   UPPER MPS NOZZLE                            SECTION LIMITS     .000 /   1.000

                                                DCNMDX

 X/DE      GRADIENT  BETA        -6.0790     -3.0490      .0000      3.0510      6.0890

    .058    -.0553                 .1235       .1686      .2996       .3631       .5163
    .232    -.1138                 .2290       .3471      .4133       .4263       .5224
    .406    -.0710                 .0636       .2166      .2823       .2034       .2574
    .580    -.0032                 .0111       .0098      .0664       .1780       .2069
    .754     .0004                 .0011      -.0013     -.0060      -.0152       .0243
    .928     .0004                -.0021      -.0013     -.0022      -.0069      -.0090
```

```
DATE 05 NOV 75           TABULATED DATA FOR CAL T14-053 (IA36)                                              PAGE  438

                                 CAL T14-053 IA36 02 + T1 + S1 UPPER MPS NOZZLE                (AUFA02)   ( 17 NOV 73  )

               REFERENCE DATA                                                                       PARAMETRIC DATA

SPREF  =    49.4000 SQ.FT.   XMRP  =   158.0000 INCHES
                                                                                    ALPHA  =      .000  POWER  =       .000
LREF   =    90.7000 INCHES   YMRP  =      .0000 INCHES
                                                                                    GP1    =    11.000  GY1    =     -9.000
BREF   =    90.7000 INCHES   ZMRP  =      .0000 INCHES
                                                                                    GP2    =      .000  GY2    =     -9.000
SCALE  =      .0130 SCALE
                                                                                    GP3    =      .000  GY3    =       .000

 MACH NO.      .901
                         SECTION( 1)   UPPER MPS NOZZLE                          SECTION LIMITS    .000 /   1.000

                                            DCY/DX

 X/DE      GRADIENT  BETA        -6.0790    -3.0490     .0000     3.0510     6.0890

   .058      .0221               -.0290     -.0674    -.1143    -.1406     -.2143
   .232     -.0059                .0385      .0180     .0705    -.0074     -.1733
   .406     -.0041                .0353      .0125    -.0339    -.0572     -.1165
   .580      .0009                .0051     -.0026    -.0220    -.0360     -.0489
   .754      .0001                .0010     -.0002    -.0048    -.0075     -.0020
   .928      .0003                .0020     -.0009     .0005    -.0006      .0020
```

```
DATE 05 NOV 75          TABULATED DATA FOR CAL T14-053 (IA36)                                          PAGE  437

                                  CAL T14-053 IA36 02 + T1 + S1 UPPER MPS NOZZLE              (AUFA02)   ( 17 NOV 73  )

              REFERENCE DATA                                                                   PARAMETRIC DATA

SREF  =    49.4000 SQ.FT.  XMRP  =   158.0000 INCHES
                                                                        ALPHA  =      .000  POWER  =      .000
LREF  =    90.7000 INCHES  YMRP  =      .0000 INCHES
                                                                        GP1    =    11.000  GY1    =    -9.000
BREF  =    90.7000 INCHES  ZMRP  =      .0000 INCHES
                                                                        GP2    =      .000  GY2    =    -9.000
SCALE =      .0190 SCALE
                                                                        GP3    =      .000  GY3    =      .000

 MACH NO.      .901
                       SECTION( 1)    UPPER MPS NOZZLE                SECTION LIMITS     .000 /   1.000

                                            DCYNDX

X/DE      GRADIENT  BETA       -6.0790    -3.0490      .0000     3.0510     6.0890

  .058    -.0372                 .0488      .1135      .1925      .2367      .3608
  .232     .0089               -.0581     -.0272     -.1065      .0112      .2616
  .406     .0055               -.0472     -.0167      .0453      .0764      .1556
  .580    -.0010               -.0059      .0031      .0256      .0419      .0569
  .754    -.0001               -.0010      .0002      .0048      .0074      .0020
  .928    -.0002               -.0016      .0007     -.0004      .0005     -.0016
```

```
                                   CAL T14-053 IA36 O2 + T1 + S1 UPPER MPS NOZZLE              (AUFA03)   ( 17 NOV 73 )

                REFERENCE DATA                                                                    PARAMETRIC DATA

SREF  =    49.4000 SQ.FT.   XMRP  =   158.0000 INCHES
                                                                                 BETA   =      .000   POWER  =     1.000
LREF  =    90.7000 INCHES   YMRP  =      .0000 INCHES
                                                                                 OPR    =    36.200   SRMPR  =     2.330
BREF  =    90.7000 INCHES   ZMRP  =      .0000 INCHES
                                                                                 GP1    =    11.000   GY1    =    -9.000
SCALE =      .0190 SCALE
                                                                                 GP2    =      .000   GY2    =    -9.000
                                                                                 GP3    =      .000   GY3    =    -9.000

 MACH NO.       .897
                         SECTION( 1)    UPPER MPS NOZZLE                       SECTION LIMITS     .000 /   1.000

                                             DCN/DX

 X/DE       GRADIENT  ALPHA        -8.0880    -4.0380      .0010     4.0260     6.0210

    .058      .0360                -.2050     -.1455     -.1015     -.0887     -.0815
    .232      .0792                -.4069     -.3197     -.2834     -.2911     -.2936
    .406      .0627                -.3039     -.2532     -.2269     -.3583     -.2257
    .580      .0368                -.2161     -.1485     -.1214     -.0688     -.0673
    .754     -.0017                 .0073      .0069      .0007      .0002     -.0033
    .928     -.0015                 .0042      .0059      .0039     -.0017     -.0024
```

```
DATE 05 NOV 75            TABULATED DATA FOR CAL T14-053 (IA36)                                          PAGE  439

                                  CAL T14-053 IA36 02 + T1 + S1 UPPER MPS NOZZLE               (AUFA03)   ( 17 NOV 73  )

             REFERENCE DATA                                                                       PARAMETRIC DATA

SREF  =     49.4000 SQ.FT.   XMRP  =   158.0000 INCHES
                                                                          BETA   =      .000  POWER  =      1.000
LREF  =     90.7000 INCHES   YMRP  =      .0000 INCHES
                                                                          OPR    =    36.200  SRMPR  =      2.330
BREF  =     90.7000 INCHES   ZMRP  =      .0000 INCHES
                                                                          GP1    =    11.000  GY1    =     -9.000
SCALE =       .0190 SCALE
                                                                          GP2    =      .000  GY2    =     -9.000
                                                                          GP3    =      .000  GY3    =     -9.000

 MACH NO.       .897
                     SECTION( 1)   UPPER MPS NOZZLE                  SECTION LIMITS     .000 /   1.000

                                           DCNMDX

 X/DE      GRADIENT  ALPHA      -8.0880    -4.0380      .0010     4.0260     6.0210

   .058     -.0607                .3453      .2450      .1710      .1494      .1372
   .232     -.1196                .6144      .4828      .4280      .4395      .4434
   .406     -.0838                .4060      .3383      .3032      .3013      .3015
   .580     -.0427                .2511      .1726      .1410      .0799      .0782
   .754      .0017               -.0072     -.0068     -.0007     -.0002      .0033
   .928      .0012               -.0034     -.0048     -.0031      .0014      .0020
```

REPRODUCIBILITY OF THE
ORIGINAL PAGE IS POOR

```
DATE 05 NOV 75            TABULATED DATA FOR CAL T14-053 (IA36)

                                   CAL T14-053 IA36 02 + T1 + S1 UPPER MPS NOZZLE         (AUFA03)    ( 17 NOV 73  )

                REFERENCE DATA                                                           PARAMETRIC DATA

SPEF  =    49.4000 SQ.FT.   XMRP  =   158.0000 INCHES                      BETA   =      .000   POWER  =     1.000
LREF  =    90.7000 INCHES   YMRP  =      .0000 INCHES                      OPR    =    36.200   SPMPR  =     2.330
BREF  =    90.7000 INCHES   ZMRP  =      .0000 INCHES                      GP1    =    11.000   GY1    =    -9.000
SCALE =      .0190 SCALE                                                   GP2    =      .000   GY2    =    -9.000
                                                                           GP3    =      .000   GY3    =    -9.000

 MACH NO.      .897                                                       SECTION LIMITS    .000 /   1.000
                         SECTION( 1)    UPPER MPS NOZZLE

                                              DCY/DX

 X/DE      GRADIENT  ALPHA        -8.0880    -4.0380     .0010     4.0260    6.0210

   .058     .0635                 -.2581     -.2562    -.2100    -.1874    -.1731
   .232    -.0169                  .1181      .0681     .0814     .0882     .0983
   .406     .0124                 -.0311     -.0502    -.0280    -.0248    -.0063
   .580     .0148                 -.0715     -.0597    -.0514    -.0289    -.0266
   .754     .0002                 -.0071     -.0007     .0024     .0009    -.0028
   .928    -.0006                 -.0002      .0025     .0037     .0068     .0037
```

```
DATE 05 NOV 75          TABULATED DATA FOR CAL T14-053 (IA36)                                               PAGE  441

                              CAL T14-053 IA36 02 - T1 + S1 UPPER MPS NOZZLE                (AUFA03)    ( 17 NOV 73  )
               REFERENCE DATA                                                                     PARAMETRIC DATA

SREF  =   49.4000 SQ.FT.   XMRP  =   158.0000 INCHES
LREF  =   90.7000 INCHES   YMRP  =      .0000 INCHES                          BETA   =      .000  POWER  =    1.000
BREF  =   90.7000 INCHES   ZMRP  =      .0000 INCHES                          OPR    =    36.200  SRMPR  =    2.330
SCALE =     .0190 SCALE                                                       GP1    =    11.000  GY1    =   -9.000
                                                                              GP2    =      .000  GY2    =   -9.000
                                                                              GP3    =      .000  GY3    =   -9.000
 MACH NO.      .897
                      SECTION( 1)    UPPER MPS NOZZLE                        SECTION LIMITS      .000 /    1.000

                                                DCYNDX
 X/DE       GRADIENT  ALPHA       -8.0880    -4.0380      .0010     4.0260     6.0210

   .058      -.1068                 .4346      .4315      .3537      .3156      .2915
   .232       .0255               -.1783     -.1028     -.1230     -.1331     -.1484
   .406      -.0166                 .0416      .0671      .0374      .0331      .0084
   .580      -.0172                 .0830      .0693      .0597      .0336      .0310
   .754      -.0002                 .0070      .00[illegible]  -.0023     -.0009      .0028
   .928       .0005                 .0001     -.0020     -.0030     -.0055     -.0030
```

```
DATE 05 NOV 75          TABULATED DATA FOR CAL T14-053 (IA36)                                          PAGE  442

                             CAL T14-053 IA36 02 + T1 + S1 UPPER MPS NOZZLE                 (AUFA04)   ( 17 NOV 73  )

             REFERENCE DATA                                                                   PARAMETRIC DATA

SREF  =   49.4000 SQ.FT.   XMRP  =   158.0000 INCHES
                                                                          ALPHA  =      .000  POWER  =     1.000
LREF  =   90.7000 INCHES   YMRP  =      .0000 INCHES
                                                                          OPR    =    36.200  SRMPR  =     2.330
BREF  =   90.7000 INCHES   ZMRP  =      .0000 INCHES
                                                                          GP1    =    11.000  GY1    =    -9.000
SCALE =     .0190 SCALE
                                                                          GP2    =      .000  GY2    =    -9.000
                                                                          GP3    =      .000  GY3    =    -9.000

 MACH NO.      .899
                       SECTION( 1)   UPPER MPS NOZZLE                     SECTION LIMITS     .000 /   1.000

                                          DCN/DX

 X/DE      GRADIENT  BETA       -6.0780    -3.0490      .0000     3.0510     6.0880

   .058     .0107               -.0306     -.0325     -.0993     -.1555     -.2577
   .232     .0819               -.2150     -.2498     -.2887     -.2672     -.3647
   .406     .0746               -.0883     -.2274     -.2287     -.1457     -.1910
   .580     .0072               -.0045     -.0219     -.0858     -.1843     -.1962
   .754     .0007               -.0002     -.0022     -.0007      .0141     -.0267
   .928     .0004               -.0033     -.0013      .0002      .0074      .0124
```

```
DATE 05 NOV 75          TABULATED DATA FOR CAL T14-053 (IA36)                                                    PAGE  443

                                   CAL T14-053 IA36 O2 + T1 + S1 UPPER MPS NOZZLE                  (AUFA04)   ( 17 NOV 73  )
                 REFERENCE DATA                                                                          PARAMETRIC DATA
SREF  =    49.4000 SQ.FT.   XMRP  =   158.0000 INCHES
LREF  =    90.7000 INCHES   YMRP  =      .0000 INCHES                                  ALPHA  =      .000  POWER  =     1.000
BREF  =    90.7000 INCHES   ZMRP  =      .0000 INCHES                                  OPR    =    36.200  SRMPR  =     2.330
SCALE =      .0190 SCALE                                                               GP1    =    11.000  GY1    =    -9.000

                                                                                       GP2    =      .000  GY2    =    -9.000
                                                                                       GP3    =      .000  GY3    =    -9.000
MACH NO.      .899
                      SECTION( 1)    UPPER MPS NOZZLE                                SECTION LIMITS      .000 /    1.000

                                              DCNMDX
X/OC       GRADIENT  BETA          -6.0780     -3.0490      .0000     3.0510     6.0880

  .058      -.0179                   .0515       .0547      .1671      .2619      .4339
  .232      -.1237                   .3247       .3773      .4359      .4034      .5507
  .406      -.0996                   .1180       .3038      .3055      .3622      .4266
  .580      -.0083                   .0053       .0254      .0997      .2141      .2280
  .754      -.0007                   .0002       .0022      .0007     -.0139      .0264
  .928      -.0004                   .0026       .0011     -.0002     -.0061     -.0101
```

```
DATE 05 NOV 75            TABULATED DATA FOR CAL T14-053 (IA36)                                                          PAGE  444

                                        CAL T14-053 IA36 O2 + T1 + S1 UPPER MPS NOZZLE                       (AUFA04)   ( 17 NOV 73  )

                REFERENCE DATA                                                                                   PARAMETRIC DATA

SREF  =    49.4000 SQ.FT.   XMRP  =   158.0000 INCHES
                                                                                     ALPHA  =      .000   POWER   =     1.000
LREF  =    90.7000 INCHES   YMRP  =       .0000 INCHES
                                                                                     OPR    =    36.200   SRMPR   =     2.330
BREF  =    90.7000 INCHES   ZMRP  =       .0000 INCHES
                                                                                     GP1    =    11.000   GY1     =    -9.000
SCALE =       .0190 SCALE
                                                                                     GP2    =      .000   GY2     =    -9.000
                                                                                     GP3    =      .000   GY3     =    -9.000

 MACH NO.       .899
                           SECTION( 1)    UPPER MPS NOZZLE                                       SECTION LIMITS      .000 /    1.000

                                                     DCY/DX

 X/DE        GRADIENT  BETA           -6.0780     -3.0490      .0000      3.0510      6.0880

   .058        .0292                  -.0454      -.0892     -.2066      -.2712      -.3422
   .232       -.0120                   .0349       .0364      .1075      -.0222      -.1671
   .406       -.0129                   .0549       .0394     -.0239      -.0928      -.1524
   .580        .0026                   .0074      -.0079     -.0335      -.0357      -.0502
   .754       -.0011                   .0050       .0033     -.0014      -.0011       .0005
   .928       -.0015                   .0035       .0044      .0057       .0057       .0094
```

CAL T14-053 IA36 O2 + T1 + S1 UPPER MPS NOZZLE (AUFA04) (17 NOV 73)

REFERENCE DATA

SREF = 49.4000 SQ.FT. XMRP = 156.0000 INCHES
LREF = 90.7000 INCHES YMRP = .0000 INCHES
BREF = 90.7000 INCHES ZMRP = .0000 INCHES
SCALE = .0190 SCALE

PARAMETRIC DATA

ALPHA = .000 POWER = 1.000
OPR = 36.200 SRMPR = 2.330
GP1 = 11.000 GY1 = -9.000
GP2 = .000 GY2 = -9.000
GP3 = .000 GY3 = -9.000

MACH NO. .899

SECTION(1) UPPER MPS NOZZLE SECTION LIMITS .000 / 1.000

DCYNDX

X/DE	GRADIENT	BETA -6.0780	-3.0490	.0000	3.0510	6.0880
.058	-.0492	.0765	.1501	.3479	.4567	.5762
.232	.0180	-.0528	-.0550	-.1623	.0335	.2524
.406	.0172	-.0733	-.0526	.0319	.1240	.2036
.580	-.0030	-.0086	.0091	.0389	.0414	.0583
.754	.0011	-.0049	-.0033	.0014	.0010	-.0005
.928	.0012	-.0028	-.0036	-.0046	-.0047	-.0077

```
DATE 05 NOV 75          TABULATED DATA FOR CAL T14-053 (IA36)                                                     PAGE  445
                                  CAL T14-053 IA36 02 + T1 + S1 UPPER MPS NOZZLE                    (AUFA05)   ( 17 NOV 73 )

               REFERENCE DATA                                                                           PARAMETRIC DATA

SREF  =    49.4000 SQ.FT.   XMRP  =   158.0000 INCHES                                    BETA    =       .000   POWER   =       .000
LREF  =    90.7000 INCHES   YMRP  =      .0000 INCHES                                    GP1     =     11.000   GY1     =     -9.000
BREF  =    90.7000 INCHES   ZMRP  =      .0000 INCHES                                    GP2     =       .000   GY2     =     -9.000
SCALE =      .0190 SCALE                                                                 GP3     =       .000   GY3     =       .000

 MACH NO.      1.203                                                                   SECTION LIMITS      .000 /    1.000
                          SECTION( 1)    UPPER MPS NOZZLE

                                                  DCN/DX

 X/DE       GRADIENT  ALPHA         -8.1010    -4.0380     -.0110     4.0030     6.0180

    .058      .0981                  -.4394     -.3962     -.3340     -.2883     -.2815
    .232      .1196                  -.5895     -.4828     -.4232     -.3940     -.4135
    .406      .0963                  -.4454     -.3890     -.3279     -.2828     -.2810
    .580      .0826                  -.4030     -.3334     -.2905     -.2427     -.2035
    .754      .0015                  -.0053     -.0059     -.0082     -.0056     -.0050
    .928     -.0009                   .0070      .0037      .0043      .0059      .0024
```

```
DATE 05 NOV 75          TABULATED DATA FOR CAL T14-053 (IA36)                                              PAGE  447
                                    CAL T14-053 IA36 O2 + T' + S1 UPPER MPS NOZZLE             (AUFA05)   ( 17 NOV 73  )
              REFERENCE DATA                                                                      PARAMETRIC DATA
SREF  =    49.4000 SQ.FT.   XMRP  =   158.0000 INCHES
LREF  =    90.7000 INCHES   YMRP  =      .0000 INCHES                              BETA   =      .000  POWER  =      .000
BREF  =    90.7000 INCHES   ZMRP  =      .0000 INCHES                              GP1    =    11.000  GY1    =    -9.000
SCALE =      .0190 SCALE                                                            GP2    =      .000  GY2    =    -9.000
                                                                                    GP3    =      .000  GY3    =      .000
 MACH NO.     1.203
                        SECTION( 1)    UPPER MPS NOZZLE                            SECTION LIMITS     .000 /   1.000
                                             DCNMDX
X/DE        GRADIENT  ALPHA      -8.1010     -4.0380     -.0110      4.0030      6.0180

   .058      -.1652                 .7400       .6671       .5624       .4856       .4741
   .232      -.1805                 .8902       .7289       .6390       .5949       .6246
   .406      -.1287                 .5950       .5197       .4380       .3778       .3753
   .580      -.0959                 .4683       .3874       .3376       .2820       .2364
   .754      -.0014                 .0052       .0058       .0081       .0056       .0049
   .928       .0007                -.0057      -.0030      -.0035      -.0048      -.0019
```

```
                         CAL T14-053 IA36 02 + T1 + S1 UPPER MPS NOZZLE                 (AUFA05)   ( 17 NOV 73  )

             REFERENCE DATA                                                                    PARAMETRIC DATA

SREF  =    49.4000 SQ.FT.   XMRP  =   158.0000 INCHES
                                                                         BETA    =      .000  POWER   =      .000
LREF  =    90.7000 INCHES   YMRP  =      .0000 INCHES
                                                                         GP1     =    11.000  GY1     =    -9.000
BREF  =    90.7000 INCHES   ZMRP  =      .0000 INCHES
                                                                         GP2     =      .000  GY2     =    -9.000
SCALE =      .0190 SCALE
                                                                         GP3     =      .000  GY3     =      .000

 MACH NO.     1.203
                          SECTION( 1)   UPPER MPS NOZZLE                  SECTION LIMITS    .000 /   1.000

                                                    DCY/DX

 X/DE      GRADIENT  ALPHA      -8.1010    -4.0380     -.0110     4.0030     6.0180

   .058      .0677               -.3218     -.2735     -.2156     -.1624     -.1554
   .232      .0040               -.0756     -.0152      .0321      .0257     -.0023
   .406      .0030               -.0121     -.0364     -.0450     -.1249     -.0921
   .580      .0136               -.0463     -.0551     -.0576     -.0530     -.0478
   .754      .0029               -.0183     -.0116     -.0120     -.0053     -.0044
   .928      .0016               -.0082     -.0063     -.0032     -.0018     -.0040
```

```
DATE 05 NOV 75          TABULATED DATA FOR CAL T14-053 (1A36)                                              PAGE  449

                                     CAL T14-053 IA36 O2 + T1 + S1 UPPER MPS NOZZLE                (AUFA05)   ( 17 NOV 73  )

               REFERENCE DATA                                                                         PARAMETRIC DATA

SREF  =     49.4000 SQ.FT.   XMRP  =   158.0000 INCHES
                                                                                    BETA   =       .000   POWER  =       .000
LREF  =     90.7000 INCHES   YMRP  =      .0000 INCHES
                                                                                    GP1    =     11.000   GY1    =     -9.000
BREF  =     90.7000 INCHES   ZMRP  =      .0000 INCHES
                                                                                    GP2    =       .000   GY2    =     -9.000
SCALE =       .0190 SCALE
                                                                                    GP3    =       .000   GY3    =         00

 MACH NO.      1.203
                         SECTION( 1)    UPPER MPS NOZZLE                        SECTION LIMITS      .000 /    1.000

                                               DCYNDX

X/DE        GRADIENT  ALPHA       -8.1010     -4.0380     -.0110      4.0030      6.0180

    .058     -.1141                 .5419       .4606      .3630       .2735       .2617
    .232     -.0061                 .1142       .0245     -.0485      -.0389       .0035
    .406      .0041                -.0431      -.0167      .0041       .1824       .1339
    .580     -.0159                 .0539       .0640      .0669       .0616       .0555
    .754     -.0028                 .0180       .0114      .0118       .0052       .0044
    .928     -.0013                 .0067       .0051      .0026       .0015       .0033
```

```
DATE 05 NOV 75          TABULATED DATA FOR CAL T14-053 (IA36)                                                     PAGE  450

                                  CAL T14-053 IA36 O2 + T1 + S1 UPPER MPS NOZZLE                    (AUFA06)   ( 17 NOV 73  )

              PEFERENCE DATA                                                                      PARAMETRIC DATA

SREF  =    49.4000 SQ.FT.   XMRP  =   158.0000 INCHES                          ALPHA  =      .000  POWER  =      .000
LPEF  =    90.7000 INCHES   YMRP  =      .0000 INCHES                          GP1    =    11.000  GY1    =    -9.000
BREF  =    90.7000 INCHES    MRP  =      .0000 INCHES                          GP2    =      .000  GY2    =    -9.000
SCALE =      .0190 SCALE                                                       GP3    =      .000  GY3    =      .000

 MACH NO.     1.202
                          SECTION( 1)    UPPER MPS NOZZLE                    SECTION LIMITS     .000 /    1.000

                                            DCN/DX

 X/DE       GRADIENT  BETA          -6.0790    -3.0510      .0000     3.0510     6.0790

   .058       .0803                  -.2192     -.2451     -.2678     -.4167     -.4927
   .232       .1249                  -.3936     -.3812     -.3323     -.4618     -.5585
   .406       .1777                  -.5034     -.5422     -.3549     -.3752     -.4250
   .580       .0678                  -.1192     -.2067     -.3248     -.2267     -.2382
   .754      -.0014                  -.0056      .0043     -.0059     -.0264     -.0995
   .928       .0003                   .0005     -.0010      .0039      .0123      .0133
```

```
DATE 05 NOV 75           TABULATED DATA FOR CAL T14-053 (IA36)                                                       PAGE  451

                                      CAL T14-053 IA36 02 + T1 + S1 UPPER MPS NOZZLE               (AUFA06)   ( 17 NOV 73  )

               REFERENCE DATA                                                                         PARAMETRIC DATA

SREF  =     49.4000 SQ.FT.   XMRP  =   158.0000 INCHES
                                                                                   ALPHA   =      .000   POWER   =      .000
LREF  =     90.7000 INCHES   YMRP  =      .0000 INCHES
                                                                                   GP1     =    11.000   GY1     =    -9.000
BREF  =     90.7000 INCHES   ZMRP  =      .0000 INCHES
                                                                                   GP2     =      .000   GY2     =    -9.000
SCALE =       .0190 SCALE
                                                                                   GP3     =      .000   GY3     =      .000

 MACH NO.     1.202
                         SECTION( 1)    UPPER MPS NOZZLE                          SECTION LIMITS     .000 /   1.000

                                              DCNMDX

 X/DE       GRADIENT  BETA        -6.0790    -3.0510      .0000     3.0510     6.0790

    .058     -.1353                 .3691      .4127      .4510      .7017      .8297
    .232     -.1886                 .5944      .5755      .5018      .6973      .8434
    .406     -.1380                 .3902      .4211      .1637      .2906      .3298
    .580     -.0787                 .1385      .2402      .3774      .2634      .2768
    .754      .0014                 .0055     -.0043      .0058      .0261      .0983
    .928     -.0003                -.0004      .0008     -.0032     -.0100     -.0108
```

```
DATE 05 NOV 75          TABULATED DATA FOR CAL T14-053 (IA36)                                          PAGE  452

                                  CAL T14-053 IA36 O2 + T1 + S1 UPPER MPS NOZZLE               (AUFA06)   ( 17 NOV 73  )

            REFERENCE DATA                                                                        PARAMETRIC DATA

SREF  =    49.4000 SQ.FT.   XMRP  =   158.0000 INCHES
                                                                           ALPHA  =       .000   POWER  =      .000
LREF  =    90.7000 INCHES   YMRP  =      .0000 INCHES
                                                                           GP1    =     11.000   GY1    =    -9.000
BREF  =    90.7000 INCHES   ZMRP  =      .0000 INCHES
                                                                           GP2    =       .000   GY2    =    -9.000
SCALE =      .0190 SCALE
                                                                           GP3    =       .000   GY3    =      .000

 MACH NO.     1.202
                          SECTION( 1)    UPPER MPS NOZZLE                               SECTION LIMITS     .000 /   1.000

                                                  DCY/DX

 X/DE       GRADIENT  BETA          -6.0790    -3.0510      .0000     3.0510     6.0790

   .058      .0191                  -.0172     -.0584     -.1014     -.2600     -.3546
   .232     -.0262                   .0709      .0801      .0759     -.0619     -.1632
   .406     -.0220                   .0422      .0670      .1292     -.0051     -.0276
   .590      .0014                   .0116     -.0044     -.0311     -.0064     -.0748
   .754      .0038                  -.0021     -.0117     -.0124     -.0023     -.0035
   .928      .0003                  -.0015     -.0010     -.0037     -.0022     -.0024
```

```
DATE 05 NOV 75          TABULATED DATA FOR CAL T14-053 (IA36)                                  PAGE  453

                               CAL T14-053 IA36 O2 + T1 + S1 UPPER MPS NOZZLE        (AUFA06)   ( 17 NOV 73  )

            REFERENCE DATA                                                              PARAMETRIC DATA

SREF  =    49.4000 SQ.FT.   XMRP  =   158.0000 INCHES
LREF  =    90.7000 INCHES   YMRP  =      .0000 INCHES                   ALPHA  =     .000   POWER  =     .000
BREF  =    90.7000 INCHES   ZMRP  =      .0000 INCHES                   GP1    =   11.000   GY1    =   -9.000
SCALE =      .0190 SCALE                                                GP2    =     .000   GY2    =   -9.000
                                                                        GP3    =     .000   GY3    =     .000
 MACH NO.     1.202
                         SECTION( 1)    UPPER MPS NOZZLE                SECTION LIMITS     .000 /   1.000

                                            DCYNDX

 X/DE      GRADIENT  BETA          -6.0790    -3.0510      .0000     3.0510     6.0790

   .058     -.0322                   .0290      .0983      .1708      .4378      .5971
   .232      .0396                 -.1071     -.1209     -.1146      .0935      .2495
   .406     -.0138                   .0751      .0420      .0759      .1666      .1966
   .580     -.0017                 -.0135      .0051      .0362      .0772      .0869
   .754     -.0038                   .0020      .0116      .0122      .0023      .0035
   .928     -.0003                   .0013      .0008      .0030      .0018      .0020
```

```
                                       CAL T14-053 IA36 O2 + T1 + S1 UPPER MPS NOZZLE             (AUFA07)    ( 17 NOV 73 )

             REFERENCE DATA                                                                                PARAMETRIC DATA

SREF  =    49.4000 SQ.FT.   XMRP  =   158.0000 INCHES
LREF  =    90.7000 INCHES   YMRP  =      .0000 INCHES                              BETA   =     .000   POWER  =     1.000
BREF  =    90.7000 INCHES   ZMRP  =      .0000 INCHES                              OPR    =   28.310   SRMPR  =     2.020
SCALE =      .0190 SCALE                                                           GP1    =   11.000   GY1    =    -9.000
                                                                                   GP2    =     .000   GY2    =    -9.000
                                                                                   GP3    =     .000   GY3    =    -9.000

 MACH NO.     1.199
                         SECTION( 1)    UPPER MPS NOZZLE                       SECTION LIMITS     .000 /   1.000

                                                  DCN/DX

 X/DE      GRADIENT  ALPHA      -8.1080    -4.0750    -.0230    4.0170    6.0280

   .058      .0953               -.4684     -.3883    -.3111    -.2773    -.2440
   .232      .1197               -.5616     -.4879    -.4077    -.3597    -.3592
   .406      .1214               -.5373     -.4947    -.4605    -.3608    -.3433
   .580      .0784               -.4027     -.3193    -.2740    -.1959    -.1600
   .754      .0001                .0091     -.0003    -.0004     .0072     .0037
   .928     -.0014                .0106      .0055     .0031    -.0006     .0007
```

```
                                        CAL T14-053 IA36 O2 + T1 + S1 UPPER MPS NOZZLE              (AUFA07)   ( 17 NOV 73  )

                  REFERENCE DATA                                                                        PARAMETRIC DATA

SREF  =    49.4000 SQ.FT.   XMRP  =   158.0000 INCHES
                                                                                  BETA    =      .000  POWER   =      1.000
LREF  =    90.7000 INCHES   YMRP  =      .0000 INCHES
                                                                                  OPR     =    28.310  SRMPR   =      2.020
BREF  =    90.7000 INCHES   ZMRP  =      .0000 INCHES
                                                                                  GP1     =    11.000  GY1     =     -9.000
SCALE =      .0190 SCALE
                                                                                  GP2     =      .000  GY2     =     -9.000
                                                                                  GP3     =      .000  GY3     =     -9.000
 MACH NO.     1.199
                         SECTION( 1)    UPPER MPS NOZZLE                       SECTION LIMITS     .000 /    1.000

                                                     DCNMOX

 X/DE       GRADIENT  ALPHA       -8.1080     -4.0750      -.0230      4.0170      6.0280

    .058     -.1605                  .7888       .6539       .5239       .4670       .4109
    .232     -.1808                  .8481       .7367       .6155       .5432       .5424
    .406     -.0868                  .4160       .3537       .2952       .1676       .1440
    .580     -.0911                  .4679       .3711       .3183       .2321       .1959
    .754     -.0001                 -.0090       .0003       .0004      -.0071      -.0037
    .928      .0011                 -.0086      -.0045      -.0025       .0005      -.0206
```

```
DATE 05 NOV 75          TABULATED DATA FOR CAL T14-053 (IA36)

                              CAL T14-053 IA36 02 + T1 + S1 UPPER MPS NOZZLE              (AUFA07)   ( 17 NOV 73  )

                REFERENCE DATA                                                                  PARAMETRIC DATA

SREF  =     49.4000 SQ.FT.   XMRP  =   158.0000 INCHES                  BETA    =      .000   POWER   =     1.000
LREF  =     90.7000 INCHES   YMRP  =      .0000 INCHES                  OPR     =    28.310   SRMPR   =     2.020
BREF  =     90.7000 INCHES   ZMRP  =      .0000 INCHES                  GP1     =    11.000   GY1     =    -9.000
SCALE =       .0190 SCALE                                               GP2     =      .000   GY2     =    -9.000
                                                                        GP3     =      .000   GY3     =    -9.000

 MACH NO.      1.199
                          SECTION( 1)    UPPER MPS NOZZLE                   SECTION LIMITS     .000 /   1.000

                                                DCY/DX

 X/DE       GRADIENT  ALPHA       -8.1080    -4.0750    -.0230     4.0170     6.0280

   .058       .0634               -.3115     -.2582     -.1838     -.1439     -.1419
   .232     -.0092                 .0015      .0374      .0582      .0673      .0451
   .406     -.0171                 .0641      .0698      .0890      .0428      .0780
   .580       .0133               -.0313     -.0541     -.0523     -.0221     -.0184
   .754       .0032               -.0154     -.0130     -.0101     -.0103     -.0086
   .928       .0019               -.0023     -.0076     -.0080     -.0060     -.0076
```

```
DATE 05 NOV 75           TABULATED DATA FOR CAL T14-053 (IA36)                                          PAGE  457

                                   CAL T14-053 I, 46 O2 + T1 + S1 UPPER MPS NOZZLE              (AUFA07)   ( 17 NOV 73  )
                 REFERENCE DATA                                                                     PARAMETRIC DATA

SREF  =    49.4000 SQ.FT.   XMRP  =  158.0000 INCHES
LREF  =    90.7000 INCHES   YMRP  =     .0000 INCHES                         BETA   =     .000  POWER  =    1.000
BREF  =    90.7000 INCHES   ZMRP  =     .0000 INCHES                         OPR    =   28.310  SRMPR  =    2.020
SCALE =      .0190 SCALE                                                     GP1    =   11.000  GY1    =   -9.000
                                                                             GP2    =     .000  GY2    =   -9.000
                                                                             GP3    =     .000  GY3    =   -9.000
 MACH NO.      1.199
                       SECTION( 1)    UPPER MPS NOZZLE                     SECTION LIMITS     .000 /   1.000

                                            DCYNDX
 X/DE      GRADIENT  ALPHA       -8.1080    -4.0750     -.0230     4.0170     6.0280

   .058     -.1067                 .5246      .4347      .3095      .2424      .2390
   .232      .0139               -.0023     -.0565     -.0879     -.1017     -.0681
   .406      .0229               -.0856     -.0932     -.1190     -.0572     -.1043
   .580     -.0154                 .0363      .0629      .0607      .0257      .0214
   .754     -.0032                 .0152      .0128      .0100      .0101      .0085
   .928     -.0015                 .0019      .0062      .0065      .0049      .0062
```

```
DATE 05 NOV 75            TABULATED DATA FOR CAL T14-053 (IA36)                                                          PAGE  459

                                         CAL T14-053 IA36 02 + T1 + S1 UPPER MPS NOZZLE                  (AUFA08)   ( 17 NOV 73  )

                 REFERENCE DATA                                                                               PARAMETRIC DATA

SREF  =    49.4000 SQ.FT.   XMRP  =   158.0000 INCHES
                                                                                          ALPHA          .000    POWER  =      1.000
LREF  =    90.7000 INCHES   YMRP  =       .0000 INCHES
                                                                                          OPR    =     28.310    SRMPR  =      2.020
BREF  =    90.7000 INCHES   ZMRP  =       .0000 INCHES
                                                                                          GP1    =     11.000    GY1    =     -9.000
SCALE =      .0190 SCALE
                                                                                          GP2    =       .000    GY2    =     -9.000
                                                                                          GP3    =       .000    GY3    =     -9.000

 MACH NO.      1.194
                                 SECTION( 1)    UPPER MPS NOZZLE                                   SECTION LIMITS      .000 /    1.000

                                                     DCN/DX

 X/DE       GRADIENT  BETA           -6.0740     -3.0440       .0000      3.0490      6.0790

   .058       .0990                   -.2298      -.3012      -.2959      -.3753      -.4844
   .232       .1147                   -.2976      -.3492      -.3884      -.4266      -.4961
   .406       .0300                    .0029      -.0913       .0203       .0961       .0020
   .580       .0577                   -.1002      -.1755      -.2524      -.2410      -.2131
   .754      -.0030                   -.0060       .0091       .0004      -.0212      -.0852
   .928       .0009                    .0001      -.0028       .0021       .0134       .0199
```

```
DATE 05 NOV 75            TABULATED DATA FOR CAL T14-053 (IA36)                                           PAGE  459

                                    CAL T14-053 IA36 O2 + T1 + S1 UPPER MPS NOZZLE            (AUFA08)   ( 17 NOV 73  )

                REFERENCE DATA                                                                  PARAMETRIC DATA

SREF  =    49.4000 SQ.FT.   XMRP  =   158.0000 INCHES
                                                                         ALPHA  =     .000   POWER  =     1.000
LREF  =    90.7000 INCHES   YMRP  =      .0000 INCHES
                                                                         OPR    =   28.310   SRMPR  =     2.020
BREF  =    90.7000 INCHES   ZMRP  =      .0000 INCHES
                                                                         GP1    =   11.000   GY1    =    -9.000
SCALE =      .0190 SCALE
                                                                         GP2    =     .000   GY2    =    -9.000
                                                                         GP3    =     .000   GY3    =    -9.000
 MACH NO.      1.194
                      SECTION( 1)    UPPER MPS NOZZLE                  SECTION LIMITS      .000 /    1.000

                                          DCNMDX
 X/DE       GRADIENT  BETA        -6.0740     -3.0440      .0000      3.0490      6.0790

   .058      -.1666                 .3870       .5073      .4983       .6319       .8156
   .232      -.1732                 .4493       .5273      .5865       .6441       .7492
   .406      -.2426                 .6546       .7386      .7433       .6339       .6959
   .580      -.0670                 .1165       .2040      .2933       .2801       .2476
   .754       .0030                 .0059      -.0090     -.0004       .0210       .0841
   .928      -.0007                -.0001       .0023     -.0017      -.0109      -.0162
```

```
DATE 05 NOV 75              TABULATED DATA FOR CAL T14-053 (IA36)
                                        CAL T14-053 IA36 02 + T1 + S1 UPPER MPS NOZZLE          (AUFA08)    ( 17 NOV 73  )

                 REFERENCE DATA                                                                  PARAMETRIC DATA

SREF  =    49.4000 SQ.FT.   XMRP  =   158.0000 INCHES                       ALPHA  =      .000   POWER  =      1.000
LREF  =    90.7000 INCHES   YMRP  =      .0000 INCHES                       CPR    =    28.310   SRMPR  =      2.020
BREF  =    90.7000 INCHES   ZMRP  =      .0000 INCHES                       GP1    =    11.000   GY1    =     -9.000
SCALE =      0190 SCALE                                                     GP2    =      .000   GY2    =     -9.000
                                                                            GP3    =      .000   GY3    =     -9.000

 MACH NO.     1.194                                                        SECTION LIMITS      .000 /    1.000
                            SECTION( 1)    UPPER MPS NOZZLE

                                                DCY/DX

 X/DE       GRADIENT  BETA          -6.0740    -3.0440      .0000      3.0490     6.0730

    .058       .0241                 -.0640     -.0734     -.1947     -.2736     -.3552
    .232      -.0284                  .0901      .0865      .0611     -.0094     -.1204
    .406       .0714                 -.2146     -.2173     -.2644     -.3127     -.2592
    .580      - 0065                  .0110      .0197     -.0553     -.0794     -.0705
    .754       .0022                  .0051     -.0066     -.0084     -.0131     -.0076
    .928      -.0004                  .0011      .0013     -.0049     -.0052      .0038
```

```
DATE 05 NOV 75            TABULATED DATA FOR CAL T14-053 (IA36)                                          PAGE  461

                                     CAL T14-053 IA36 O2 + T1 + S1 UPPER MPS NOZZLE              (AUFA08)   ( 17 NOV 73  )

                REFERENCE DATA                                                                    PARAMETRIC DATA

SREF  =     49.4000 SQ.FT.   XMRP  =   158.0000 INCHES
                                                                                 ALPHA  =      .000   POWER  =     1.000
LREF  =     90.7000 INCHES   YMRP  =      .0000 INCHES
                                                                                 OPR    =    26.310   SRMPR  =     2.020
BREF  =     90.7000 INCHES   ZMRP  =      .0000 INCHES
                                                                                 GP1    =    11.000   GY1    =    -9.000
SCALE =       .0190 SCALE
                                                                                 GP2    =      .000   GY2    =    -9.000
                                                                                 GP3    =      .000   GY3    =    -9.000
 MACH NO.      1.194
                        SECTION( 1)    UPPER MPS NOZZLE                       SECTION LIMITS      .000 /   1.000

                                              DCYNDX

 X/DE       GRADIENT  BETA        -6.0740     -3.0440      .0000      3.0490      6.0790

    .058     -.0406                 .1078       .1236      .3279       .4608       .5981
    .232      .0429               -.1360     -.1306     -.0923       .0142       .1818
    .406      .0455               -.2190     -.1385     -.1562     -.0095     -.0810
    .580      .0075               -.0127     -.0229      .0643       .0922       .0819
    .754     -.0021               -.0050       .0065      .0083       .0129       .0075
    .929      .0003               -.0009     -.0010      .0040       .0042     -.0031
```

```
DATE 05 NOV 75          TABULATED DATA FOR CAL T14-053 (IA36)                                                PAGE  462

                                   CAL T14-053 IA36 02 + T1 + S1 LOWER LH MPS NOZ.                (AUFB01)    ( 17 NOV 73  )

               REFERENCE DATA                                                                     PARAMETRIC DATA

SREF  =    49.4000 SQ.FT.   XMRP  =   158.0000 INCHES
                                                                                 BETA   =     .000  POWER  =     .000
LREF  =    90.7000 INCHES   YMRP  =      .0000 INCHES
                                                                                 GP1    =   11.000  GY1    =   -9.000
BREF  =    90.7000 INCHES   ZMRP  =      .0000 INCHES
                                                                                 GP2    =     .000  GY2    =   -9.000
SCALE =      .0190 SCALE
                                                                                 GP3    =     .000  GY3    =     .000

 MACH NO.      .901
                         SECTION( 1)   LOWER LH MPS NOZ.                       SECTION LIMITS     .000 /   1.000

                                          DCN/DX

X/DE      GRADIENT  ALPHA      -8.0880    -4.0490      .0130     4.0050     6.0060

   .058    -.0012                .0064      .0050     -.0015      .0079      .0012
   .232    -.0004                .0021      .0015     -.0013      .0017     -.0001
   .406     .0012               -.0036     -.0048      .0018     -.0033     -.0020
   .580     .0003               -.0014     -.0013     -.0003      .0002     -.0008
   .754    -.0005                .0015      .0020     -.0002      .0012     -.0014
   .928    -.0004                .0010      .0014     -.0013     -.0004     -.0006
```

```
DATE 05 NOV 75            TABULATED DATA FOR CAL T14-053 (IA36)                                                 PAGE  463
                                   CAL T14-053 IA36 O2 + T1 + S1 LOWER LH MPS NOZ.             (AUFB01)   ( 17 NOV 73  )
               REFERENCE DATA                                                                  PARAMETRIC DATA
SREF  =    49.4000 SQ.FT.   XMRP  =   158.0000 INCHES
LREF  =    90.7000 INCHES   YMRP  =      .0000 INCHES                       BETA   =     .000   POWER  =     .000
BREF  =    90.7000 INCHES   ZMRP  =      .0000 INCHES                       GP1    =   11.000   GY1    =   -9.000
SCALE =      .0190 SCALE                                                    GP2    =     .000   GY2    =   -9.000
                                                                            GP3    =     .000   GY3    =     .000
 MACH NO.      .901
                   SECTION( 1)   LOWER LH MPS NOZ.                     SECTION LIMITS     .000 /   1.000
                                            DCNMDX
 X/DE      GRADIENT  ALPHA      -8.0880    -4.0490      .0130     4.0050     6.0060

   .058      .0021              -.0108     -.0084      .0026     -.0133     -.0020
   .232      .0006              -.0031     -.0022      .0020     -.0025      .0001
   .406     -.0016               .0048      .0064     -.0024      .0044      .0027
   .580     -.0004               .0016      .0015      .0003     -.0003      .0009
   .754      .0005              -.0015     -.0020      .0001     -.0011      .0014
   .928      .0003              -.0008     -.0012      .0010      .0004      .0005
```

```
DATE 05 NOV 75            TABULATED DATA FOR CAL T14-053 (IA36)                                                 PAGE  464
                                  CAL T14-053 IA36 O2 + T1 + S1 LOWER LH MPS NOZ.              (AUFB01)    ( 17 NOV 73  )
                 REFERENCE DATA                                                                   PARAMETRIC DATA

SREF   =      49.4000 SQ.FT.   XMRP   =    158.0000 INCHES                           BETA    =       .000   POWER   =        .000
LREF   =      90.7000 INCHES   YMRP   =       .0000 INCHES                           GP1     =     11.000   GY1     =      -9.000
BREF   =      90.7000 INCHES   ZMRP   =       .0000 INCHES                           GP2     =       .000   GY2     =      -9.000
SCALE  =        .0190 SCALE                                                          GP3     =       .000   CY3     =        .000

 MACH NO.       .901
                              SECTION( 1)    LOWER LH MPS NOZ.                      SECTION LIMITS     .000 /    1.000
                                              DCY/DX
 X/DE        GRADIENT   ALPHA         -8.0880      -4.0490        .0130       4.0050       6.0060

    .058       .0009                   -.0047       -.0038       -.0146       -.0141       -.0097
    .232       .0005                   -.0004       -.0018       -.0025       -.0009       -.0048
    .406       .0005                   -.0054       -.0018       -.0006        .0013       -.0086
    .580      -.0009                    .0019        .0037       -.0008       -.0043       -.0087
    .754      -.0011                    .0029        .0043       -.0043       -.0031       -.0049
    .928      -.0005                   -.0016        .0020       -.0021       -.0026       -.0012
```

```
                                   CAL T14-053 IA36 O2 + T1 + S1 LOWER LH MPS NOZ.           (AUFB01)   ( 17 NOV 73  )

           REFERENCE DATA                                                                  PARAMETRIC DATA

SREF   =    49.4000 SQ.FT.   XMRP  =   158.0000 INCHES
                                                                     BETA   =      .000  POWER  =      .000
LREF   =    90.7000 INCHES   YMRP  =      .0000 INCHES
                                                                     GP1    =    11.000  GY1    =    -9.000
BREF   =    90.7000 INCHES   ZMRP  =      .0000 INCHES
                                                                     GP2    =      .000  GY2    =    -9.000
SCALE  =     .0190 SCALE
                                                                     GP3    =      .000  GY3    =      .000

 MACH NO.     .901
                         SECTION( 1)   LOWER LH MPS NOZ.                SECTION LIMITS     .000 /   1.000

                                           DCYNDX

 X/DE      GRADIENT  ALPHA      -8.0680   -4.0490     .0130    4.0050    6.0060

   .058     -.0016                .0079     .0064     .0245     .0237     .0163
   .232     -.0007                .0006     .0028     .0037     .0013     .0072
   .406     -.0006                .0073     .0024     .0008    -.0017     .0115
   .580      .0011               -.0022    -.0043     .0009     .0050     .0101
   .754      .0010               -.0029    -.0042     .0043     .0031     .0048
   .928      .0004                .0013    -.0016     .0017     .0022     .0009
```

```
DATE 05 NOV 75          TABULATED DATA FOR CAL T14-053 (IA36)                                          PAGE  466

                                   CAL T14-053 IA36 02 + T1 + S1 LOWER LH MPS NOZ.              (AUFB02)   ( 17 NOV 73  )

             REFERENCE DATA                                                                        PARAMETRIC DATA

SREF  =    49.4000 SQ.FT.   XMRP  =   158.0000 INCHES
                                                                                 ALPHA  =      .000   POWER  =      .000
LREF  =    90.7000 INCHES   YMRP  =      .0000 INCHES
                                                                                 GP1    =    11.000   GY1    =    -9.000
BREF  =    90.7000 INCHES   ZMRP  =      .0000 INCHES
                                                                                 GP2    =      .000   GY2    =    -9.000
SCALE =      .0190 SCALE
                                                                                 GP3    =      .000   GY3    =      .000

 MACH NO.      .901
                          SECTION( 1)    LOWER LH MPS NOZ.                   SECTION LIMITS      .000 /   1.000

                                             DCN/DX

 X/DE      GRADIENT  BETA        -6.0790    -3.0490      .0000     3.0510     6.0890

   .058      .0028                 .0015     -.0085     -.0022      .0027      .0091
   .232      .0021               -.0016     -.0065     -.0011      .0046      .0048
   .406      .0016               -.0026     -.0048     -.0058      .0026      .0043
   .580      .0023               -.0017     -.0070     -.0006      .0053      .0089
   .754      .0007               -.0018     -.0020     -.0014      .0002      .0059
   .928      .0000                 .0008     -.0000      .0021      .0008      .0034
```

```
DATE 05 NOV 75            TABULATED DATA FOR CAL T14-053 (IA36)                                                  PAGE  467

                                   CAL T14-053 IA36 C2 + T1 + S1 LOWER LH MPS NOZ.                (AUFB02)    ( 17 NOV 73  )

                  REFERENCE DATA                                                                          PARAMETRIC DATA

SREF  =     49.4000 SQ.FT.   XMRP  =   158.0000 INCHES
                                                                                          ALPHA  =      .000  POWER  =      .000
LREF  =     90.7000 INCHES   YMRP  =      .0000 INCHES
                                                                                          GP1    =    11.000  GY1    =    -9.000
BREF  =     90.7000 INCHES   ZMRP  =      .0000 INCHES
                                                                                          GP2    =      .000  GY2    =    -9.000
SCALE =      .0190 SCALE
                                                                                          GP3    =      .000  GY3    =      .000

 MACH NO.      .901
                               SECTION( 1)    LOWER LH MPS NOZ.                         SECTION LIMITS      .000 /    1.000

                                              DCNMDX

 X/DE       GRADIENT  BETA         -6.0790     -3.0490       .0000      3.0510      6.0890

   .058      -.0047                -.0025       .0144       .0037      -.0045      -.0152
   .232      -.0032                 .0024       .0098       .0017      -.0069      -.0073
   .406      -.0021                 .0034       .0065       .0078      -.0035      -.0058
   .580      -.0027                 .0020       .0081       .0007      -.0061      -.0103
   .754      -.0007                 .0017       .0020       .0014      -.0002      -.0059
   .928      -.0000                -.0007       .0000      -.0017      -.0006      -.0027
```

CAL T14-053 IA36 02 + T1 + S1 LOWER LH MPS NOZ. (AUFB02) (17 NOV 73)

REFERENCE DATA

SREF = 49.4000 SQ.FT. XMRP = 158.0000 INCHES
LREF = 90.7000 INCHES YMRP = .0000 INCHES
BREF = 90.7000 INCHES ZMRP = .0000 INCHES
SCALE = .0190 SCALE

PARAMETRIC DATA

ALPHA = .000 POWER = .000
GP1 = 11.000 GY1 = -9.000
GP2 = .000 GY2 = -9.000
GP3 = .000 GY3 = .000

MACH NO .901

SECTION(1) LOWER LH MPS NOZ. SECTION LIMITS .000 / 1.000

			DCY/DX				
X/DE	GRADIENT	BETA	-6.0790	-3.0490	.0000	3.0510	6.0890
.058	.0002		-.0000	-.0006	-.0113	-.0134	-.0182
.232	.0002		.0052	-.0005	-.0038	-.0002	-.0054
.406	.0007		.0026	-.0022	-.0029	-.0005	-.0005
.580	.0006		-.0010	-.0017	-.0005	-.0024	-.0003
.754	.0006		-.0007	-.0018	-.0000	-.0029	-.0017
.928	.0011		-.0036	-.0035	-.0022	-.0012	-.0024

```
DATE 05 NOV 75           TABULATED DATA FOR CAL T14-053 (IA36)                                                  PAGE  469

                                   CAL T14-053 IA36 02 + T1 + S1 LOWER LH MPS NOZ.                (AUFB02)   ( 17 NOV 73  )

               REFERENCE DATA                                                                        PARAMETRIC DATA

SREF  =    49.4000 SQ.FT.   XMRP  =   158.0000 INCHES
                                                                                        ALPHA  =      .000  POWER  =      .000
LREF  =    90.7000 INCHES   YMRP  =      .0000 INCHES
                                                                                        GP1    =    11.000  GY1    =    -9.000
BREF  =    90.7000 INCHES   ZMRP  =      .0000 INCHES
                                                                                        GP2    =      .000  GY2    =    -9.000
SCALE =      .0190 SCALE
                                                                                        GP3    =      .000  GY3    =      .000
 MACH NO.      .901
                          SECTION( 1)    LOWER LH MPS NOZ.                          SECTION LIMITS      .000 /    1.000

                                          DCYNDX

 X/DE      GRADIENT  BETA       -6.0790     -3.0490       .0000      3.0510      6.0890

    .058    -.0004                .0001       .0011       .0190       .0225       .0307
    .232    -.0002               -.0078       .0007       .0057       .0003       .0081
    .406    -.0010               -.0035       .0030       .0039       .0007       .0007
    .580    -.0007                .0012       .0020       .0006       .0028       .0003
    .754    -.0006                .0007       .0018       .0000       .0029       .0017
    .928    -.0009                .0029       .0028       .0018       .0010       .0019
```

```
DATE 05 NOV 75            TABULATED DATA FOR CAL T14-053 (IA36)                                                        PAGE  470
                                              CAL T14-053 IA36 02 + T1 + S1 LOWER LH MPS NOZ.                 (AUF803)   ( 17 NOV 73  )
                                                                                                              PARAMETRIC DATA
                 REFERENCE DATA
SREF  =    49.4000 SQ.FT.   XMRP  =  158.0000 INCHES                                    BETA   =      .000   POWER  =     1.000
LREF  =    90.7000 INCHES   YMRP  =     .0000 INCHES                                    OPR    =    36.200   SRMPR  =     2.330
BREF  =    90.7000 INCHES   ZMRP  =     .0000 INCHES                                    GP1    =    11.000   GY1    =    -9.000
SCALE =      .0190 SCALE                                                                GP2    =      .000   GY2    =    -9.000
                                                                                        GP3    =      .000   GY3    =    -9.000

 MACH NO.      .897                                                                  SECTION LIMITS     .000 /   1.000
                          SECTION( 1)   LOWER LH MPS NOZ.
                                                  DCN/CX
 X/DE       GRADIENT  ALPHA          -8.0880     -4.0380       .0010      4.0260      6.0210

   .058      -.0005                    .0138       .0019       .0076       .0063       .0042
   .232       .0014                   -.0099      -.0055       .0014       .0012      -.0005
   .406       .0018                   -.0112      -.0072      -.0004       .0017       .0041
   .580      -.0003                    .0007       .0011       .0014       .0071       .0064
   .754       .0009                    .0015      -.0035      -.0001       .0027       .0056
   .928      -.0001                    .0048       .0003       .0025       .0014       .0024
```

```
                              CAL T14-053 IA36 02 + T1 + S1 LOWER LH MPS NOZ.              (AUFB03)    ( 17 NOV 73  )

             REFERENCE DATA                                                                     PARAMETRIC DATA

SREF  =    49.4000 SQ.FT.   XMRP  =   158.0000 INCHES
                                                                         BETA   =      .000  POWER  =     1.000
LREF  =    90.7000 INCHES   YMRP  =      .0000 INCHES
                                                                         OPR    =    36.200  SRMPR  =     2.330
BREF  =    90.7000 INCHES   ZMRP  =      .0000 INCHES
                                                                         GP1    =    11.000  GY1    =    -9.000
SCALE =      .0190 SCALE
                                                                         GP2    =      .000  GY2    =    -9.000
                                                                         GP3    =      .000  GY3    =    -9.000
 MACH NO.      .897
                          SECTION( 1)   LOWER LH MPS NOZ.               SECTION LIMITS    .000 /   1.000

                                              DCNMDX

 X/DE      GRADIENT  ALPHA        -8.0880    -4.0380      .0010     4.0260     8.0210

    .058      .0008               -.0232     -.0033     -.0128     -.0106     -.0071
    .232     -.0021                .0150      .0083     -.0022     -.0018      .0007
    .406     -.0024                .0150      .0096      .0006     -.0023     -.0055
    .580      .0003               -.0009     -.0013     -.0016     -.0082     -.0075
    .754     -.0009               -.0015      .0035      .0001     -.0027     -.0055
    .928      .0001               -.0039     -.0003     -.0020     -.0011     -.0020
```

```
DATE 05 NOV 75          TABULATED DATA FOR CAL T14-053 (IA36)                                            PAGE  472

                                   CAL T14-053 IA35 C2 + T1 + S1 LOWER LH MPS NOZ.            (AUFB03)    ( 17 NOV 73  )

                    REFERENCE DATA                                                                  PARAMETRIC DATA

SREF   =    49.4000 SQ.FT.   XMRP   =   158.0000 INCHES                      BETA    =      .000   POWER   =     1.000
LREF   =    90.7000 INCHES   YMRP   =      .0000 INCHES                      OPR     =    36.200   SRMPR   =     2.330
BREF   =    90.7000 INCHES   ZMRP   =      .0000 INCHES                      GP1     =    11.000   GY1     =    -9.000
SCALE  =      .0190 SCALE                                                    GP2     =      .000   GY2     =    -9.000
                                                                             GP3     =      .000   GY3     =    -9.000

 MACH NO.       .897                                                         SECTION LIMITS      .000 /    1.000
                            SECTION( 1)    LOWER LH MPS NOZ.

                                              DCY/DX

 X/DE      GRADIENT  ALPHA        -8.0880    -4.0380     .0010     4.0260     6.0210

   .058      .0011                -.0090     -.0044     -.0065     -.0105     -.0087
   .232      .0016                -.0002     -.0064     -.0054      .0008      .0040
   .406      .0006                -.0022     -.0025     -.0034      .0039      .0011
   .580      .0011                -.0006     -.0044     -.0013     -.0040      .0014
   .754      .0010                 .0001     -.0039     -.0014     -.0027     -.0022
   .928      .0004                -.0019     -.0017     -.0018     -.0028     -.0005
```

```
                                   CAL T14-053 IA36 02 + T1 + S1 LOWER LH MPS NOZ.              (AUFB03)   ( 17 NOV 73  )

            REFERENCE DATA                                                                         PARAMETRIC DATA

SREF  =    49.4000 SQ.FT.   XMRP  =   158.0000 INCHES
                                                                                 BETA   =      .000   POWER   =     1.000
LREF  =    90.7000 INCHES   YMRP  =      .0000 INCHES
                                                                                 OPR    =    36.200   SRMPR   =     2.330
BREF  =    90.7000 INCHES   ZMRP  =      .0000 INCHES
                                                                                 GP1    =    11.000   GY1     =    -9.000
SCALE =      .0190 SCALE
                                                                                 GP2    =      .000   GY2     =    -9.000
                                                                                 GP3    =      .000   GY3     =    -9.000

 MACH NO.      .897
                              SECTION( 1)    LOWER LH MPS NOZ.                       SECTION LIMITS      .000 /    1.000

                                                DCYNOX

 X/DE       GRADIENT  ALPHA        -8.0800     -4.0380       .0010      4.0260      6.0210

    .058     -.0018                  .0151       .0074       .0110       .0176       .0146
    .232     -.0024                  .0002       .0096       .0081      -.0013      -.0060
    .406     -.0008                  .0030       .0034       .0046      -.0052      -.0015
    .580     -.0013                  .0007       .0051       .0015       .0047      -.0016
    .754     -.0009                 -.0001       .0039       .0014       .0027       .0021
    .928     -.0003                  .0015       .0014       .0015       .0023       .0004
```

```
DATE 05 NOV 75            TABULATED DATA FOR CAL T14-053 (IA36)                                              PAGE  474

                                   CAL T14-053 IA36 O2 + T1 + S1 LOWER LH MPS NOZ.                (AUFB04)    ( 17 NOV 73 )

                  REFERENCE DATA                                                                      PARAMETRIC DATA

SREF  =    49.4000 SQ.FT.   XMRP  =    158.0000 INCHES                          ALPHA  =      .000   POWER  =     1.000
LREF  =    90.7000 INCHES   YMRP  =       .0000 INCHES                          OPR    =    36.200   SRMPR  =     2.330
BREF  =    90.7000 INCHES   ZMRP  =       .0000 INCHES                          GP1    =    11.000   GY1    =    -9.000
SCALE =      .0190 SCALE                                                        GP2    =      .000   GY2    =    -9.000
                                                                                GP3    =      .000   GY3    =    -9.000

 MACH NO.      .899                                                          SECTION LIMITS      .000 /   1.000
                          SECTION( 1)    LOWER LH MPS NOZ.
                                               DCN/DX

 X/DE       GRADIENT  BETA          -6 0780     -3.0490      .0000     3.0510     6.0880

   .050      -.0110                   .0610       .0336      .0114      .0021      .0125
   .232       .0002                   .0067      -.0005     -.0033     -.0007     -.0020
   .406       .0037                  -.0060      -.0112     -.0040      .0017     -.0024
   .580       .0015                  -.0089      -.0045      .0054      .0036      .0070
   .754       .0003                  -.0088      -.0009      .0038     -.0006      .0009
   .920      -.0003                   .0019       .0010      .0022      .0015      .0026
```

```
DATE 05 NOV 75              TABULATED DATA FOR CAL T14-053 (IA36)                                                     PAGE  475

                                       CAL T14-053 IA36 02 + T1 + S1 LOWER LH MPS NOZ.                   (AUFB04)    ( 17 NOV 73  )

                  REFERENCE DATA                                                                               PARAMETRIC DATA

SREF  =    49.4000 SQ.FT.   XMRP  =   158.0000 INCHES
                                                                                                ALPHA  =       .000  POWER  =     1.000
LREF  =    90.7000 INCHES   YMRP  =      .0000 INCHES
                                                                                                OPR    =     36.200  SRMPR  =     2.330
BREF  =    90.7000 INCHES   ZMRP  =      .0000 INCHES
                                                                                                GP1    =     11.000  GY1    =    -9.000
SCALE =      .0190 SCALE
                                                                                                GP2    =       .000  GY2    =    -9.000
                                                                                                GP3    =       .000  GY3    =    -9.000
 MACH NO.       .899
                           SECTION( 1)    LOWER LH MPS NOZ.                                  SECTION LIMITS      .000 /   1.000

                                                 DCNMDX

 X/DE       GRADIENT  BETA          -6.0780    -3.0490      .0000     3.0510     6.0880

    .058      .0186                 -.1028     -.0566     -.0192     -.0035     -.0211
    .232    -.0002                  -.0101      .0007      .0050      .0010      .0030
    .406    -.0049                   .0081      .0150      .0053     -.0023      .0033
    .580    -.0017                   .0102      .0052     -.0061     -.0041     -.0091
    .754    -.0003                   .0087      .0009     -.0037      .0006     -.0009
    .928      .0003                 -.0015     -.0008     -.0018     -.0013     -.0021
```

```
DATE 05 NOV 75            TABULATED DATA FOR CAL T14-053 (IA35)                                                    PAGE  475

                                 CAL T14-053 IA36 02 + T1 + S1 LOWER LH MPS NOZ.                (AUFB04)    ( 17 NOV 73   )

               REFERENCE DATA                                                                          PARAMETRIC DATA

SREF  =    49.4000 SQ.FT.   XMRP  =   158.0000 INCHES                        ALPHA  =      .000   POWER  =     1.000
LREF  =    90.7000 INCHES   YMRP  =      .0000 INCHES                        CPR    =    36.200   SRMPR  =     2.330
BREF  =    90.7000 INCHES   ZMRP  =      .0000 INCHES                        GP1    =    11.000   GY1    =    -9.000
SCALE =      .0190 SCALE                                                     GP2    =      .000   GY2    =    -9.000
                                                                             GP3    =      .000   GY3    =    -9.000

 MACH NO.       .899
                           SECTION( 1)    LOWER LH MPS NOZ.                SECTION LIMITS     .000 /    1.000

                                               DCY/DX

 X/DE       GRADIENT  BETA           -6.0780    -3.0490      .0000     3.0510     6.0880

   .058       .0049                  -.0169     -.0149      .0003      .0097      .0097
   .232      -.0020                  -.0015      .0062      .0020      .0107      .0142
   .406      -.0024                   .0039      .0074      .0024      .0052      .0133
   .580      -.0017                   .0016      .0052      .0005     -.0006      .0076
   .754      -.0002                   .0000      .0005     -.0001     -.0009      .0025
   .928       .0005                  -.0003     -.0017     -.0006     -.0013      .0004
```

```
DATE 05 NOV 75          TABULATED DATA FOR CAL T14-053 (IA36)                                                  PAGE  477

                                   CAL T14-053 IA36 02 + T1 + S1 LOWER LH MPS NOZ.              (AUFB04)    ( 17 NOV 73  )

                REFERENCE DATA                                                                      PARAMETRIC DATA

SREF  =    49.4000 SQ.FT.   XMRP  =   158.0000 INCHES
                                                                          ALPHA  =      .000   POWER  =      1.000
LREF  =    90.7000 INCHES   YMRP  =      .0000 INCHES
                                                                          OPR    =    36.200   SRMPR  =      2.330
BREF  =    90.7000 INCHES   ZMRP  =      .0000 INCHES
                                                                          GP1    =    11.000   GY1    =     -9.000
SCALE =      .0190 SCALE
                                                                          GP2    =      .000   GY2    =     -9.000
                                                                          GP3    =      .000   GY3    =     -9.000

 MACH NO.      .899
                         SECTION( 1)   LOWER LH MPS NOZ.                SECTION LIMITS     .000 /    1.000

                                             DCYNDX

 X/DE      GRADIENT  BETA        -6.0780     -3.0490       .0000      3.0510      6.0880

    .058    -.0082                 .0285       .0251     -.0005     -.0163     -.0163
    .232     .0031                 .0025     -.0093     -.0030     -.0161     -.0214
    .406     .0032               -.0052     -.0099     -.0032     -.0070     -.0178
    .580     .0020               -.0019     -.0060     -.0005       .0007     -.0088
    .754     .0002               -.0000     -.0005       .0001       .0009     -.0025
    .928    -.0004                 .0002       .0014       .0005       .0011     -.0003
```

```
DATE 05 NOV 75          TABULATED DATA FOR CAL T14-053 (IA36)                                              (AUFB05)    ( 17 NOV 73 )
                              CAL T14-053 IA36 O2 + T1 + S1 LOWER LH MPS NOZ.

           REFERENCE DATA                                                                              PARAMETRIC DATA

SREF  =    49.4000 SQ.FT.   XMRP  =   158.0000 INCHES                                   BETA   =      .000   POWER  =      .000
LREF  =    90.7000 INCHES   YMRP  =      .0000 INCHES                                   GP1    =    11.000   GY1    =    -9.000
BREF  =    90.7000 INCHES   ZMRP  =      .0000 INCHES                                   GP2    =      .000   GY2    =    -9.000
SCALE =      .0190 SCALE                                                                GP3    =      .000   GY3    =      .000

 MACH NO.     1.203                                                                  SECTION LIMITS     .000 /   1.000
                         SECTION( 1)    LOWER LH MPS NOZ.
                                           DCN/DX

 X/DE      GRADIENT  ALPHA        -8.1010    -4.0380    -.0110     4.0030     6.0180

   .058      .0001                  .0011     -.0004    -.0012      .0051      .0016
   .232     -.0011                  .0072      .0043     .0058      .0088      .0145
   .406     -.0027                  .0093      .0108     .0111      .0149      .0142
   .580     -.0021                  .0032      .0084     .0104      .0116      .0141
   .754     -.0017                  .0014      .0070     .0076      .0077      .0108
   .928     -.0009                  .0029      .0038     .0054      .0055      .0053
```

```
                                CAL T14-053 IA36 O2 + T1 + S1 LOWER LH MPS NOZ.              (AUFB05)   ( 17 NOV 73  )

             REFERENCE DATA                                                                  PARAMETRIC DATA

SREF  =    49.4000 SQ.FT.   XMRP  =   158.0000 INCHES
                                                                         BETA   =      .000   POWER   =      .000
LREF  =    90.7000 INCHES   YMRP  =      .0000 INCHES
                                                                         GP1    =    11.000   GY1     =    -9.000
BREF  =    90.7000 INCHES   ZMRP  =      .0000 INCHES
                                                                         GP2    =      .000   GY2     =    -9.000
SCALE =      .0190 SCALE
                                                                         GP3    =      .000   GY3     =      .000

 MACH NO.     1.203
                        SECTION( 1)    LOWER LH MPS NOZ.                SECTION LIMITS     .000 /   1.000

                                          DCNMDX

 X/DE      GRADIENT  ALPHA       -8.1010    -4.0380     -.0110     4.0030     6.0180

   .058     -.0002               -.0018      .0007      .0020     -.0086     -.0028
   .232      .0016               -.0109     -.0064     -.0088     -.0133     -.0220
    406      .0036               -.0124     -.0144     -.0148     -.0199     -.0189
   .580      .0024               -.0038     -.0097     -.0121     -.0135     -.0164
   .754      .0017               -.0014     -.0069     -.0075     -.0076     -.0107
   .928      .0008               -.0024     -.0031     -.0044     -.0045     -.0043
```

```
DATE 05 NOV 75          TABULATED DATA FOR CAL T14-053 (IA36)                                                    PAGE  480
                                  CAL T14-053 IA36 02 + T1 + S1 LOWER LH MPS NOZ.                (AUF805)    ( 17 NOV 73  )

               REFERENCE DATA                                                               PARAMETRIC DATA

SREF  =    49.4000 SQ.FT.   XMRP  =   158.0000 INCHES
                                                                                BETA   =      .000   POWER   =        .000
LREF  =    90.7000 INCHES   YMRP  =      .0000 INCHES
                                                                                GP1    =    11.000   GY1     =      -9.000
BREF  =    90.7000 INCHES   ZMRP  =      .0000 INCHES
                                                                                GP2    =      .000   GY2     =      -9.000
SCALE =      .0190 SCALE
                                                                                GP3    =      .000   GY3     =        .000

 MACH NO.     1.203                                                           SECTION LIMITS     .000 /   1.000
                          SECTION( 1)    LOWER LH MPS NOZ.

                                               DCY/DX

 X/DE       GRADIENT  ALPHA       -8.1010     -4.0380     -.0110      4.0030      6.0180

   .058       .0033                -.0065      -.0135     -.0155      -.0180      -.0234
   .232      -.0028                 .0132       .0111      .0098       .0037       .0070
   .406      -.0007                 .0041       .0028      .0021       .0000      -.0007
   .580       .0014                -.0039      -.0056     -.0035      -.0056      -.0048
   .754       .0020                -.0059      -.0079     -.0071      -.0112      -.0092
   .923       .0024                -.0058      -.0096     -.0066      -.0081      -.0086
```

```
                           CAL T14-053 IA36 O2 + T1 + S1 LOWER LH MPS NOZ.            (AUFB05)   ( 17 NOV 73  )

           REFERENCE DATA                                                              PARAMETRIC DATA

SREF  =    49.4000 SQ.FT.   XMRP  =   158.0000 INCHES
LREF  =    90.7000 INCHES   YMRP  =      .0000 INCHES                   BETA   =     .000  POWER  =    .000
BREF  =    90.7000 INCHES   ZMRP  =      .0000 INCHES                   GP1    =   11.000  GY1    =  -9.000
SCALE =      .0190 SCALE                                                GP2    =     .000  GY2    =  -9.000
                                                                        GP3    =     .000  GY3    =    .000
MACH NO.     1.203
                     SECTION( 1)   LOWER LH MPS NOZ.                 SECTION LIMITS    .000 /   1.000

                                        DCYNDX
X/DE     GRADIENT  ALPHA    -8.1010   -4.0380    -.0110    4.0030    6.0180

  .058    -.0056             .0110     .0227     .0261     .0303     .0395
  .232     .0042           -.0199    -.0168    -.0147    -.0056    -.0106
  .406     .0009           -.0055    -.0037    -.0028    -.0000     .0010
  .580    -.0016             .0045     .0065     .0040     .0065     .0056
  .754    -.0019             .0058     .0078     .0070     .0111     .0090
  .928    -.0019             .0047     .0078     .0053     .0066     .0070
```

```
DATE 05 NOV 75          TABULATED DATA FOR CAL T14-053 (IA36)                                              PAGE  493

                                CAL T14-053 IA36 O2 + T1 + S1 LOWER LH MPS NOZ.                  (AUFB05)   ( 17 NOV 73  )

              REFERENCE DATA                                                                    PARAMETRIC DATA

SREF   =      49.4000 SQ.FT.   XMRP   =   158.0000 INCHES                        ALPHA   =      .000   POWER   =      .000
LREF   =      90.7000 INCHES   YMRP   =      .0000 INCHES                        GP1     =    11.000   GY1     =    -9.000
BREF   =      90.7000 INCHES   ZMRP   =      .0000 INCHES                        GP2     =      .000   GY2     =    -9.000
SCALE  =        .0190 SCALE                                                      GP3     =      .000   GY3     =      .000

 MACH NO.      1.202
                              SECTION( 1)    LOWER LH MPS NOZ.                     SECTION LIMITS     .000 /    1.000

                                                 DCN/DX

 X/DE       GRADIENT   BETA         -6.0790     -3.0510      .0000      3.0510      6.0790

   .058       .0007                 -.0033      -.0022     -.0100     -.0046      -.0008
   .232      -.0021                  .0064       .0063      .0074      .0098       .0093
   .405      -.0035                  .0091       .0107     -.1276      .0112       .0136
   .580      -.0027                  .0068       .0081      .0085      .0098       .0130
   .754      -.0022                  .0035       .0056      .0062      .0072       .0066
   .928      -.0010                  .0016       .0032      .0023      .0046       .0031
```

```
DATE 05 NOV 75              TABULATED DATA FOR CAL T14-053 (IA36)                                                        PAGE  483
                                        CAL T14-053 IA36 C2 + T1 + S1 LOWER LH MPS NOZ.              (AUFB06)   ( 17 NOV 73  )
                 REFERENCE DATA                                                                          PARAMETRIC DATA
SREF  =    49.4000 SQ.FT.   XMRP  =   158.0000 INCHES
LREF  =    90.7000 INCHES   YMRP  =      .0000 INCHES                           ALPHA   =      .000   POWER  =      .000
BREF  =    90.7000 INCHES   ZMRP  =      .0000 INCHES                           GP1     =    11.000   GY1    =    -9.000
SCALE =      .0190 SCALE                                                        GP2     =      .000   GY2    =    -9.000
                                                                                GP3     =      .000   GY3    =      .000
 MACH NO.      1.202
                        SECTION( 1)    LOWER LH MPS NOZ.                      SECTION LIMITS      .000 /    1.000
                                                DCNMDX
X/DE       GRADIENT   BETA       -6.0790     -3.0510      .0000      3.0510     6.0790

   .058     -.0012                  .0055       .0038      .0168       .0079      .0013
   .232      .0031                -.0097      -.0095     -.0112      -.0148     -.0140
   .406      .0047                -.0122      -.0144      .1704      -.0149     -.0182
   .580      .0031                -.0079      -.0095     -.0099      -.0113     -.0151
   .754      .0021                -.0035      -.0066     -.0061      -.0071     -.0065
   .928      .0008                -.0013      -.0026     -.0019      -.0038     -.0025
```

```
DATE 03 NOV 75            TABULATED DATA FOR CAL T14-053 (IA36)                                                PAGE  494

                                         CAL T14-053 IA3S 02 + T1 + S1 LOWER LH MPS NOZ.              (AUFB05)    ( 17 NOV 73  )

                REFERENCE DATA                                                                       PARAMETRIC DATA

SREF  =    49.4000 SQ.FT.   XMRP  =   158.0000 INCHES                         ALPHA   =        .000   POWER   =        .000
LREF  =    90.7000 INCHES   YMRP  =      .0000 INCHES                         GP1     =      11.000   GY1     =      -9.000
BREF  =    90.7000 INCHES   ZMRP  =      .0000 INCHES                         GP2     =        .000   GY2     =      -9.000
SCALE =      .0190 SCALE                                                      GP3     =        .000   GY3     =        .000

 MACH NO.      1.202
                                SECTION( 1)    LOWER LH MPS NOZ.                         SECTION LIMITS       .000 /    1.000

                                                 DCY/DX

X/DE        GRADIENT  BETA           -6.0790    -3.0510      .0000     3.0510     6.0790

   .058       .0042                  -.0098     -.0129     -.0119     -.0263     -.0214
   .232      -.0045                   .0050      .0137      .0099      .0019      .0077
   .406      -.0016                   .0012      .0050      .0013      .0003      .0074
   .580       .0013                  -.0052     -.0040     -.0046     -.0027     -.0029
   .754       .0023                  -.0079     -.0070     -.0077     -.0070     -.0071
   .928       .0024                  -.0078     -.0074     -.0073     -.0080     -.0082
```

```
DATE 05 NOV 75            TABULATED DATA FOR CAL T14-053 (IA36)                                      PAGE  485

                                   CAL T14-053 IA36 O2 + T1 + S1 LOWER LH MPS NOZ.            (AUFB06)   ( 17 NOV 73  )

               REFERENCE DATA                                                                  PARAMETRIC DATA

SREF   =    49.4000 SQ.FT.   XMRP  =   138.0000 INCHES
                                                                          ALPHA  =      .000  POWER  =      .000
LREF   =    90.7000 INCHES   YMRP  =      .0000 INCHES
                                                                          GP1    =    11.000  GY1    =    -9.000
BREF   =    90.7000 INCHES   ZMRP  =      .0000 INCHES
                                                                          GP2    =      .000  GY2    =    -9.000
SCALE  =      .0190 SCALE
                                                                          GP3    =      .000  GY3    =      .000

 MACH NO.     1.202
                          SECTION( 1)    LOWER LH MPS NOZ.                          SECTION LIMITS     .000 /    1.000

                                              DCYNDX

 X/DE       GRADIENT  BETA        -6.0790    -3.0510      .0000     3.0510     6.0790

   .058      -.0071                 .0164      .0217      .0201      .0442      .0360
   .232       .0068               -.0076     -.0207     -.0150     -.0029     -.0116
   .406       .0022               -.0017     -.0067     -.0017     -.0004     -.0099
   .580      -.0015                 .0061      .0046      .0053      .0032      .0034
   .754      -.0023                 .0078      .0070      .0076      .0059      .0070
   .928      -.0020                 .0064      .0060      .0059      .0055      .0066
```

```
                                        CAL TI4-053 IA35 02 + T1 + S1 LOWER LH MPS NOZ.              (AUFB07)   ( 17 NOV 73  )

               REFERENCE DATA                                                                    PARAMETRIC DATA

SREF  =   49.4000 SQ.FT.   XMRP  =   158.0000 INCHES
                                                                                    BETA   =      .000   POWER  =     1.000
LREF  =   90.7000 INCHES   YMRP  =      .0000 INCHES
                                                                                    OPR    =    28.310   SRMPR  =     2.020
BREF  =   90.7000 INCHES   ZMRP  =      .0000 INCHES
                                                                                    GP1    =    11.000   GY1    =    -9.000
SCALE =     .0190 SCALE
                                                                                    GP2    =      .000   GY2    =    -9.000
                                                                                    GP3    =      .000   GY3    =    -9.000
 MACH NO.     1.199
                         SECTION( 1)    LOWER LH MPS NOZ.                     SECTION LIMITS      .000 /    1.000

                                               DCN/DX

 X/DE       GRADIENT  ALPHA        -8.1080     -4.0750     -.0230     4.0170     6.0280

   .058     -.0137                  .0546       .0556      .0622     -.1261     -.1149
   .232     -.0046                  .0268       .0186      .0098     -.0101     -.0051
   .406      .0001                  .0071      -.0003     -.0059     -.0003      .0023
   .580     -.0005                  .0039       .0026      .0012      .0057      .0032
   .754     -.0009                  .0050       .0037     -.0004      .0125      .0113
   .928     -.0022                  .0114       .0088      .0076      .0055      .0081
```

```
                                CAL T14-053 IA36 O2 + T1 + S1 LOWER LH MPS NOZ.            (AUFB07)   ( 17 NOV 73  )

           REFERENCE DATA                                                                    PARAMETRIC DATA

SREF  =   49.4000 SQ.FT.   XMRP  =  158.0000 INCHES
                                                                     BETA   =     .000   POWER  =    1.000
LREF  =   90.7000 INCHES   YMRP  =      .0000 INCHES
                                                                     OPR    =   28.310   SRMPR  =    2.020
BREF  =   90.7000 INCHES   ZMRP  =      .0000 INCHES
                                                                     GP1    =   11.000   GY1    =   -9.000
SCALE =      .0190 SCALE
                                                                     GP2    =     .000   GY2    =   -9.000
                                                                     GP3    =     .000   GY3    =   -9.000

 MACH NO.     1.199
                        SECTION( 1)    LOWER LH MPS NOZ.                  SECTION LIMITS     .000     1.000

                                                  DCNMOX

 X/DE      GRADIENT  ALPHA       -8.1080    -4.0750    -.0230     4.0170     6.0280

   .058      .0230               -.0919     -.0937    -.1047      .2124      .1935
   .232      .0069               -.0405     -.0280    -.0148      .0152      .0077
   .406     -.0001               -.0095      .0004     .0079      .0004     -.0030
   .580      .0007               -.0046     -.0030    -.0014     -.0066     -.0037
   .754      .0009               -.0050     -.0036     .0003     -.0123     -.0111
   .928      .0018               -.0092     -.0072    -.0062     -.0045     -.0066
```

```
DATE 05 NOV 75           TABULATED DATA FOR CAL T14-053 (IA36)                                          PAGE  489

                                   CAL T14-053 IA36 O2 + T1 + S1 LOWER LH MPS NOZ.          (AUFB07)   ( 17 NOV 73  )

              REFERENCE DATA                                                                   PARAMETRIC DATA

SREF  =    49.4000 SQ.FT.   XMRP  =   158.0000 INCHES
                                                                      BETA    =      .000   POWER   =     1.000
LREF  =    90.7000 INCHES   YMRP  =      .0000 INCHES
                                                                      OPR     =    28.310   SRMPR   =     2.020
BREF  =    90.7000 INCHES   ZMRP  =      .0000 INCHES
                                                                      GP1     =    11.000   GY1     =    -9.000
SCALE =      .0190 SCALE
                                                                      GP2     =      .000   GY2     =    -9.000
                                                                      GP3     =      .000   GY3     =    -9.000

 MACH NO.      1.199
                             SECTION( 1)    LOWER LH MPS NOZ.                        SECTION LIMITS      .000 /   1.000

                                            DCY/DX

 X/DE       GRADIENT  ALPHA        -8.1080      -4.0750      -.0230      4.0170      6.0280

    .058     -.0063                  .0259        .0258        .0169       .0221       .0219
    .232     -.0077                  .0321        .0313        .0303       .0334       .0322
    .406     -.0023                  .0112        .0095        .0054       .0197       .0079
    .580      .0013                 -.0045       -.0053       -.0036      -.0064      -.0051
    .754      .0028                 -.0119       -.0113       -.0099      -.0079      -.0094
    .928      .0019                 -.0063       -.0077       -.0039      -.0082      -.0064
```

```
                          CAL T14-053 IA36 O2 + T1 + S1 LOWER LH MPS NOZ.          (AUFB07)   ( 17 NOV 73  )

            REFERENCE DATA                                                          PARAMETRIC DATA

SREF  =    49.4000 SQ.FT.   XMRP  =   158.0000 INCHES
                                                                       BETA   =     .000   POWER  =    1.000
LREF  =    90.7000 INCHES   YMRP  =      .0000 INCHES
                                                                       OPR    =   28.310   SRMPR  =    2.020
BREF  =    90.7000 INCHES   ZMRP  =      .0000 INCHES
                                                                       GP1    =   11.000   GY1    =   -9.000
SCALE =       .0190 SCALE
                                                                       GP2    =     .000   GY2    =   -9.000
                                                                       GP3    =     .000   GY3    =   -9.000

 MACH NO.      1.199
                     SECTION. 1)    LOWER LH MPS NOZ.                SECTION LIMITS     .000 /   1.000

                                         DCYNDX

 X/DE      GRADIENT  ALPHA      -8.1080     -4.0750     -.0230      4.0170      6.0280

   .058     .0107               -.0435      -.0434      -.0284      -.0372      -.0368
   .232     .0116               -.0485      -.0472      -.0457      -.0504      -.0487
   .406     .0031               -.0150      -.0127      -.0072      -.0263      -.0165
   .580    -.0015                .0052       .0061       .0041       .0074       .0059
   .754    -.0027                .0117       .0112       .0098       .0078       .0083
   .928    -.0015                .0051       .0063       .0032       .0056       .0052
```

```
                                  CAL T14-053 IA36 02 + T1 + S1 LOWER LH MPS NOZ.                (AUFBC8)   ( 17 NOV 73  )

              REFERENCE DATA                                                                      PARAMETRIC DATA

SREF  =    49.4000 SQ.FT.   XMRP  =   158.0000 INCHES                         ALPHA  =     .000   POWER  =    1.000
LREF  =    90.7000 INCHES   YMRP  =      .0000 INCHES                         OPR    =   28.310   SRMPR  =    2.020
BREF  =    90.7000 INCHES   ZMRP  =      .0000 INCHES                         GP1    =   11.000   GY1    =   -9.000
SCALE =      .0190 SCALE                                                      GP2    =     .000   GY2    =   -9.000
                                                                              GP3    =     .000   GY3    =   -9.000

 MACH NO.     1.194
                      SECTION( 1)    LOWER LH MPS NOZ.                       SECTION LIMITS     .000 /    1.000

                                              DCN/DX

 X/DE      GRADIENT  BETA       -6.0740    -3.0440      .0000     3.0490     6.0790

   .058      .0340                .1134     -.1036      .0528     -.0037      .0245
   .232     -.0096                .0423      .0293      .0056      .0047      .0056
   .406      .0001                .0021     -.0003     -.0015     -.0023     -.0017
   .580     -.0016                .0012      .0049     -.0003      .0074      .0013
   .754     -.0007               -.0019      .0020      .0012      .0004      .0041
   .928      .0014               -.0021     -.0041      .0003     -.0114      .0024
```

```
DATE 05 NOV 75          TABULATED DATA FOR CAL T14-053 (IA36)                                         PAGE  491

                                CAL T14-053 IA36 02 + T1 + S1 LOWER LH MPS NOZ.              (AUFB08)    ( 17 NOV 73  )

              REFERENCE DATA                                                                    PARAMETRIC DATA

SREF  =    49.4000 SQ.FT.   XMRP  =   158.0000 INCHES
                                                                                  ALPHA  =      .000   POWER  =     1.000
LREF  =    90.7000 INCHES   YMRP  =      .0000 INCHES
                                                                                  OPR    =    28.310   SRMPR  =     2.020
BREF  =    90.7000 INCHES   ZMRP  =      .0000 INCHES
                                                                                  GP1    =    11.000   GY1    =    -9.000
SCALE =      .0190 SCALE
                                                                                  GP2    =      .000   GY2    =    -9.000
                                                                                  GP3    =      .000   GY3    =    -9.000

 MACH NO.      1.194
                          SECTION( 1)    LOWER LH MPS NOZ.                      SECTION LIMITS      .000 /    1.000        $0

                                             DCNMDX

 X/DE        GRADIENT  BETA          -6.0740     -3.0440      .0000      3.0490     6.0790

    .058      -.0573                  -.1909       .1745     -.0889       .0063     -.0413
    .232       .0146                  -.0639      -.0443     -.0085      -.0071     -.0084
    .406      -.0001                  -.0028       .0003      .0020       .0031      .0023
    .580       .0019                  -.0014      -.0057      .0004      -.0086     -.0015
    .754       .0007                   .0019      -.0020     -.0012      -.0004     -.0040
    .928      -.0011                   .0017       .0034     -.0003       .0093     -.0019
```

```
                                                                                                              PAGE  422
DATE 05 NOV 75          TABULATED DATA FOR CAL T14-053 (IA36)
                                                                                                (AUFB08)   ( 17 NOV 73  )
                                 CAL T14-053 IA36 02 + T1 + S1 LOWER LH MPS NOZ.
                                                                                                   PARAMETRIC DATA
                 REFERENCE DATA

SPREF  =     49.4000 SQ.FT.   XMRP  =   158.0000 INCHES                              ALPHA   =      .000   POWER   =     1.000

LREF   =     90.7000 INCHES   YMRP  =      .0000 INCHES                              OPR     =    28.310   SRMPR   =     2.020

BREF   =     90.7000 INCHES   ZMRP  =      .0000 INCHES                              GP1     =    11.000   GY1     =    -9.000

SCALE  =       .0190 SCALE                                                           GP2     =      .000   GY2     =    -9.000
                                                                                     GP3     =      .000   GY3     =    -9.000

 MACH NO.      1.194                                                           SECTION LIMITS     .000 /    1.000
                               SECTION( 1)    LOWER LH MPS NOZ.
                                                     DCY/DX

  X/DE        GRADIENT   BETA          -6.0740      -3.0440       .0000       3.0490      6.0790

    .058       -.0031                    .0238        .0095       .0129        .0323       .0126
    .232       -.0105                    .0357        .0318       .0274        .0470       .0358
    .406       -.0063                    .0060        .0192       .0063        .0264       .0302
    .580        .0009                   -.0140       -.0027      -.0065        .0164       .0114
    .754        .0038                   -.0227       -.0116      -.0091       -.0102      -.0032
    .928        .0031                   -.0130       -.0095      -.0055       -.0086      -.0040
```

```
                                       CAL T14-053 IA36 O2 + T1 + S1 LOWER LH MPS NOZ.              (AUFB08)   ( 17 NOV 73  )

                   REFERENCE DATA                                                                        PARAMETRIC DATA

SREF  =    49.4000 SQ.FT.   XMRP  =   158.0000 INCHES
                                                                                    ALPHA  =      .000   POWER  =      1.000
LREF  =    90.7000 INCHES   YMRP  =      .0000 INCHES
                                                                                    OPR    =    28.310   SRMPR  =      2.020
BREF  =    90.7000 INCHES   ZMRP  =      .0000 INCHES
                                                                                    GP1    =    11.000   GY1    =     -9.000
SCALE =      .0190 SCALE
                                                                                    GP2    =      .000   GY2    =     -9.000
                                                                                    GP3    =      .000   GY3    =     -9.000
 MACH NO.      1.194
                         SECTION( 1)    LOWER LH MPS NOZ.                          SECTION LIMITS      .000 /    1.000

                                                DCYNDX

 X/DE      GRADIENT  BETA        -6.0740     -3.0440      .0000      3.0490     6.0790

   .058      .0053               -.0401      -.0160     -.0217      -.0544     -.0212
   .232      .0158               -.0538      -.0481     -.0413      -.0710     -.0541
   .406      .0084               -.0080      -.0257     -.0084      -.0352     -.0403
   .580     -.0010                .0163       .0032      .0075      -.0191     -.0132
   .754     -.0038                .0224       .0115      .0090       .0101      .0032
   .928     -.0025                .0105       .0077      .0045       .0070      .0032
```

```
DATE 05 NOV 75          TABULATED DATA FOR CAL T14-053 (IA36)                                              PAGE 494
                                         CAL T14-053 IA36 02 + T1 + S1 LOWER RH MPS NOZ.           (AUFC01)   ( 17 NOV 73  )

               REFERENCE DATA                                                                       PARAMETRIC DATA

SREF  =   49.4000 SQ.FT.   XMRP  =   158.0000 INCHES                         BETA   =      .000   POWER  =      .000
LREF  =   90.7000 INCHES   YMRP  =      .0000 INCHES                         GP1    =    11.000   GY1    =    -9.000
BREF  =   90.7000 INCHES   ZMRP  =      .0000 INCHES                         GP2    =      .000   GY2    =    -9.000
SCALE =     .0190 SCALE                                                      GP3    =      .000   GY3    =      .000

 MACH NO.      .901
                        SECTION( 1)    LOWER RH MPS NOZ.                   SECTION LIMITS     .000 /   1.000

                                          DCN/DX

 X/DE       GRADIENT  ALPHA       -8.0880    -4.0490      .0130     4.0050     6.0060

   .058       .0247               -.1107     -.1001     -.0874     -.0884     -.0911
   .232       .0201               -.0909     -.0813     -.0729     -.0688     -.0742
   .406       .0028               -.0142     -.0112     -.0186     -.0175     -.0159
   .580       .0007                .0079     -.0027     -.0019     -.0107     -.0074
   .754      -.0004                .0035      .0017      .0011      .0036      .0010
   .928       .0021               -.0104     -.0085     -.0075     -.0077     -.0166
```

```
DATE 05 NOV 75          TABULATED DATA FOR CAL T14-053 (IA36)                                             PAGE  495
                                  CAL T14-053 IA36 02 + T1 + S1 LOWER RH MPS NOZ.              (AUFC01)   ( 17 NOV 73  )
              REFERENCE DATA                                                                      PARAMETRIC DATA

SREF  =    49.4000 SQ.FT.   XMRP  =   158.0000 INCHES
                                                                              BETA   =     .000   POWER  =      .000
LREF  =    90.7000 INCHES   YMRP  =      .0000 INCHES
                                                                              GP1    =   11.000   GY1    =    -9.000
BREF  =    90.7000 INCHES   ZMRP  =      .0000 INCHES
                                                                              GP2    =     .000   GY2    =    -9.000
SCALE =      .0190 SCALE
                                                                              GP3    =     .000   GY3    =      .000

 MACH NO.      .901
                         SECTION( 1)   LOWER RH MPS NOZ.                  SECTION LIMITS     .000 /   1.000

                                                 DCNMDX

 X/DE      GRADIENT  ALPHA       -8.0880     -4.0490      .0130      4.0050     6.0060

   .058     -.0416                 .1865       .1686      .1471       .1489      .1533
   .232     -.0303                 .1373       .1228      .1101       .1038      .1120
   .406     -.0037                 .0190       .0149      .0249       .0233      .0212
   .580     -.0008                -.0091       .0031      .0022       .0124      .0086
   .754      .0004                -.0034      -.0016     -.0011      -.0036     -.0010
   .928     -.0017                 .0085       .0070      .0061       .0063      .0135
```

```
                                                                                              PAGE  498
DATE 05 NOV 75          TABULATED DATA FOR CAL T14-053 (IA36)
                                 CAL T14-053 IA36 02 + T1 + S1 LOWER RH MPS NOZ.        (AUFC01)   ( 17 NOV 73
                                                                                        PARAMETRIC DATA
            REFERENCE DATA

SPEF  =     49.4000 SQ.FT.   XMPP  =   158.0000 INCHES                      BETA   =     .000   POWER  =    .000
LREF  =     90.7000 INCHES   YMPP  =      .0000 INCHES                      GP1    =   11.000   GY1    =  -9.000
BREF  =     90.7000 INCHES   ZMPP  =      .0000 INCHES                      GP2    =     .000   GY2    =    .000
SCALE =       .0190 SCALE                                                   GP3    =     .000   GY3    =    .000

 MACH NO.      .901                                                       SECTION LIMITS    .000     1.000
                        SECTION( 1)    LOWER RH MPS NOZ.
                                                 DCY/DX

 X/DE       GRADIENT  ALPHA       -8.0880     -4.0490      .0130      4.0050      6.0060

    .058      .0376                -.1491      -.1524      -.1333     -.1442      -.1421
    .232      .0615                -.2440      -.2489      -.2336     -.2501      -.2507
    .406      .0296                -.0983      -.1197      -.1197     -.1295      -.1219
    .580     -.0032                 .0033       .0129       .0154      .0041       .0146
    .754     -.0015                 .0056       .0061       .0151      .0150       .0161
    .928     -.0012                 .0056       .0047       .0048      .0065       .0062
```

CAL T14-053 IA36 02 + T1 + S1 LOWER RH MPS NOZ. (AUFC01) (17 NOV 73)

REFERENCE DATA

SREF = 49.4000 SQ.FT. XMRP = 158.0000 INCHES
LREF = 90.7000 INCHES YMRP = .0000 INCHES
BREF = 90.7000 INCHES ZMRP = .0000 INCHES
SCALE = .0190 SCALE

PARAMETRIC DATA

BETA = .000 POWER = .000
GP1 = 11.000 GY1 = -9.000
GP2 = .000 GY2 = -9.000
GP3 = .000 GY3 = .000

MACH NO. .901

SECTION(1) LOWER RH MPS NOZ. SECTION LIMITS .000 / 1.000

DCYNDX

X/DE	GRADIENT	ALPHA	-8.0880	-4.0490	.0130	4.0050	6.0060
.058	-.0634		.2510	.2566	.2245	.2428	.2393
.232	-.0028		.3684	.3759	.3528	.3776	.3786
.406	-.0395		.1314	.1599	.1599	.1730	.1628
.580	.0037		-.0018	-.0150	-.0179	-.0047	-.0169
.754	.0015		-.0015	-.0060	-.0149	-.0148	-.0159
.920	.0009		-.0045	-.0038	-.0039	-.0053	-.0051

```
DATE 05 NOV 75              TABULATED DATA FOR CAL T14-053 (IA36)                                                                PAGE  499

                                         CAL T14-053 IA36 O2 + T1 + S1 LOWER RH MPS NOZ.                        (AJFC02)    ( 17 NOV 73  )

                   REFERENCE DATA                                                                                    PARAMETRIC DATA

SREF  =     49.4000 SQ.FT.   XMRP  =   158.0000 INCHES                                ALPHA   =         .000   POWER   =        .000
LREF  =     90.7000 INCHES   YMRP  =       .0000 INCHES                               GP1     =       11.000   GY1     =      -9.000
BREF  =     90.7000 INCHES   ZMRP  =       .0000 INCHES                               GP2     =         .000   GY2     =      -9.000
SCALE =       .0190 SCALE                                                             GP3     =         .000   GY3     =        .000

 MACH NO.       .901                                                                SECTION LIMITS      .000 /    1.000
                              SECTION( 1)    LOWER RH MPS NOZ.

                                                   DCN/DX

X/DE       GRADIENT   BETA          -6.0790     -3.0490       .0000      3.0510      6.0890

   .058       .0281                 -.0724      -.0856      -.0902      -.0812      -.0846
   .232       .0190                 -.0509      -.0580      -.0708      -.0804      -.1021
   .406       .0053                 -.0141      -.0162      -.0158      -.0286      -.0494
   .580       .0004                 -.0022      -.0012      -.0028       .0002      -.0071
   .754       .0000                 -.0010      -.0001       .0017       .0070       .0037
   .928       .0029                 -.0102      -.0088      -.0062      -.0042       .0039
```

```
DATE 05 NOV 75            TABULATED DATA FOR CAL T14-053 (IA36)                                                          PAGE  499

                                    CAL T14-053 IA36 02 + T1 + S1 LOWER RH MPS NOZ.                (AUFC02)    ( 17 NOV 73  )

                REFERENCE DATA                                                                          PARAMETRIC DATA

SREF  =     49.4000 SQ.FT.   XMRP  =   158.0000 INCHES
                                                                                  ALPHA  =      .000   POWER  =       .000
LREF  =     90.7000 INCHES   YMRP  =      .0000 INCHES
                                                                                  GP1    =    11.000   GY1    =    -9.000
BREF  =     90.7000 INCHES   ZMRP  =      .0000 INCHES
                                                                                  GP2    =      .000   GY2    =    -9.000
SCALE =       .0190 SCALE
                                                                                  GP3    =      .000   GY3    =       .000

 MACH NO.       .901
                           SECTION( 1)    LOWER RH MPS NOZ.                    SECTION LIMITS      .000 /   1.000

                                                    DCNMDX

 X/DE        GRADIENT  BETA          -6.0790     -3.0490       .0000      3.0510      6.0890

     .058     -.0473                   .1218       .1442       .1519       .1367       .1425
     .232     -.0287                   .0769       .0876       .1070       .1214       .1541
     .406     -.0071                   .0188       .0217       .0211       .0382       .0650
     .580     -.0005                   .0025       .0014       .0032     -.0002       .0083
     .754     -.0000                   .0010       .0001     -.0016     -.0069     -.0036
     .928     -.0023                   .0083       .0072       .0051       .0034     -.0031
```

```
DATE 05 NOV 75          TABULATED DATA FOR CAL T14-053 (IA36)                                            PAGE  500

                                        CAL T14-053 IA36 02 + T1 + S1 LOWER RH MPS NOZ.          (AUFC02)   ( 17 NOV 75

                 REFERENCE DATA                                                                   PARAMETRIC DATA

SPEF  =    49.0000 SQ.FT.   XMRP  =   158.0000 INCHES                         ALPHA  =      .000  POWER  =       .000
LREF  =    90.7000 INCHES   YMRP  =      .0000 INCHES                         GP1    =    11.000  GY1    =     -9.000
BREF  =    90.7000 INCHES   ZMRP  =      .0000 INCHES                         GP2    =      .000  GY2    =     -9.000
SCALE =      .0190 SCALE                                                      GP3    =      .000  GY3    =       .000

 MACH NO.      .901
                       SECTION( 1)    LOWER RH MPS NOZ.                    SECTION LIMITS     .000 /   1.000

                                               DCY/DX

 X/DE       GRADIENT  BETA       -6.0790    -3.0490      .0000     3.0510     6.0890

   .058       .0399               -.1147     -.1215     -.1307     -.1555     -.1756
   .232       .0631               -.1754     -.1923     -.2358     -.2926     -.3490
   .406       .0303               -.0641     -.0922     -.1134     -.1630     -.2335
   .580      -.0023                .0138      .0070      .0087      .0098     -.0035
   .754      -.0015                .0086      .0044      .0125      .0176      .0209
   .928      -.0003                .0048      .0009      .0075      .0059      .0056
```

```
DATE 05 NOV 75              TABULATED DATA FOR CAL T14-053 (IA36)                                                         PAGE  501

                                        CAL T14-053 IA36 02 + T1 + S1 LOWER RH MPS NOZ.                (AUFC02)   ( 17 NOV 73  )

              REFERENCE DATA                                                                             PARAMETRIC DATA

SREF  =   49.4000 SQ.FT.  XMRP  =   158.0000 INCHES
                                                                                         ALPHA  =      .000   POWER  =      .000
LREF  =   90.7000 INCHES  YMRP  =      .0000 INCHES
                                                                                         GP1    =    11.000   GY1    =    -9.000
BREF  =   90.7000 INCHES  ZMRP  =      .0000 INCHES
                                                                                         GP2    =      .000   GY2    =    -9.000
SCALE =     .0190 SCALE
                                                                                         GP3    =      .000   GY3    =      .000

 MACH NO.       .901
                                SECTION( 1)   LOWER RH MPS NOZ.                         SECTION LIMITS      .000 /   1.000

                                                  DCYNOX

 X/DE       GRADIENT  BETA          -6.0790    -3.0490      .0000     3.0510     6.0890

    .058     -.0611                   .1931      .2047      .2202      .2618      .2957
    .232     -.0953                   .2664      .2904      .3575      .4418      .5255
    .406     -.0404                   .0856      .1232      .1515      .2178      .3120
    .580      .0027                  -.0161     -.0082     -.0101     -.0114      .0041
    .754      .0014                  -.0085     -.0044     -.0124     -.0174     -.0207
    .928      0003                   -.0039     -.0008     -.0061     -.0048     -.0045
```

```
                          CAL T14-053 IA36 02 + T1 + S1 LOWER RH MPS NOZ.                 (AUFC03)    ( 17 NOV 73

             REFERENCE DATA                                                                 PARAMETRIC DATA

SREF  =    49.4000 SQ.FT.   XMRP  =   158.0000 INCHES
                                                                              BETA  =      .000   POWER  =     1.000
LREF  =    90.7000 INCHES   YMRP  =      .0000 INCHES
                                                                              OPR   =    35.200   SRMPR  =     2.330
BREF  =    90.7000 INCHES   ZMRP  =      .0000 INCHES
                                                                              GP1   =    11.000   GY1    =    -9.000
SCALE =      .0190 SCALE
                                                                              GP2   =      .000   GY2    =    -9.000
                                                                              GP3   =      .000   GY3    =    -9.000
 MACH NO.      .897
                     SECTION( 1)    LOWER RH MPS NOZ.                     SECTION LIMITS      .000 /    1.000

                                              DCN/DX

 X/DE      GRADIENT  ALPHA        -8.0880    -4.0380      .0010     4.0260     6.0210

   .058      .0232                -.1150     -.0936     -.0855     -.0919     -.0957
   .232      .0204                -.0742     -.0824     -.0796     -.0782     -.0722
   .406      .0070                -.0181     -.0282     -.0378     -.0395     -.0337
   .580      .0002                -.0049     -.0007     -.0101     -.0089     -.0142
   .754     -.0019                 .0051      .0076      .0053      .0081      .0081
   .928     -.0013                -.0103      .0054     -.0009      .0029     -.0065
```

REPRODUCIBILITY OF THE
ORIGINAL PAGE IS POOR

```
                              CAL T14-053 IA36 O2 + T1 + S1 LOWER RH MPS NOZ.          (AUFC03)   ( 17 NOV 73  )

          REFERENCE DATA                                                                      PARAMETRIC DATA

SREF  =    49.4000 SQ.FT.   XMRP  =   158.0000 INCHES
                                                                        BETA    =      .000   POWER  =     1.000
LREF  =    90.7000 INCHES   YMRP  =      .0000 INCHES
                                                                        OPR     =    36.200   SRMPR  =     2.330
BREF  =    90.7000 INCHES   ZMRP  =      .0000 INCHES
                                                                        GP1     =    11.000   GY1    =    -9.000
SCALE =      .0190 SCALE
                                                                        GP2     =      .000   GY2    =    -9.000
                                                                        GP3     =      .000   GY3    =    -9.000

 MACH NO.      .897
                         SECTION( 1)    LOWER RH MPS NOZ.              SECTION LIMITS     .000 /   1.000

                                           DCNMDX

 X/DE      GRADIENT  ALPHA    -8.0880    -4.0380     .0010    4.0260    6.0210

   .058     -.0390               .1954      .1576     .1439     .1548     .1612
   .232     -.0308               .1120      .1244     .1201     .1181     .1090
   .406     -.0093               .0241      .0377     .0505     .0528     .0451
   .580     -.0002               .0057      .0008     .0118     .0103     .0165
   .754      .0019              -.0051     -.0075    -.0053    -.0080    -.0080
   .928      .0011               .0084     -.0044     .0007    -.0024     .0053
```

```
                                                                                                              PAGE  504
DATE 05 NOV 75            TABULATED DATA FOR CAL T14-053 (IA36)
                                                                                              (AUFC03)    ( 17 NOV 73  )
                                        CAL T14-053 IA36 02 + T1 + S1 LOWER RH MPS NOZ.
                                                                                                 PARAMETRIC DATA
                  REFERENCE DATA

SREF  =     49.4000 SQ.FT.   XMRP  =   158.0000 INCHES                           BETA   =      .000   POWER  =     1.000
LREF  =     90.7000 INCHES   YMRP  =      .0000 INCHES                           OPR    =    35.200   SRMPR  =     2.330
BREF  =     90.7000 INCHES   ZMRP  =      .0000 INCHES                           GP1    =    11.000   GY1    =    -9.000
SCALE =       .0190 SCALE                                                        GP2    =      .000   GY2    =    -9.000
                                                                                 GP3    =      .000   GY3    =    -9.000

 MACH NO.      .897                                                         SECTION LIMITS     .000 /    1.000
                          SECTION( 1)    LOWER RH MPS NOZ.

                                                  DCY/DX

 X/DE      GRADIENT  ALPHA         -8.0880     -4.0380      .0010      4.0260      6.0210

  .058       .0288                 -.1288      -.1153     -.0990      -.1204      -.1219
  .232       .0771                 -.3193      -.3115     -.3017      -.3223      -.3220
  .406       .0388                 -.1342      -.1567     -.1712      -.1745      -.1695
  .580      -.0025                  .0015       .0099      .0083       .0040       .0058
  .754      -.0028                  .0103       .0114      .0130       .0184       .0182
  .928       .0004                  .0028      -.0016     -.0020      -.0006       .0027
```

```
                                        CAL T14-053 IA36 02 + T1 + S1 LOWER RH MPS NOZ.            (AUFC03)   ( 17 NOV 73  )

                 REFERENCE DATA                                                                          PARAMETRIC DATA

SREF   =    49.4000 SQ.FT.   XMRP   =   158.0000 INCHES
                                                                                    BETA    =      .000   POWER   =     1.000
LREF   =    90.7000 INCHES   YMRP   =      .0000 INCHES
                                                                                    OPR     =    36.200   SRMPR   =     2.330
BREF   =    90.7000 INCHES   ZMRP   =      .0000 INCHES
                                                                                    GP1     =    11.000   GY1     =    -9.000
SCALE =       .0190 SCALE
                                                                                    GP2     =      .000   GY2     =    -9.000
                                                                                    GP3     =      .000   GY3     =    -9.000
 MACH NO.       .897
                           SECTION( 1)    LOWER RH MPS NOZ.                       SECTION LIMITS      .000 /    1.000

                                                     DCYNDX

 X/DE       GRADIENT  ALPHA      -8.0880     -4.0380       .0010      4.0260      6.0210

   .058      -.0485                .2169       .1958       .1668       .2028       .2053
   .232      -.1165                .4822       .4703       .4555       .4867       .4861
   .406      -.0518                .1793       .2093       .2288       .2331       .2264
   .580       .0029               -.0018      -.0115      -.0096      -.0046      -.0068
   .754       .0028               -.0102      -.0113      -.0128      -.0182      -.0179
   .928      -.0003               -.0023       .0013       .0017       .0005      -.0022
```

```
                                                                                                              PAGE  505
DATE 05 NOV 75            TABULATED DATA FOR CAL T14-053 (IA36)
                                                                                             (AUFC04)    ( 17 NOV 73  )
                                     CAL T14-053 IA36 O2 + T1 + S1 LOWER RH MPS NOZ.
                                                                                             PARAMETRIC DATA
                  REFERENCE DATA

SREF   =    49.4000 SQ.FT.   XMRP  =   158.0000 INCHES                         ALPHA  =      .000   POWER  =     1.000
LREF   =    90.7000 INCHES   YMRP  =       .0000 INCHES                        OPR    =    36.200   SRMPR  =     2.330
BREF   =    90.7000 INCHES   ZMRP  =       .0000 INCHES                        GP1    =    11.000   GY1    =    -9.000
SCALE =       .0190 SCALE                                                      GP2    =      .000   GY2    =    -9.000
                                                                               GP3    =      .000   GY3    =    -9.000

  MACH NO.       .899                                                       SECTION LIMITS     .000 /   1.000
                             SECTION( 1)    LOWER RH MPS NOZ.
                                                 DCN/DX
                                      -6.0780     -3.0490       .0000      3.0510      6.0880
 X/DE        GRADIENT  BETA
                                       -.1348      -.1156      -.0886      -.0515      -.0341
   .058         .0379                  -.0844      -.0747      -.0723      -.0661      -.0620
   .232         .0245                  -.0375      -.0381      -.0367      -.0442      -.0570
   .406         .0125                  -.0200      -.0190      -.0072      -.0157      -.0161
   .580         .0062                  -.0040       .0028       .0082       .0067      -.0004
   .754        -.0009                  -.0106      -.0036      -.0019       .0031       .0026
   .928         .0012
```

```
                              CAL T14-053 IA36 O2 + T1 + S1 LOWER RH MPS NOZ            (AUFC04)   ( 17 NOV 73  )

               REFERENCE DATA                                                                PARAMETRIC DATA

SREF   =     49.4000 SQ.FT.   XMRP  =   158.0000 INCHES
                                                                   ALPHA  =      .000   POWER  =     1.000
LREF   =     90.7000 INCHES   YMRP  =      .0000 INCHES
                                                                   OPR    =    36.200   SRMPR  =     2.330
BREF   =     90.7000 INCHES   ZMRP  =      .0000 INCHES
                                                                   GP1    =    11.000   GY1    =    -9.000
SCALE  =       .0190 SCALE
                                                                   GP2    =      .000   GY2    =    -9.000
                                                                   GP3    =      .000   GY3    =    -9.000

 MACH NO.      .899
                        SECTION( 1)   LOWER RH MPS NOZ.                   SECTION LIMITS     .000 /   1.000

                                               DCNMDX

 X/DE      GRADIENT  BETA         -6.0780   -3.0490     .0000    3.0510    6.0880

    .058    -.0639                  .2269     .1947     .1492     .0868     .0575
    .232    -.0370                  .1274     .1128     .1092     .0998     .0937
    .406    -.0167                  .0501     .0509     .0490     .0590     .0762
    .580    -.0072                  .0232     .0221     .0083     .0182     .0187
    .754     .0009                  .0039    -.0028    -.0081    -.0066     .0004
    .928    -.0010                  .0086     .0029     .0015    -.0025    -.0021
```

```
                                         CAL T14-053 IA36 C2 + T1 + S1 LOWER RH MPS NOZ.               (AUFC04)    ( 17 NOV 73  )

                 REFERENCE DATA                                                                            PARAMETRIC DATA

SREF  =    49.4000 SQ.FT.   XMRP  =   158.0000 INCHES                                     ALPHA  =      .000   POWER  =      1.000
LREF  =    90.7000 INCHES   YMRP  =      .0000 INCHES                                     OPR    =    36.200   SRMPR  =      2.330
BREF  =    90.7000 INCHES   ZMRP  =      .0000 INCHES                                     GP1    =    11.000   GY1    =     -9.000
SCALE =      .0190 SCALE                                                                  GP2    =      .000   GY2    =     -9.000
                                                                                          GP3    =      .000   GY3    =     -9.000

 MACH NO.       .899                                                                   SECTION LIMITS     .000 /   1.000
                               SECTION( 1)    LOWER RH MPS NOZ.

                                                  DCY/DX

 X/DE        GRADIENT  BETA          -6.0780    -3.0490      .0000     3.0510     6.0880

    .058        .0254                -.0904     -.0774     -.0980     -.1451     -.1765
    .232        .0819                -.2602     -.2496     -.3017     -.3626     -.4005
    .406        .0448                -.1307     -.1367     -.1553     -.2413     -.3169
    .580       -.0023                 .0074      .0070      .0074     -.0062     -.0252
    .754       -.0033                 .0069      .0100      .0134      .0185      .0160
    .928        .0003                 .0002     -.0009     -.0015     -.0002      .0068
```

```
DATE 05 NOV 75          TABULATED DATA FOR CAL T14-053 (IA36)                                           PAGE  509

                                   CAL T14-053 IA36 02 + T1 + S1 LOWER RH MPS NOZ.             (AUFC04)   ( 17 NOV 73  )

             REFERENCE DATA                                                                        PARAMETRIC DATA

SREF  =     49.4000 SQ.FT.   XMRP  =   158.0000 INCHES
                                                                               ALPHA   =      .000   POWER   =      1.000
LREF  =     90.7000 INCHES   YMRP  =      .0000 INCHES
                                                                               OPR     =    36.200   SRMPR   =      2.330
BREF  =     90.7000 INCHES   ZMRP  =      .0000 INCHES
                                                                               GP1     =    11.000   GY1     =     -9.000
SCALE =       .0190 SCALE
                                                                               GP2     =      .000   GY2     =     -9.000
                                                                               GP3     =      .000   GY3     =     -9.000

 MACH NC.       .899
                              SECTION( 1)    LOWER RH MPS NOZ.                         SECTION LIMITS      .000 /    1.000

                                                 DCYNDX

 X/DE      GRADIENT  BETA          -6.0780     -3.0490       .0000      3.0510      6.0880

   .058     -.0429                   .1522       .1304       .1650       .2443       .2972
   .232     -.1236                   .3930       .3769       .4555       .5475       .6048
   .406     -.0599                   .1745       .1826       .2208       .3223       .4233
   .580      .0027                  -.0086      -.0081      -.0086       .0072       .0293
   .754      .0032                  -.0068      -.0099      -.0133      -.0183      -.0158
   .928     -.0002                  -.0001       .0007       .0012       .0002      -.0055
```

```
DATE 05 NOV 75          TABULATED DATA FOR CAL T14-053 (IA36)

                              CAL T14-053 IA36 O2 + T1 + S1 LOWER RH MPS NOZ.                    (AUFC05)   ( 17 NOV 73  )

              REFERENCE DATA                                                                  PARAMETRIC DATA

SREF  =    49.4000 SQ.FT.   XMRP  =   158.0000 INCHES
                                                                         BETA   =     .000   POWER  =      .000
LREF  =    90.7000 INCHES   YMRP  =      .0000 INCHES
                                                                         GP1    =   11.000   GY1    =    -9.000
BREF  =    90.7000 INCHES   ZMRP  =      .0000 INCHES
                                                                         GP2    =     .000   GY2    =    -9.000
SCALE =      .0190 SCALE
                                                                         GP3    =     .000   GY3    =      .000

 MACH NO.     1.203
                         SECTION( 1)    LOWER RH MPS NOZ.                SECTION LIMITS     .000 /   1.000

                                                  DCN/DX

X/DE        GRADIENT  ALPHA       -8.1010    -4.0380     -.0110     4.0030     6.0180

  .058        .0376               -.2100     -.1518     -.1167     -.0919     -.0739
  .232        .0299               -.1615     -.1208     -.0822     -.0561     -.0353
  .406        .0102               -.0754     -.0413     -.0205     -.0117     -.0077
  .580        .0072               -.0433     -.0291     -.0164     -.0092     -.0134
  .754       -.0003                .0024      .0013      .0004     -.0009      .0014
  .928        .0017               -.0029     -.0068     -.0099     -.0097     -.0098
```

```
                                        CAL T14-053 IA36 O2 + T1 + S1 LOWER RH MPS NOZ.              (AUFC05)    ( 17 NOV 73  )

           REFERENCE DATA                                                                         PARAMETRIC DATA

SREF  =   49.4000 SQ.FT.   XMRP  =   158.0000 INCHES
                                                                                    BETA    =      .000   POWER  =      .000
LREF  =   90 7000 INCHES   YMRP  =      .0000 INCHES
                                                                                    GP1     =    11.000   GY1    =    -9.000
BREF  =   90.7000 INCHES   ZMRP  =      .0000 INCHES
                                                                                    GP2     =      .000   GY2    =    -9.000
SCALE =     .0190 SCALE
                                                                                    GP3     =      .000   GY3    =      .000

 MACH NO.      1.203
                               SECTION( 1)    LOWER RH MPS NOZ.                  SECTION LIMITS      .000 /    1.000

                                                     DCNMOX

 X/DE      GRADIENT  ALPHA      -8.1010     -4.0380     -.0110      4.0030     6.0180

   .058     -.0633                .3536       .2556      .1965       .1547      .1245
   .232     -.0452                .2439       .1824      .1241       .0847      .0533
   .406     -.0137                .1007       .0552      .0274       .0157      .0103
   .580     -.0084                .0503       .0339      .0191       .0107      .0155
   .754      .0003               -.0023      -.0013     -.0004       .0009     -.0014
   .928     -.0014                .0024       .0055      .0080       .0079      .0079
```

```
DATE 05 NOV 75          TABULATED DATA FOR CAL T14-053 (IA36)                                              PAGE  512

                                CAL T14-053 IA36 02 + T1 + S1 LOWER RH MPS NOZ.                  (AUFC05)   ( 17 NOV 73  )

               REFERENCE DATA                                                                         PARAMETRIC DATA

SPEF  =    49.4000 SQ.FT.   XMRP  =   158.0000 INCHES                            BETA   =      .000  POWER  =      .000
LPEF  =    90.7000 INCHES   YMRP  =      .0000 INCHES                            GP1    =    11.000  GY1    =    -9.000
BREF  =    90.7000 INCHES   ZMRP  =      .0000 INCHES                            GP2    =      .000  GY2    =    -9.000
SCALE =      .0190 SCALE                                                         GP3    =      .000  GY3    =      .000

 MACH NO.      1.203
                          SECTION( 1)    LOWER RH MPS NOZ.                      SECTION LIMITS      .000 /   1.000

                                               DCY/DX

 X/DE       GRADIENT  ALPHA      -8.1010    -4.0380     -.0110     4.0030     6.0180

   .058       .0538               -.2884     -.2576     -.2130     -.1999     -.1860
   .232       .0769               -.3761     -.3107     -.2583     -.2207     -.1970
   .406       .0334               -.1941     -.1350     -.0934     -.0633     -.0481
   .580      -.0025                .0147      .0103      .0075      .0093      .0090
   .754      -.0021                .0087      .0086      .0038      .0052      .0049
   .928      -.0018                .0053      .0075      .0066      .0050      .0064
```

```
DATE 05 NOV 75            TABULATED DATA FOR CAL T14-053 (IA36)                                           PAGE  513
                                    CAL T14-053 IA36 O2 + T1 + S1 LOWER RH MPS NOZ.             (AUFC05)   ( 17 NOV 73  )

                REFERENCE DATA                                                              PARAMETRIC DATA

SREF  =    49.4000 SQ.FT.   XMRP  =   158.0000 INCHES
                                                                     BETA   =      .000  POWER  =      .000
LREF  =    90.7000 INCHES   YMRP  =      .0000 INCHES
                                                                     GP1    =    11.000  GY1    =    -9.000
BREF  =    90.7000 INCHES   ZMRP  =      .0000 INCHES
                                                                     GP2    =      .000  GY2    =    -9.000
SCALE =      .0190 SCALE
                                                                     GP3    =      .000  GY3    =      .000

 MACH NO.    1.203
                        SECTION( 1)    LOWER RH MPS NOZ.                  SECTION LIMITS    .000 /   1.000

                                         DCYNDX

 X/DE      GRADIENT  ALPHA       -8.1010    -4.0380     -.0110     4.0030     6.0180

   .058     -.1074                 .4856      .4338      .3587      .3367      .3132
   .232     -.1162                 .5678      .4691      .3900      .3333      .2974
   .406     -.0447                 .2593      .1804      .1248      .0845      .0643
   .580      .0030                -.0171     -.0119     -.0087     -.0109     -.0104
   .754      .0021                -.0086     -.0085     -.0038     -.0051     -.0049
   .928      .0015                -.0043     -.0061     -.0054     -.0041     -.0052
```

REPRODUCIBILITY OF THE
ORIGINAL PAGE IS POOR

```
DATE 05 NOV 75          TABULATED DATA FOR CAL T14-053 (IA36)                                                   PAGE  514

                                  CAL T14-053 IA36 O2 + T1 + S1 LOWER RH MPS NOZ.                  (AUFC06)   ( 17 NOV 73  )

              REFERENCE DATA                                                                        PARAMETRIC DATA

SREF  =    49.4000 SQ.FT.   XMRP  =   158.0000 INCHES                            ALPHA  =      .000   POWER  =      .000
LREF  =    90.7000 INCHES   YMRP  =      .0000 INCHES                            GP1    =    11.000   GY1    =    -9.000
BREF  =    90.7000 INCHES   ZMRP  =      .0000 INCHES                            GP2    =      .000   GY2    =    -9.000
SCALE =      .0190 SCALE                                                         GP3    =      .000   GY3    =      .000

 MACH NO.     1.202
                          SEC.ION( 1)   LOWER RH MPS NOZ.                       SECTION LIMITS     .000 /   1.000
                                                    DCN/DX

 X/DE        GRADIENT  BETA         -6.0790    -3.0510      .0000     3.0510     6.0790

    .058       .0284                -.0739     -.0866     -.0719     -.1183     -.1056
    .232       .0161                -.0341     -.0491     -.1491     -.1014     -.1182
    .406       .0024                -.0077     -.0072     -.1551     -.0432     -.0818
    .580      -.0023                -.0128      .0071     -.0101     -.0079     -.0418
    .754       .0011                -.0016     -.0033      .0016      .0025      .0027
    .928       .0028                -.0078     -.0086     -.0097     -.0065     -.0044
```

```
DATE 05 NOV 75            TABULATED DATA FOR CAL T14-053 (IA38)                                          PAGE  515

                               CAL T14-053 IA36 02 + T1 + S1 LOWER RH MPS NOZ.                   (AUFC06)   ( 17 NOV 73  )

          REFERENCE DATA                                                                          PARAMETRIC DATA

SREF  =   49.4000 SQ.FT.   XMRP  =  158.0000 INCHES
                                                                              ALPHA  =     .000   POWER  =     .000
LREF  =   90.7000 INCHES   YMRP  =     .0000 INCHES
                                                                              GP1    =   11.000   GY1    =   -9.000
BREF  =   90.7000 INCHES   ZMRP  =     .0000 INCHES
                                                                              GP2    =     .000   GY2    =   -9.000
SCALE =     .0190 SCALE
                                                                              GP3    =     .000   GY3    =     .000

 MACH NO.     1.202
                        SECTION( 1)    LOWER RH MPS NOZ.                   SECTION LIMITS     .000 /   1.000

                                                  DCNMDX

X/DE       GRADIENT  BETA        -6.0790    -3.0510      0000     3.0510     6.0790

   .058     -.0478                 .1245      .1458     .1211      .1993      .1778
   .232     -.0243                 .0515      .0741     .2252      .1531      .1784
   .406     -.0032                 .0103      .0097     .2072      .0577      .1093
   .580      .0027                 .0149     -.0083     .0117      .0091      .0486
   .754     -.0011                 .0016      .0032    -.0016     -.0024     -.0027
   .928     -.0023                 .0063      .0070     .0079      .0053      .0036
```

```
                                  CAL T14-053 IA36 02 + T1 + S1 LOWER RH MPS NOZ.          (AUFC06)   ( 17 NOV 73  )

              REFERENCE DATA                                                                 PARAMETRIC DATA

SREF  =    49.4000 SQ.FT.   XMRP  =   158.0000 INCHES
                                                                       ALPHA  =      .000   POWER  =      .000
LREF  =    90.7000 INCHES   YMRP  =      .0000 INCHES                  GP1    =    11.000   GY1    =    -9.000
BREF  =    90.7000 INCHES   ZMRP  =      .0000 INCHES                  GP2    =      .000   GY2    =    -9.000
SCALE =      .0190 SCALE                                               GP3    =      .000   GY3    =      .000

 MACH NO.     1.202
                         SECTION( 1)    LOWER RH MPS NOZ.                     SECTION LIMITS     .000 /   1.000
                                                 DCY/DX

 X/DE     GRADIENT  BETA        -6.0790    -3.0510      .0000     3.0510     6.0790

   .058     .0554                -.1534     -.1689     -.1272     -.2656     -.3025
   .232     .0617                -.1558     -.1883     -.2789     -.3244     -.3759
   .406     .0139                -.0288     -.0423     -.0885     -.1582     -.2290
   .580    -.0015                 .0067      .0046      .0062     -.0039     -.0050
   .754    -.0008                 .0017      .0024      .0064      .0073      .0102
   .928    -.0013                 .0028      .0041      .0047      .0050      .0065
```

```
DATE 05 NOV 75             TABULATED DATA FOR CAL T14-053 (IA36)                                                   PAGE  517
                                         CAL T14-053 IA36 O2 + T1 + S1 LOWER RH MPS NOZ.                (AUFC06)   ( 17 NOV 73  )

              REFERENCE DATA                                                                              PARAMETRIC DATA

SREF  =    49.4000 SQ.FT.   XMRP  =   158.0000 INCHES
                                                                                 ALPHA   =      .000   POWER   =      .000
LREF  =    90.7000 INCHES   YMRP  =      .0000 INCHES
                                                                                 GP1     =    11.000   GY1     =    -9.000
BREF  =    90.7000 INCHES   ZMRP  =      .0000 INCHES
                                                                                 GP2     =      .000   GY2     =    -9.000
SCALE =      .0190 SCALE
                                                                                 GP3     =      .000   GY3     =      .000

 MACH NO.      1.202
                             SECTION( 1)    LOWER RH MPS NOZ.                  SECTION LIMITS      .000 /    1.000

                                                     DCYNDX

 X/DE        GRADIENT  BETA        -6.0790    -3.0510      .0000     3.0510     6.0790

   .058       -.0932                 .2584      .2845      .2142      .4472      .5095
   .232       -.0932                 .2353      .2844      .4212      .4898      .5676
   .406       -.0185                 .0385      .0565      .1182      .2114      .3059
   .580        .0017                -.0078     -.0053     -.0072      .0045      .0058
   .754        .0008                -.0017     -.0024     -.0063     -.0072     -.0101
   .928        .0011                -.0023     -.0033     -.0038     -.0041     -.0053
```

```
                                     CAL T14-053 IA36 02 + T1 + S1 LOWER R I MPS NOZ.            (AUFC07)   ( 17 NOV 73  )

              REFERENCE DATA                                                                          PARAMETRIC DATA

SREF  =    49.4000 SQ.FT.   XMRP  =   158.0000 INCHES
                                                                              BETA    =      .000  POWER   =      1.000
LREF  =    90.7000 INCHES   YMRP  =      .0000 INCHES
                                                                              OPR     =    28.310  SRMPR   =      2.020
BREF  =    90.7000 INCHES   ZMRP  =      .0000 INCHES
                                                                              GP1     =    11.000  GY1     =     -9.000
SCALE =      .0190 SCALE
                                                                              GP2     =      .000  GY2     =     -9.000
                                                                              GP3     =      .000  GY3     =     -9.000
 MACH NO.     1.199
                        SECTION( 1)   LOWER RH MPS NOZ.                     SECTION LIMITS    .000 /   1.000

                                             DCN/DX

 X/DE     GRADIENT  ALPHA      -8.1080    -4.0750    -.0230     4.0170     8.0280

   .058    .0084               -.0666     -.0344     -.0033     -.1417     -.1290
   .232    .0082               -.0526     -.0335     -.0294     -.0153     -.0060
   .406    .0025               -.0293     -.0103     -.0049      .0191      .0186
   .580    .0013               -.0203     -.0054      .0089     -.0128     -.0134
   .754   -.0011                .0081      .0043     -.0010      .0012     -.0000
   .928    .0026               -.0013     -.0104     -.0077      .0016     -.0004
```

OF THE
IS POOR

```
                                    CAL T14-053 IA36 O2 + T1 + S1 LOWER RH MPS NOZ.           (AUFC07)  ( 17 NOV 73  )

              REFERENCE DATA                                                                   PARAMETRIC DATA

SREF  =    49.4000 SQ.FT.  XMRP  =  158.0000 INCHES
                                                                            BETA   =     .000  POWER  =    1.000
LREF  =    90.7000 INCHES  YMRP  =     .0000 INCHES
                                                                            OPR    =   28.310  SRMPR  =    2.020
BREF  =    90.7000 INCHES  ZMRP  =     .0000 INCHES
                                                                            GP1    =   11.000  GY1    =   -9.000
SCALE =      .0190 SCALE
                                                                            GP2    =     .000  GY2    =   -9.000
                                                                            GP3    =     .000  GY3    =   -9.000

 MACH NO.     1.199
                          SECTION( 1)   LOWER RH MPS NOZ.                  SECTION LIMITS    .000 /   1.000

                                         DCNMDX

 X/DE      GRADIENT  ALPHA       -8.1080    -4.0750     -.0230     4.0170     6.0280

    .058    -.0142                 .1122      .0579      .0056      .2386      .2172
    .232    -.0124                 .0794      .0506      .0444      .0231      .0091
    .406    -.0034                 .0392      .0137      .0066     -.0255     -.0248
    .580    -.0015                 .0236      .0063     -.0103      .0149      .0156
    .754     .0011                -.0080     -.0043      .0010     -.0011      .0000
    .928    -.0021                 .0011      .0085      .0063     -.0013      .0003
```

```
                                   CAL T14-053 IA36 O2 + T1 + S1 LOWER RH MPS NOZ.            (AUFC07)    ( 17 NOV 73  )

            REFERENCE DATA                                                                    PARAMETRIC DATA

SREF  =    49.4000 SQ.FT.   XMRP  =   158.0000 INCHES
                                                                          BETA   =      .000   POWER  =     1.000
LREF  =    90.7000 INCHES   YMRP  =      .0000 INCHES
                                                                          OPR    =    28.310   SRMPR  =     2.020
BREF  =    90.7000 INCHES   ZMRP  =      .0000 INCHES
                                                                          GP1    =    11.000   GY1    =    -9.000
SCALE =      .0190 SCALE
                                                                          GP2    =      .000   GY2    =    -9.000
                                                                          GP3    =      .000   GY3    =    -9.000

 MACH NO.     1.199
                          SECTION( 1)    LOWER RH MPS NOZ.                      SECTION LIMITS     .000 /    1.000

                                              DCY/DX

 X/DE       GRADIENT   ALPHA       -8.1080     -4.0750     -.0230      4.0170      6.0280

    .058      .0747                -.3497      -.3043      -.2668      -.2492      -.2152
    .232      .0845                -.4145      -.3445      -.2989      -.2246      -.2200
    .406      .0352                -.2281      -.1434      -.1145      -.1417      -.1208
    .580      .0052                -.0282      -.0211      -.0209      -.0183      -.0249
    .754      .0032                -.0108      -.0128      -.0084      -.0160      -.0096
    .928      .0010                -.0058      -.0039       .0002      -.0030      -.0029
```

```
DATE 05 NOV 75            TABULATED DATA FOR CAL T14-053 (IA36)                                              PAGE  521
                                   CAL T14-053 IA36 O2 + T1 + S1 LOWER RH MPS NOZ.             (AUFC07)   ( 17 NOV 73  )
               REFERENCE DATA                                                                          PARAMETRIC DATA
SREF  =     49.4000 SQ.FT.   XMRP  =   158.0000 INCHES
                                                                                 BETA   =      .000   POWER  =     1.000
LREF  =     90.7000 INCHES   YMRP  =      .0000 INCHES
                                                                                 OPR    =    28.310   SRMPR  =     2.020
BREF  =     90.7000 INCHES   ZMRP  =      .0000 INCHES
                                                                                 GP1    =    11.000   GY1    =    -9.000
SCALE =       .0190 SCALE
                                                                                 GP2    =      .000   GY2    =    -9.000
                                                                                 GP3    =      .000   GY3    =    -9.000
 MACH NO.     1.199
                       SECTION( 1)    LOWER RH MPS NOZ.                     SECTION LIMITS     .000 /    1.000

                                             DCYNDX

 X/DE        GRADIENT  ALPHA       -8.1080     -4.0750     -.0230      4.0170      6.0280

    .058      -.1253                 .5890       .5125      .4492       .4196       .3624
    .232      -.1276                 .6259       .5201      .4514       .3392       .3323
    .406      -.0470                 .3048       .1915      .1529       .1893       .1613
    .580      -.0060                 .0327       .0246      .0243       .0212       .0290
    .754      -.0031                 .0107       .0127      .0083       .0158       .0095
    .928      -.0008                 .0047       .0032     -.0002       .0024       .0024
```

```
DATE 05 NOV 75          TABULATED DATA FOR CAL T14-053 (IA36)                                                    PAGE  522
                                  CAL T14-053 IA36 O2 + T1 + S1 LOWER RH MPS NOZ.                  (AUFC08)   ( 17 NOV 73  )

                REFERENCE DATA                                                                         PARAMETRIC DATA

SREF  =    49.4000 SQ.FT.   XMRP  =   158.0000 INCHES
                                                                               ALPHA  =       .000   POWER  =     1.000
LREF  =    90.7000 INCHES   YMRP  =      .0000 INCHES
                                                                               OPR    =     28.310   SRMPR  =     2.020
BREF  =    90.7000 INCHES   ZMRP  =      .0000 INCHES
                                                                               GP1    =     11.000   GY1    =    -9.000
SCALE =      .0190 SCALE
                                                                               GP2    =       .000   GY2    =    -9.000
                                                                               GP3    =       .000   GY3    =    -9.000

 MACH NO.      1.194
                           SECTION( 1)    LOWER RH MPS NOZ.                SECTION LIMITS      .000 /    1.000

                                              DCN/DX

 X/DE       GRADIENT  BETA          -6.0740     -3.0440      .0000      3.0490      6.0790

    .058      .0747                   .0143     -.2272     -.0076       .0230      -.0266
    .232      .0062                   .0223     -.0187     -.0221      -.0267      -.0641
    .406     -.0129                   .0208      .0392     -.0056      -.0065      -.0329
    .580     -.0019                   .0121      .0059      .0050      -.0022      -.0056
    .754     -.0018                   .0084      .0056      .0018       .0183       .0097
    .928      .0003                   .0015     -.0008     -.0048       .0100       .0033
```

```
                                CAL T14-053 IA36 02 + T1 + S1 LOWER RH MPS NOZ.        (AUTCOB)   ( 17 NOV 73  )

                 REFERENCE DATA                                                                  PARAMETRIC DATA

SREF  =    49.4000 SQ.FT.   XMRP  =   158.0000 INCHES
                                                                          ALPHA  =      .000   POWER  =     1.000
LREF  =    90.7000 INCHES   YMRP  =      .0000 INCHES
                                                                          OPR    =    28.310   SRMPR  =     2.020
BREF  =    90.7000 INCHES   ZMRP  =      .0000 INCHES
                                                                          GP1    =    11.000   GY1    =    -9.000
SCALE =      .0190 SCALE
                                                                          GP2    =      .000   GY2    =    -9.000
                                                                          GP3    =      .000   GY3    =    -9.000

 MACH NO.     1.194
                          SECTION( 1)   LOWER RH MPS NOZ.                SECTION LIMITS      .000 /   1.000

                                               DCNMDX

 X/DE       GRADIENT  BETA        -6.0740    -3.0440      .0000     3.0490     6.0790

    .058     -.1257                -.0240      .3827      .0128     -.0388      .0448
    .232     -.0093                -.0337      .0283      .0334      .0404      .0969
    .406      .0172                -.0278     -.0523      .0075      .0086      .0440
    .580      .0023                -.0141     -.0069     -.0059      .0025      .0065
    .754      .0018                -.0083     -.0055     -.0018     -.0181     -.0096
    .928     -.0002                -.0012      .0007      .0039     -.0081     -.0026
```

```
                                          CAL T14-053 IA36 O2 + T1 + S1 LOWER RH MPS NOZ.          (AUFC08)    ( 17 NOV 73  )

                 REFERENCE DATA                                                                   PARAMETRIC DATA

SREF  =     49.4000 SQ.FT.   XMRP  =   158.0000 INCHES
                                                                               ALPHA   =     .000   POWER   =     1.000
LREF  =     90.7000 INCHES   YMRP  =      .0000 INCHES
                                                                               OPR     =   28.310   SRMPR   =     2.020
BREF  =     90.7000 INCHES   ZMRP  =      .0000 INCHES
                                                                               GP1     =   11.000   GY1     =    -9.000
SCALE =       .0190 SCALE
                                                                               GP2     =     .000   GY2     =    -9.000
                                                                               GP3     =     .000   GY3     =    -9.000
 MACH NO.      1.194
                          SECTION( 1)    LOWER RH MPS NOZ.                  SECTION LIMITS      .000 /    1.000

                                             DCY/DX

 X/DE        GRADIENT  BETA          -6.0740     -3.0440      .0000      3.0490     6.0790

   .058       .0762                  -.2253      -.2321      -.2439      -.3165     -.3194
   .232       .0843                  -.2378      -.2566      -.2852      -.3673     -.3796
   .406       .0500                  -.0950      -.1521      -.1089      -.2298     -.2403
   .580       .0101                  -.0391      -.0307      -.0108      -.0329     -.0446
   .754       .0060                  -.0212      -.0182      -.0051      -.0093     -.0082
   .928       .0006                  -.0058      -.0017       .0014      -.0048     -.0087
```

```
                          CAL T14-053 IA36 02 + T1 + S1 LOWER RH MPS NOZ.             (AUFC08)   ( 17 NOV 73  )

          REFERENCE DATA                                                                 PARAMETRIC DATA

SREF  =    49.4000 SQ.FT.   XMRP  =  158.0000 INCHES
LREF  =    90.7000 INCHES   YMRP  =      .0000 INCHES                 ALPHA  =      .000  POWER  =    1.000
BREF  =    90.7000 INCHES   ZMRP  =      .0000 INCHES                 OPR    =    28.310  SRMPR  =    2.020
SCALE =      .0190 SCALE                                              GP1    =    11.000  GY1    =   -9.000
                                                                      GP2    =      .000  GY2    =   -9.000
                                                                      GP3    =      .000  GY3    =   -9.000
 MACH NO.     1.194
                      SECTION( 1)   LOWER RH MPS NOZ.                SECTION LIMITS    .000 /   1.000

                                          DCYNDX

 X/DE      GRADIENT  BETA       -6.0740    -3.0440     .0000     3.0490     6.0790

   .058     -.1284                .3794      .3908     .4108      .5329      .5379
   .232     -.1273                .3591      .3874     .4306      .5547      .5732
   .406     -.0668                .1269      .2032     .1455      .3070      .3210
   .580     -.0117                .0454      .0357     .0126      .0382      .0518
   .754     -.0059                .0209      .0180     .0050      .0092      .0081
   .928     -.0005                .0047      .0014    -.0012      .0039      .0070
```

```
                            CAL T14-053 IA36 02 + T1 + S1 UPPER MPS NOZZLE                   (DUFA01)   ( 17 NOV 73  )

          REFERENCE DATA                                                                     PARAMETRIC DATA

SREF  =   49.4000 SQ.FT.   XMRP  =   158.0000 INCHES                          BETA   =     .000   POWER  =      .000
LREF  =   90.7000 INCHES   YMRP  =      .0000 INCHES                          GP1    =   11.000   GY1    =    -9.000
BREF  =   90.7000 INCHES   ZMRP  =      .0000 INCHES                          GP2    =     .000   GY2    =    -9.000
SCALE =     .0190 SCALE                                                       GP3    =     .000   GY3    =      .000

                       RUN NO.    0/ 0    RN/L =    .00    GRADIENT INTERVAL =  -5.00/ -5.00

          MACH      ALPHA       CN          CY          CFR      THETAF       CLM        CYN         CMR       THETAM
          .901     -8.088    -.15354     -.02364      .15534   188.75213     .22511     .03539      .22788    98.93430
          .900     -4.049    -.13762     -.02006      .13907   188.29230     .20332     .03005      .20552    98.40650
          .900       .013    -.11603     -.01749      .11734   188.57216     .17141     .02637      .17343    98.74702
          .899      4.005    -.11285     -.01297      .11359   186.55409     .16616     .01987      .16734    96.82069
          .699      6.006    -.10574     -.01706      .10710   189.16708     .15622     .02617      .15839    99.51042
                 GRADIENT     .03399      .00495     -.03435   -46.50341    -.05021    -.00742     -.05076   -24.30390

                            CAL T14-053 IA36 02 + T1 + S1 UPPER MPS NOZZLE                   (DUFA02)   ( 17 NOV 73  )

          REFERENCE DATA                                                                     PARAMETRIC DATA

SREF  =   49.4000 SQ.FT.   XMRP  =   158.0000 INCHES                          ALPHA  =     .000   POWER  =      .000
LREF  =   90.7000 INCHES   YMRP  =      .0000 INCHES                          GP1    =   11.000   GY1    =    -9.000
BREF  =   90.7000 INCHES   ZMRP  =      .0000 INCHES                          GP2    =     .000   GY2    =    -9.000
SCALE =     .0190 SCALE                                                       GP3    =     .000   GY3    =      .000

                       RUN NO.    0/ 0    RN/L =    .00    GRADIENT INTERVAL =  -5.00/ -5.00

          MACH       BETA       CN          CY          CFR      THETAF       CLM        CYN         CMR       THETAM
          .901     -6.079    -.04754      .01015      .04861   167.94971     .07178    -.01293      .07293    79.79216
          .900     -3.049    -.08476     -.00501      .08490   183.38101     .12540     .00937      .12575    94.27174
          .901       .000    -.11976     -.01442      .12062   186.86483     .17644     .02190      .17779    97.07540
          .900      3.051    -.13070     -.03925      .13647   196.71492     .19131     .05816      .19996   106.90925
          .901      6.089    -.17340     -.09084      .19575   207.64986     .25190     .13610      .28632   118.38191
                 GRADIENT     .02780      .00164     -.02785   -60.14464    -.04113    -.00307     -.04124   -30.91891
```

```
                                   CAL T14-053 IA36 O2 + T1 + S1 UPPER MPS NOZZLE                    (DUFA03)   ( 17 NOV 73  )

           REFERENCE DATA                                                                                  PARAMETRIC DATA

SREF  =    49.4000 SQ.FT.   XMRP  =   158.0000 INCHES                                    BETA    =      .000  POWER  =     1.000
LREF  =    90.7000 INCHES   YMRP  =      .0000 INCHES                                    OPR     =    36.200  SRMPR  =     2.330
BREF  =    90.7000 INCHES   ZMRP  =      .0000 INCHES                                    GP1     =    11.000  GY1    =    -9.000
SCALE =      .0190 SCALE                                                                 GP2     =      .000  GY2    =    -9.000
                                                                                         GP3     =      .000  GY3    =    -9.000

                     RUN NO.    0/ 0    RN/L =    .00    GRADIENT INTERVAL =  -5.00/ -5.00

          MACH       ALPHA       CN          CY          CFR       THETAF       CLM         CYN         CMR       THETAM
          .897      -8.088     -.19062     -.03532     .19386   190.49685     .27198      .05392      .27727   101.21394
          .899      -4.038     -.14575     -.04371     .15216   196.69330     .20839      .06755      .21906   107.95951
          .901        .001     -.12501     -.02854     .12825   192.90312     .17774      .04521      .18340   104.27091
          .902       4.026     -.13904     -.01954     .14040   187.99886     .16646      .03253      .16961   101.05589
          .898       6.021     -.11605     -.01319     .11679   186.48328     .16584      .02257      .16737    97.74886
                  GRADIENT      .03609      .01082    -.03768   -48.71058    -.05161     -.01673     -.05425   -26.73589

                                   CAL T14-053 IA36 O2 + T1 + S1 UPPER MPS NOZZLE                    (DUFA04)   ( 17 NOV 73  )

           REFERENCE DATA                                                                                  PARAMETRIC DATA

SREF  =    49.4000 SQ.FT.   XMRP  =   158.0000 INCHES                                    ALPHA   =      .000  POWER  =     1.000
LREF  =    90.7000 INCHES   YMRP  =      .0000 INCHES                                    OPR     =    36.200  SRMPR  =     2.330
BREF  =    90.7000 INCHES   ZMRP  =      .0000 INCHES                                    GP1     =    11.000  GY1    =    -9.000
SCALE =      .0190 SCALE                                                                 GP2     =      .000  GY2    =    -9.000
                                                                                         GP3     =      .000  GY3    =    -9.000

                     RUN NO.    0/ 0    RN/L =    .00    GRADIENT INTERVAL =  -5.00/ -5.00

          MACH       BETA        CN          CY          CFR       THETAF       CLM         CYN         CMR       THETAM
          .899      -6.078     -.05950      .01184     .06066   168.74682     .08733     -.01381      .08842    81.01188
          .900      -3.049     -.09316      .00026     .09316   179.83702     .13296      .00332      .13300    91.43170
          .899        .000     -.12056     -.02006     .12221   189.44547     .17249      .03322      .17566   100.90291
          .898       3.051     -.12390     -.06487     .13986   207.63612     .20656      .10033      .22964   115.90780
          .899       6.088     -.17271     -.11316     .20648   213.23317     .27822      .17293      .32759   121.86323
                  GRADIENT      .03055     -.00009    -.03055   -58.98230    -.04361     -.00109     -.04362   -29.98744
```

```
                              CAL T14-053 IA36 O2 + T1 + S1 UPPER MPS NOZZLE                 (DUFA05)   ( 17 NOV 73  )

             REFERENCE DATA                                                                    PARAMETRIC DATA

SREF  =    49.4000 SQ.FT.    XMRP  =   158.0000 INCHES                           BETA    =      .000   POWER   =      .000
LREF  =    90.7000 INCHES    YMRP  =      .0000 INCHES                           GP1     =    11.000   GY1     =    -9.000
BREF  =    90.7000 INCHES    ZMRP  =      .0000 INCHES                           GP2     =      .000   GY2     =    -9.000
SCALE =      .0190 SCALE                                                         GP3     =      .000   GY3     =      .000

                        RUN NO.    0/ 0    RN/L =     .00    GRADIENT INTERVAL =  -5.00/ -5.00

           MACH      ALPHA       CN          CY          CFR       THETAF       CLM         CYN         CMR       THETAM
          1.203     -8.101    -.31607     -.07478      .32480   193.31051     .45098      .10511      .46307   103.11948
          1.202     -4.038    -.26949     -.06138      .27639   192.83118     .38497      .08215      .39364   102.04629
          1.203      -.011    -.23211     -.04584      .23659   191.17179     .33124      .05870      .33640   100.05004
          1.203      4.003    -.20349     -.05091      .20976   194.04541     .29154      .07602      .30129   104.61534
          1.202      6.018    -.19931     -.04851      .20512   193.68046     .28723      .07259      .29626   104.18231
                  GRADIENT     .06674      .01520     -.06845   -47.75413    -.09534     -.02034     -.09748   -25.27149

                              CAL T14-053 IA36 O2 + T1 + S1 UPPER MPS NOZZLE                 (DUFA06)   ( 17 NOV 73  )

             REFERENCE DATA                                                                    PARAMETRIC DATA

SREF  =    49.4000 SQ.FT.    XMRP  =   158.0000 INCHES                           ALPHA   =      .000   POWER   =      .000
LREF  =    90.7000 INCHES    YMRP  =      .0000 INCHES                           GP1     =    11.000   GY1     =    -9.000
BREF  =    90.7000 INCHES    ZMRP  =      .0000 INCHES                           GP2     =      .000   GY2     =    -9.000
SCALE =      .0190 SCALE                                                         GP3     =      .000   GY3     =      .000

                        RUN NO.    0/ 0    RN/L =     .00    GRADIENT INTERVAL =  -5.00/ -5.00

           MACH       BETA       CN          CY          CFR       THETAF       CLM         CYN         CMR       THETAM
          1.202     -6.079    -.21081      .01893      .21166   174.86857     .25240     -.00378      .25243    89.14280
          1.202     -3.051    -.23269      .01446      .23314   176.44349     .27682      .00294      .27684    90.60765
          1.202       .000    -.21646      .01308      .21686   176.54125     .24946      .02625      .25094    96.00744
          1.203      3.051    -.25029     -.06189      .25783   193.89020     .32590      .12309      .34837   110.69040
          1.203      6.079    -.30226     -.09969      .31827   198.25355     .39264      .18127      .43246   114.78212
                  GRADIENT     .07627     -.00474     -.07641   -57.83136    -.09073     -.00096     -.09074   -29.69769
```

```
                              CAL T14-053 IA36 O2 + T1 + S1 UPPER MPS NOZZLE              (DUFA07)   ( 17 NOV 73  )

         REFERENCE DATA                                                                        PARAMETRIC DATA

SREF  =    49.4000 SQ.FT.   XMRP  =   158.0000 INCHES                               BETA   =     .000   POWER  =     1.000
LREF  =    90.7000 INCHES   YMRP  =      .0000 INCHES                               OPR    =   28.310   SRMPR  =     2.020
BREF  =    90.7000 INCHES   ZMRP  =      .0000 INCHES                               GP1    =   11.000   GY1    =    -9.000
SCALE =      .0190 SCALE                                                            GP2    =     .000   GY2    =    -9.000
                                                                                    GP3    =     .000   GY3    =    -9.000

                      RUN NO.    0/ 0    RN/L =     .00    GRADIENT INTERVAL =  -5.00/ -5.00

          MACH      ALPHA       CN         CY         CFR       THETAF      CLM        CYN        CMR       THETAM
          1.199     -6.108    -.32801    -.04231     .33073  187.35004    .41650     .07012     .42236   99.55713
          1.198     -4.075    -.28389    -.03145     .28563  186.32141    .35165     .05086     .35531   98.22937
          1.197      -.023    -.24484    -.01287     .24518  183.00884    .29213     .02185     .29294   94.27831
          1.196      4.017    -.20046    -.00797     .20061  182.27676    .23311     .01405     .23353   93.45037
          1.200      6.028    -.18600    -.00487     .18607  191.49869    .21318     .01059     .21344   92.84479
                  GRADIENT     .06967     .00772    -.07009  -45.72304   -.08629    -.01248    -.08719  -24.10537

                              CAL T14-053 IA36 O2 + T1 + S1 UPPER MPS NOZZLE              (DUFA08)   ( 17 NOV 73  )

         REFERENCE DATA                                                                        PARAMETRIC DATA

SREF  =    49.4000 SQ.FT.   XMRP  =   158.0000 INCHES                               ALPHA  =     .000   POWER  =     1.000
LREF  =    90.7000 INCHES   YMRP  =      .0000 INCHES                               OPR    =   28.310   SRMPR  =     2.020
BREF  =    90.7000 INCHES   ZMRP  =      .0000 INCHES                               GP1    =   11.000   GY1    =    -9.000
SCALE =      .0190 SCALE                                                            GP2    =     .000   GY2    =    -9.000
                                                                                    GP3    =     .000   GY3    =    -9.000

                      RUN NO.    0/ 0    RN/L =     .03    GRADIENT INTERVAL =  -5.00/ -5.00

          MACH      BETA        CN         CY         CFR       THETAF      CLM        CYN        CMR       THETAM
          1.194     -6.074    -.10456    -.02731     .10806  194.63702    .27087    -.04981     .27542   79.57975
          1.194     -3.044    -.15119    -.03032     .15420  191.34092    .32973    -.03235     .33131   84.39626
          1.199       .000    -.15232    -.07480     .16970  206.15525    .35630     .01723     .35672   92.76863
          1.195      3.049    -.15781    -.11228     .19368  215.43158    .36736     .08658     .37743  103.26211
          1.197      6.079    -.20810    -.13094     .24586  212.17830    .42856     .12036     .44514  105.68670
                  GRADIENT     .04967     .00996    -.05066  -62.65838   -.10832     .01033    -.10884  -27.72545
```

```
                               CAL T14-053 IA36 O2 + T1 + S1 LOWER LH MPS NOZ.          (DUFB01)   ( 17 NOV 73  )

              REFERENCE DATA                                                            PARAMETRIC DATA

SREF  =    49.4000 SQ.FT.   XMRP  =   158.0000 INCHES                       BETA   =      .000  POWER  =      .000
LREF  =    90.7000 INCHES   YMRP  =      .0000 INCHES                       GP1    =    11.000  GY1    =    -9.000
BREF  =    90.7000 INCHES   ZMRP  =      .0000 INCHES                       GP2    =      .000  GY2    =    -9.000
SCALE =      .0190 SCALE                                                    GP3    =      .000  GY3    =      .000

                        RUN NO.    0/ 0    RN/L =    .00    GRADIENT INTERVAL =  -5.00/ -5.00

           MACH      ALPHA       CN         CY        CFR       THETAF       CLM        CYN        CMR       THETAM
           .901     -8.068     .00086    -.00107     .00138  308.81519   -.00141     .00180     .00229  218.14247
           .900     -4.049     .00052     .00049     .00071   43.46674   -.00079     .00012     .00080  261.42846
           .900       .013    -.00040    -.00388     .00390  264.16819    .00053     .00554     .00557  174.49906
           .899      4.005     .00106    -.00365     .00381  286.22511   -.00183     .00509     .00541  199.71998
           .899      6.006    -.00066    -.00629     .00632  263.98892    .00067     .00838     .00841  175.40849
                  GRADIENT    -.00013    -.00012    -.00018  -10.73518    .00020    -.00003    -.00020  -64.56618

                               CAL T14-053 IA36 O2 + T1 + S1 LOWER LH MPS NOZ.          (DUFB02)   ( 17 NOV 73  )

              REFERENCE DATA                                                            PARAMETRIC DATA

SREF  =    49.4000 SQ.FT.   XMRP  =   158.0000 INCHES                       ALPHA  =      .000  POWER  =      .000
LREF  =    90.7000 INCHES   YMRP  =      .0000 INCHES                       GP1    =    11.000  GY1    =    -9.000
BREF  =    90.7000 INCHES   ZMRP  =      .0000 INCHES                       GP2    =      .000  GY2    =    -9.000
SCALE =      .0190 SCALE                                                    GP3    =      .000  GY3    =      .000

                        RUN NO.    0/ 0    RN/L =    .30    GRADIENT INTERVAL =  -5.00/ -5.00

           MACH      BETA        CN         CY        CFR       THETAF       CLM        CYN        CMR       THETAM
           .901     -6.079    -.00100     .00057     .00115  150.51607    .00122    -.00126     .00175   44.02800
           .900     -3.049    -.00481    -.00170     .00510  199.42819    .00672     .00188     .00698  105.67396
           .901       .000    -.00156    -.00322     .00357  244.11031    .00229     .00480     .00532  154.51175
           .900      3.051     .00272    -.00319     .00419  310.51687   -.00369     .00459     .00589  218.74892
           .901      6.089     .00602    -.00441     .00746  323.78248   -.00775     .00668     .01023  229.26558
                  GRADIENT     .00158     .00056    -.00167  -65.40774   -.00220    -.00062    -.00229  -34.65856
```

```
                                CAL T14-053 IA36 02 + T1 + S1 LOWER LH MPS NOZ.              (DUFB03)   ( 17 NOV 73  )

             REFERENCE DATA                                                                   PARAMETRIC DATA

SREF  =    49.4000 SQ.FT.   XMRP  =   158.0000 INCHES                           BETA   =      .000  POWER  =     1.000
LREF  =    90.7000 INCHES   YMRP  =      .0000 INCHES                           OPR    =    36.200  SRMPR  =     2.330
BREF  =    90.7000 INCHES   ZMRP  =      .0000 INCHES                           GP1    =    11.000  GY1    =    -9.000
SCALE =      .0190 SCALE                                                        GP2    =      .000  GY2    =    -9.000
                                                                                GP3    =      .000  GY3    =    -9.000

                     RUN NO.    0/ 0    RN/L =     .00    GRADIENT INTERVAL =  -5.00/ -5.00

           MACH      ALPHA       CN         CY         CFR      THETAF      CLM        CYN        CMR       THETAM
            .897     -8.088    -.00062    -.00208     .00217  253.47927    .00092     .00309     .00322  163.32370
            .899     -4.038    -.00233    -.00392     .00456  239.22865    .00303     .00515     .00597  149.54222
            .901       .001     .00187    -.00324     .00374  299.95061   -.00270     .00456     .00530  210.60602
            .902      4.026     .00335    -.00229     .00406  325.61424   -.00434     .00306     .00531  234.78455
            .898      6.021     .00370    -.00058     .00375  351.08860   -.00442     .00096     .00452  257.79317
                   GRADIENT     .00058     .00097    -.00113  -59.24434   -.00075    -.00128    -.00148  -37.03374

                                CAL T14-053 IA36 02 + T1 + S1 LOWER LH MPS NOZ.              (DUFB04)   ( 17 NOV 73  )

             REFERENCE DATA                                                                   PARAMETRIC DATA

SREF  =    49.4000 SQ.FT.   XMRP  =   158.0000 INCHES                           ALPHA  =      .000  POWER  =     1.000
LREF  =    90.7000 INCHES   YMRP  =      .0000 INCHES                           OPR    =    36.200  SRMPR  =     2.330
BREF  =    90.7000 INCHES   ZMRP  =      .0000 INCHES                           GP1    =    11.000  GY1    =    -9.000
SCALE =      .0190 SCALE                                                        GP2    =      .000  GY2    =    -9.000
                                                                                GP3    =      .000  GY3    =    -9.000

                     RUN NO.    0/ 0    RN/L =     .00    GRADIENT INTERVAL =  -5.00/ -5.00

           MACH      BETA        CN         CY         CFR      THETAF      CLM        CYN        CMR       THETAM
            .899     -6.078     .00618    -.00183     .00644  343.52958   -.01222     .00338     .01268  254.54295
            .900     -3.049     .00205     .00096     .00227   25.15088   -.00454    -.00066     .00459  278.32976
            .899       .000     .00227     .00078     .00240   19.00362   -.00296    -.00116     .00318  291.43341
            .898      3.051     .00122     .00376     .00395   72.07551   -.00152    -.00602     .00621  345.82085
            .899      6.088     .00279     .00807     .00854   70.89951   -.00384    -.01130     .01193  341.24148
                   GRADIENT    -.00067    -.00032    -.00074   -8.24889    .00149     .00022    -.00150  -91.28559
```

```
                                 CAL T14-053 IA36 O2 + T1 + S1 LOWER LH MPS NOZ.           (DUFB05)   ( 17 NOV 73  )

           REFERENCE DATA                                                                        PARAMETRIC DATA

SREF  =     49.4000 SQ.FT.   XMRP  =   158.0000 INCHES                             BETA   =      .000   POWER  =      .000
LREF  =     90.7000 INCHES   YMRP  =      .0000 INCHES                             GP1    =    11.000   GY1    =    -9.000
BREF  =     90.7000 INCHES   ZMRP  =      .0000 INCHES                             GP2    =      .000   GY2    =    -9.000
SCALE =       .0190 SCALE                                                          GP3    =      .000   GY3    =      .000

                    RUN NO.    0/ 0    RN/L =     .00    GRADIENT INTERVAL =  -5.00/ -5.00

         MACH      ALPHA       CN          CY          CFR       THETAF       CLM         CYN          CMR       THETAM
         1.203     -8.101     .00430     -.00045     .00433   354.05526    -.00562     -.00041      .00564   274.14908
         1.202     -4.038     .00582     -.00326     .00667   330.75423    -.00691      .00330      .00766   244.47244
         1.203      -.011     .00674     -.00295     .00736   336.34170    -.00793      .00338      .00862   246.91246
         1.203      4.003     .00907     -.00610     .01093   326.09036    -.01141      .00746      .01363   236.82576
         1.202      6.018     .01044     -.00599     .01204   330.14910    -.01299      .00760      .01505   239.65099
                 GRADIENT    -.00144      .00081    -.00165   -81.91041     .00171     -.00082     -.00190   -60.54295

                                 CAL T14-053 IA36 O2 + T1 + S1 LOWER LH MPS NOZ.           (DUFB06)   ( 17 NOV 73  )

           REFERENCE DATA                                                                        PARAMETRIC DATA

SREF  =     49.4000 SQ.FT.   XMRP  =   158.0000 INCHES                             ALPHA  =      .000   POWER  =      .000
LREF  =     90.7000 INCHES   YMRP  =      .0000 INCHES                             GP1    =    11.000   GY1    =    -9.000
BREF  =     90.7000 INCHES   ZMRP  =      .0000 INCHES                             GP2    =      .000   GY2    =    -9.000
SCALE =       .0190 SCALE                                                          GP3    =      .000   GY3    =      .000

                    RUN NO.    0/ 0    RN/L =     .00    GRADIENT INTERVAL =  -5.00/ -5.00

         MACH      BETA        CN          CY          CFR       THETAF       CLM         CYN          CMR       THETAM
         1.202     -6.079     .00429     -.00378     .00572   318.64439    -.00522      .00413      .00666   231.62790
         1.202     -3.051     .00572     -.00157     .00593   344.68225    -.00683      .00120      .00693   260.04947
         1.202       .000    -.01924     -.00296     .01947   188.74916     .02680      .00308      .02698    96.55184
         1.203      3.051     .00667     -.00630     .00917   316.62116    -.00789      .00856      .01164   222.68380
         1.203      6.079     .00777     -.00341     .00849   336.29720    -.00960      .00425      .01050   246.12057
                 GRADIENT    -.00127      .00051    -.00194  -112.97353     .00224     -.00039     -.00227   -85.23417
```

```
                               CAL T14-053 IA36 O2 + T1 + S1 LOWER LH MPS NOZ.                    (DUFB07)    ( 17 NOV 73  )

            REFERENCE DATA                                                                       PARAMETRIC DATA

SREF  =    49.4000 SQ.FT.   XMRP  =   158.0000 INCHES                              BETA   =      .000   POWER  =     1.000
LREF  =    90.7000 INCHES   YMRP  =      .0000 INCHES                              OPR    =    28.310   SRMPR  =     2.020
BREF  =    90.7000 INCHES   ZMRP  =      .0000 INCHES                              GP1    =    11.000   GY1    =    -9.000
SCALE =      .0190 SCALE                                                           GP2    =      .000   GY2    =    -9.000
                                                                                   GP3    =      .000   GY3    =    -9.000

                     RUN NO.    0/ 0    RN/L =     .00    GRADIENT INTERVAL =  -5.00/ -5.00

          MACH       ALPHA       CN          CY          CFR        THETAF        CLM          CYN          CMR      THETAM
          1.199     -8.108      .01718      .00763      .01880    23.95417     -.02525      -.01386      .02881  298.75103
          1.198     -4.075      .01372      .00694      .01537    26.83458     -.02074      -.01299      .02447  302.06734
          1.197      -.023      .01101      .00584      .01246    27.96313     -.01756      -.01063      .02052  301.18990
          1.196      4.017     -.01613      .00889      .01842   151.12893      .02959      -.01533      .03333   62.60772
          1.200      6.028     -.01344      .00701      .01516   152.46857      .02533      -.01263      .02830   63.49016
                  GRADIENT     -.00337     -.00170     -.00377    -6.58517      .00509       .00319     -.00601  -74.12695

                               CAL T14-053 IA36 O2 + T1 + S1 LOWER LH MPS NOZ.                    (DUFB08)    ( 17 NOV 73  )

            REFERENCE DATA                                                                       PARAMETRIC DATA

SREF  =    49.4000 SQ.FT.   XMRP  =   158.0000 INCHES                              ALPHA  =      .000   POWER  =     1.000
LREF  =    90.7000 INCHES   YMRP  =      .0000 INCHES                              OPR    =    28.310   SRMPR  =     2.020
BREF  =    90.7000 INCHES   ZMRP  =      .0000 INCHES                              GP1    =    11.000   GY1    =    -9.000
SCALE =      .0190 SCALE                                                           GP2    =      .000   GY2    =    -9.000
                                                                                   GP3    =      .000   GY3    =    -9.000

                     RUN NO.    0/ 0    RN/L =     .00    GRADIENT INTERVAL =  -5.00/ -5.00

          MACH       BETA        CN          CY          CFR        THETAF        CLM          CYN          CMR      THETAM
          1.194     -6.074      .02394      .00251      .02407     5.97779     -.03927      -.00849      .04017  282.19717
          1.194     -3.044     -.00919      .00647      .01124   144.83767      .01655      -.01165      .02024   54.87418
          1.199       .000      .00860      .00431      .00962    26.63188     -.01424      -.00845      .01656  300.66856
          1.195      3.049     -.00041      .01743      .01743    91.35155     -.00003      -.02717      .02717  359.93874
          1.197      6.079      .00555      .01427      .01531    68.73465     -.00836      -.02098      .02258  338.28105
                  GRADIENT      .00302     -.00213     -.00369   -47.58136     -.00544       .00383     -.00665  -18.02700
```

```
                               CAL T14-053 IA36 O2 + T1 + S1 LOWER RH MPS NOZ.              (DUFC01)   ( 17 NOV 73  )

         REFERENCE DATA                                                                          PARAMETRIC DATA

SREF  =    49.4000 SQ.FT.   XMRP  =   158.0000 INCHES                             BETA    =      .000   POWER  =      .000
LREF  =    90.7000 INCHES   YMRP  =      .0000 INCHES                             GP1     =    11.000   GY1    =    -9.000
BREF  =    90.7000 INCHES   ZMRP  =      .0000 INCHES                             GP2     =      .000   GY2    =    -9.000
SCALE =      .0190 SCALE                                                          GP3     =      .000   GY3    =      .000

                   RUN NO.    0/ 0    RN/L =     .00    GRADIENT INTERVAL =  -5.00/ -5.00

          MACH      ALPHA       CN          CY          CFR       THETAF       CLM         CYN          CMR      THETAM
          .901     -8.088    -.03436     -.07998      .08705  246.75172     .05399      .12284      .13418  156.27119
          .900     -4.049    -.03244     -.08341      .08950  248.75037     .05030      .12798      .13751  158.54217
          .900       .013    -.03019     -.07585      .08163  248.29866     .04646      .11713      .12600  158.36484
          .899      4.005    -.03049     -.08379      .08917  250.00687     .04666      .12852      .13673  160.04684
          .899      6.006    -.03277     -.08031      .08674  247.80428     .04926      .12421      .13362  158.36573
                 GRADIENT     .00801      .02060     -.02210  -61.43501    -.01242     -.03161     -.03396  -39.15588

                               CAL T14-053 IA36 O2 + T1 + S1 LOWER RH MPS NOZ.              (DUFC02)   ( 17 NOV 73  )

         REFERENCE DATA                                                                          PARAMETRIC DATA

SREF  =    49.4000 SQ.FT.   XMRP  =   158.0000 INCHES                             ALPHA   =      .000   POWER  =      .000
LREF  =    90.7000 INCHES   YMRP  =      .0000 INCHES                             GP1     =    11.000   GY1    =    -9.000
BREF  =    90.7000 INCHES   ZMRP  =      .0000 INCHES                             GP2     =      .000   GY2    =    -9.000
SCALE =      .0190 SCALE                                                          GP3     =      .000   GY3    =      .000

                   RUN NO.    0/ 0    RN/L =     .00    GRADIENT INTERVAL =  -5.00/ -5.00

          MACH      BETA        CN          CY          CFR       THETAF       CLM         CYN          CMR      THETAM
          .901     -6.079    -.02407     -.05468      .05974  246.24414     .03649      .08569      .09313  156.93034
          .900     -3.049    -.02715     -.06591      .07128  247.61135     .04169      .10073      .10901  157.51501
          .901       .000    -.02961     -.07616      .08171  248.75410     .04587      .11735      .12600  158.65046
          .900      3.051    -.03047     -.09747      .10212  252.64011     .04744      .14904      .15641  162.34180
          .901      6.089    -.03915     -.12427      .13029  252.51457     .06005      .16738      .19677  162.22968
                 GRADIENT     .00893      .02162     -.02338  -81.21068    -.01367     -.03304     -.03575  -51.66120
```

```
                                    CAL T14-053 IA36 O2 + T1 + S1 LOWER RH MPS NOZ.               (DUFC03)   ( 17 NOV 73  )

              REFERENCE DATA                                                                              PARAMETRIC DATA

SREF  =    49.4000 SQ.FT.   XMRP  =   158.0000 INCHES                                       BETA   =      .000  POWER  =     1.000
LREF  =    90.7000 INCHES   YMRP  =      .0000 INCHES                                       OPR    =    36.200  SRMPR  =     2.330
BREF  =    90.7000 INCHES   ZMRP  =      .0000 INCHES                                       GP1    =    11.000  GY1    =    -9.000
SCALE =      .0190 SCALE                                                                    GP2    =      .000  GY2    =    -9.000
                                                                                            GP3    =      .000  GY3    =    -9.000

                          RUN NO.    0/ 0    RN/L =     .00    GRADIENT INTERVAL =  -5.00/ -5.00

            MACH       ALPHA        CN          CY          CFR        THETAF        CLM         CYN         CMR       THETAM
            .897      -8.088     -.03467     -.09659      .10263  250.25618      .05388      .14641      .15601  159.79564
            .899      -4.038     -.03121     -.09622      .10116  252.03088      .04983      .14503      .15335  161.03676
            .901        .001     -.03413     -.09452      .10049  250.14583      .05236      .14164      .15101  159.71244
            .902       4.026     -.03385     -.10148      .10698  251.55200      .05276      .15293      .16177  160.96685
            .898       6.021     -.03461     -.10001      .10583  250.91115      .05291      .15132      .16030  160.72832
                    GRADIENT      .00773      .02383     -.02505  -62.41478     -.01234     -.03592     -.03798  -39.88033

                                    CAL T14-053 IA36 O2 + T1 + S1 LOWER RH MPS NOZ.               (DUFC04)   ( 17 NOV 73  )

              REFERENCE DATA                                                                              PARAMETRIC DATA

SREF  =    49.4000 SQ.FT.   XMRP  =   158.0000 INCHES                                       ALPHA  =      .000  POWER  =     1.000
LREF  =    90.7000 INCHES   YMRP  =      .0000 INCHES                                       OPR    =    36.200  SRMPR  =     2.330
BREF  =    90.7000 INCHES   ZMRP  =      .0000 INCHES                                       GP1    =    11.000  GY1    =    -9.000
SCALE =      .0190 SCALE                                                                    GP2    =      .000  GY2    =    -9.000
                                                                                            GP3    =      .000  GY3    =    -9.000

                          RUN NO.    0/ 0    RN/L =     .00    GRADIENT INTERVAL =  -5.00/ -5.00

            MACH        BETA        CN          CY          CFR        THETAF        CLM         CYN         CMR       THETAM
            .899      -6.078     -.04687     -.07978      .09253  239.56718      .07040      .11993      .13907  149.58906
            .900      -3.049     -.04005     -.07666      .08649  242.41480      .06101      .11493      .13012  152.03858
            .899        .000     -.03221     -.09332      .09873  250.96083      .04989      .14004      .14867  160.39008
            .898       3.051     -.02802     -.12552      .12861  257.41491      .04230      .18730      .19201  167.27345
            .899       6.088     -.02841     -.15263      .15525  259.45630      .04130      .22612      .22986  159.64854
                    GRADIENT      .01314      .02514     -.02837  -79.50633     -.02001     -.03769     -.04267  -49.86506
```

```
                               CAL T14-053 IA36 O2 + T1 + S1 LOWER RH MPS NOZ.                 (DUFC05)   ( 17 NOV 73  )

           REFERENCE DATA                                                                             PARAMETRIC DATA

SREF  =    49.4000 SQ.FT.   XMRP  =   158.0000 INCHES                          BETA   =       .000  POWER   =       .000
LREF  =    90.7000 INCHES   YMRP  =      .0000 INCHES                          GP1    =     11.000  GY1     =     -9.000
BREF  =    90.7000 INCHES   ZMRP  =      .0000 INCHES                          GP2    =       .000  GY2     =     -9.000
SCALE =      .0190 SCALE                                                       GP3    =       .000  GY3     =       .000

                      RUN NO.     0/ 0     RN/L =      .00    GRADIENT INTERVAL =  -5.00/ -5.00

          MACH       ALPHA         CN          CY          CFR       THETAF        CLM         CYN          CMR       THETAM
          1.203      -8.101     -.07993     -.13790      .15939  239.90167      .12103      .21200       .24412  150.27728
          1.202      -4.038     -.05662     -.11203      .12553  243.18931      .08577      .17378       .19379  153.73170
          1.203       -.011     -.03941     -.09044      .09866  246.45766      .05989      .14059       .[illegible]81  156.92782
          1.203       4.003     -.02858     -.07624      .08142  249.45405      .04349      .11983       .12748  160.05162
          1.202       6.018     -.02186     -.06727      .07073  251.99963      .03298      .10648       .11147  162.79220
                   GRADIENT      .01402      .02775     -.03109  -60.22519     -.02124     -.04304      -.04799  -38.07125

                               CAL T14-053 IA36 O2 + T1 + S1 LOWER RH MPS NOZ.                 (DUFC06)   ( 17 NOV 73  )

           REFERENCE DATA                                                                             PARAMETRIC DATA

SREF  =    49.4000 SQ.FT.   XMRP  =   158.0000 INCHES                          ALPHA  =       .000  POWER   =       .000
LREF  =    90.7000 INCHES   YMRP  =      .0000 INCHES                          GP1    =     11.000  GY1     =     -9.000
BREF  =    90.7000 INCHES   ZMRP  =      .0000 INCHES                          GP2    =       .000  GY2     =     -9.000
SCALE =      .0190 SCALE                                                       GP3    =       .000  GY3     =       .000

                      RUN NO.     0/ 0     RN/L =      .00    GRADIENT INTERVAL =  -5.00/ -5.00

          MACH        BETA         CN          CY          CFR       THETAF        CLM         CYN          CMR       THETAM
          1.202      -6.079     -.02179     -.05331      .05759  247.76592      .03283      .08433       .09049  158.72642
          1.202      -3.051     -.02322     -.06378      .06787  249.99271      .03628      .10021       .10638  160.09760
          1.202        .000     -.06680     -.08084      .10487  230.43045      .09664      .12406       .15726  142.08277
          1.203       3.051     -.04470     -.12271      .13060  249.38595      .06826      .18816       .20016  160.06189
          1.203       6.079     -.05804     -.14895      .15985  248.71135      .08512      .22707       .24250  159.44951
                   GRADIENT      .00761      .02090     -.02225  -81.93795     -.01189     -.03285      -.03493  -52.47381
```

```
                       CAL T14-053 IA36 O2 + T1 + S1 LOWER RH MPS NOZ.            (DUFC07)   ( 17 NOV 73  )

       REFERENCE DATA                                                                PARAMETRIC DATA

SREF  =    49.4000 SQ.FT.   XMRP  =   158.0000 INCHES                 BETA   =     .000  POWER  =    1.000
LREF  =    90.7000 INCHES   YMRP  =      .0000 INCHES                 OPR    =   28.310  SRMPR  =    2.020
BREF  =    90.7000 INCHES   ZMRP  =      .0000 INCHES                 GP1    =   11.000  GY1    =   -9.000
SCALE =      .0190 SCALE                                              GP2    =     .000  GY2    =   -9.000
                                                                      GP3    =     .000  GY3    =   -9.000

               RUN NO.    0/ 0    RN/L =     .00    GRADIENT INTERVAL =  -5.00/ -5.00

        MACH      ALPHA      CN         CY         CFR       THETAF      CLM        CYN        CMR      THETAM
        1.199    -8.108   -.02642    -.17220     .17421  261.27869    .04009     .25866     .26175  171.18954
        1.198    -4.075   -.01444    -.13724     .13800  263.99317    .02139     .20774     .20884  174.12177
        1.197     -.023   -.00636    -.11720     .11737  266.89286    .00920     .17825     .17849  177.04459
        1.196     4.017   -.02175    -.10742     .10960  258.55203    .03650     .16133     .16541  167.25200
        1.200     6.028   -.01894    -.09803     .09985  259.06512    .03157     .14714     .15049  167.89176
               GRADIENT    .00354     .03368    -.03387  -64.78360   -.00525    -.05098    -.05125  -42.72927

                       CAL T14-053 IA36 O2 + T1 + S1 LOWER RH MPS NOZ.            (DUFC08)   ( 17 NOV 73  )

       REFERENCE DATA                                                                PARAMETRIC DATA

SREF  =    49.4000 SQ.FT.   XMRP  =   158.0000 INCHES                 ALPHA  =     .000  POWER  =    1.000
LREF  =    90.7000 INCHES   YMRP  =      .0000 INCHES                 OPR    =   28.310  SRMPR  =    2.020
BREF  =    90.7000 INCHES   ZMRP  =      .0000 INCHES                 GP1    =   11.000  GY1    =   -9.000
SCALE =      .0190 SCALE                                              GP2    =     .000  GY2    =   -9.000
                                                                      GP3    =     .000  GY3    =   -9.000

               RUN NO.    0/ 0    RN/L =     .00    GRADIENT INTERVAL =  -5.00/ -5.00

        MACH      BETA       CN         CY         CFR       THETAF      CLM        CYN        CMR      THETAM
        1.194    -6.074    .01350    -.10318     .10405  277.45321   -.01844     .15371     .15482  186.84220
        1.194    -3.044   -.02763    -.11485     .11813  256.47191    .04943     .17093     .17793  163.87127
        1.199      .000   -.00554    -.10797     .10811  267.06041    .00838     .16488     .16509  177.09152
        1.195     3.049    .00179    -.15959     .15960  270.64177   -.00089     .23870     .23870  180.21306
        1.197     6.079   -.01980    -.16644     .16761  263.21570    .03048     .24778     .24965  172.98735
               GRADIENT    .00908     .03773    -.03881  -84.25490   -.01624    -.05615    -.05845  -53.83419
```

```
DATE 05 NOV 75
                              TABULATED DATA FOR CAL T14-053 (IA36)
                                    CAL T14-053 IA36 02 T1 S1  LOWER WING  POWER OFF                                  PAGE  538
                  REFERENCE DATA                                                                          (LUF015)   ( 09 OCT 73  )
 SREF  =  2690.0000 SQ.FT.                                                                               PARAMETRIC DATA
 LREF  =  1328.0000 IN.      XMRP  =   953.0000 IN.
 BREF  =  1328.0000 IN.      YMRP  =     .0000 IN.                                   BETA   =      .000
 SCALE =      .0190 SCALE    ZMRP  =   400.0000 IN.                                   GY1    =    -9.000   GP1    =    11.000
                                                                                      GY3    =    -9.000   GY2    =    -9.000
 MACH  ( 1) =      .903    ALPHA ( 1) =    -7.760
  SECTION ( 1)ORBITER WING
 ETA                                           DEPENDENT VARIABLE CP
            .2990    .4270    .5340    .6730    .7800    .8870
  X/C
   .050
   .400
   .550                                   .0000
           .0000    .0000                 .0000             .0000
   .600                      .0000
   .700
   .750    .0000                          .0000             .0000
   .800                      .0000
   .850             .0000                          .0000
   .900
   .950    .0000            -.2660        .0000
                                          .0000             .0000
 MACH  ( 1) =      .901    ALPHA ( 2) =    -3.820
  SECTION ( 1)ORBITER WING
 ETA                                           DEPENDENT VARIABLE CP
            .2990    .4270    .5340    .6730    .7800    .8870
  X/C
   .050
   .400
   .550                                   .0000
           .0000    .0000                 .0000             .0000
   .600                      .0000
   .70?
   .750    .0000                          .0000             .0000
   .800                      .0000
   .850             .0000                          .0000
   .930
   .950    .0000            -.2550        .0000
                                          .0000             .0000
```

```
                                        CAL T14-053 IA36 02 T1 S1  LOWER WING  POWER OFF              (LUF015)
MACH  ( 1) =     .902    ALPHA ( 3) =   -3.790
 SECTION ( 1)ORBITER WING                         DEPENDENT VARIABLE CP
ETA          .2990   .4270   .5340   .6730   .7800   .8870

  X/C
    .050                             .0000           .0000
    .400             .0000           .0000
    .550     .0000           .0000
    .600                                             .0000
    .700                             .0000
    .750     .0000           .0000           .0000
    .800             .0000
    .850                             .0000
    .900                    -.2840                   .0000
    .950     .0000                   .0000
MACH  ( 1) =     .903    ALPHA ( 4) =    -.010
 SECTION ( 1)ORBITER WING                         DEPENDENT VARIABLE CP
ETA          .2990   .4270   .5340   .6730   .7800   .8870

  X/C
    .050                             .0000           .0000
    .400             .0000           .0000
    .550     .0000           .0000
    .600                                             .0000
    .700                             .0000
    .750     .0000           .0000           .0000
    .800             .0000
    .850                             .0000
    .900                    -.2410                   .0000
    .950     .0000                   .0000
MACH  ( 1) =     .901    ALPHA ( 5) =    -.010
 SECTION ( 1)ORBITER WING                         DEPENDENT VARIABLE CP
ETA          .2990   .4270   .5340   .6730   .7800   .8870

  X/C
    .050                             .0000           .0000
    .400             .0000           .0000
    .550     .0000           .0000
    .600                                             .0000
    .700                             .0000
    .750     .0000           .0000           .0000
    .800             .0000
    .850                             .0000
    .900                    -.2530                   .0000
```

```
                                CAL T14-053 IA36 02 T1 S1  LOWER WING  POWER OFF          (LUF015)

MACH  ( 1) =     .901    ALPHA ( 5) =    -.010

 SECTION ( 1)ORBITER WING                  DEPENDENT VARIABLE CP

ETA         .2990   .4270   .5340   .6730   .7800   .8870

  X/C
     .950   .0000                   .0000

MACH  ( 1) =     .899    ALPHA ( 6) =    3.710

 SECTION ( 1)ORBITER WING                  DEPENDENT VARIABLE CP

ETA         .2990   .4270   .5340   .6730   .7800   .8870

  X/C
     .050                           .0000           .0000
     .400           .0000           .0000
     .550   .0000           .0000
     .600                                           .0000
     .700                           .0000
     .750   .0000           .0000           .0000
     .800           .0000
     .850                           .0000
     .900                  -.2270                   .0000
     .950   .0000                   .0000

MACH  ( 1) =     .901    ALPHA ( 7) =    3.700

 SECTION ( 1)ORBITER WING                  DEPENDENT VARIABLE CP

ETA         .2990   .4270   .5340   .6730   .7800   .8870

  X/C
     .050                           .0000           .0000
     .400           .0000           .0000
     .550   .0000           .0000
     .600                                           .0000
     .700                           .0000
     .750   .0000           .0000           .0000
     .800           .0000
     .850                           .0000
     .900                  -.2150                   .0000
     .950   .0000                   .0000
```

```
                                CAL T14-053 (IA35 02 T1 S1  LOWER WING  POWER OFF          (LUF015)
MACH  ( 1) =     .901    ALPHA ( 8) =    7.570
 SECTION ( 1)ORBITER WING                  DEPENDENT VARIABLE CP
ETA          .2990   .4270   .5340   .6730   .7800   .8870
  X/C
    .050                             .0000           .0000
    .400             .0000           .0000
    .550     .0000           .0000
    .600                                             .0000
    .700                             .0000
    .750     .0000           .0000           .0000
    .800             .0000
    .850                             .0000
    .900                    -.2060                   .0000
    .950     .0000                   .0000
```

```
DATE 05 NOV 75            TABULATED DATA FOR CAL T14-053 (IA36)                                                           PAGE  542

                                           CAL T14-053 IA36 02 T1 S1  LOWER WING  POWER OFF               (LUF018)    ( 09 OCT 73  )

              REFERENCE DATA                                                                                 PARAMETRIC DATA

SREF   =  2690.0000 SQ.FT.    XMRP   =    953.0000 IN.                                 BETA    =       .000   GP1     =     11.000
LPEF   =  1328.0000 IN.       YMRP   =       .0000 IN.                                 GY1     =     -9.000   GY2     =     -9.000
BREF   =  1328.0000 IN.       ZMRP   =    400.0000 IN.                                 GY3     =     -9.000
SCALE  =      .0190 SCALE

MACH  ( 1) =     1.201    ALPHA ( 1) =   -8.100

 SECTION ( 1)ORBITER WING                         DEPENDENT VARIABLE CP

ETA          .2990   .4270   .5340   .6730   .7800   .8870

  X/C
    .050                             .0000           .0000
    .400             .0000           .0000
    .550     .0000           .0000
    .600                                             .0000
    .700                             .0000
    .750     .0000           .0000           .0000
    .800             .0000
    .850                             .0000
    .900                    -.4410                   .0000
    .950     .0000                   .0000

MACH  ( 1) =     1.203    ALPHA ( 2) =   -6.120

 SECTION ( 1)ORBITER WING                         DEPENDENT VARIABLE CP

ETA          .2990   .4270   .5340   .6730   .7800   .8370

  X/C
    .050                             .0000           .0000
    .400             .0000           .0000
    .550     .0000           .0000
    .600                                             .0000
    .700                             .0000
    .750     .0000           .0000           .0000
    .800             .0000
    .850                             .0000
    .900                    -.4760                   .0000
    .950     .0000                   .0000
```

```
DATE 05 NOV 75              TABULATED DATA FOR CAL T14-053 (IA36)                                              PAGE  543

                                         CAL T14-053 IA36 02 T1 S1  LOWER WING  POWER OFF                (LUF018)

MACH  ( 1) =     1.202    ALPHA ( 3) =    -4.090

 SECTION ( 1)ORBITER WING                      DEPENDENT VARIABLE CP

ETA           .2990   .4270   .5340   .6730   .7800   .8970

  X/C
    .050                              .0000           .0000
    .400              .0000           .0000
    .500      .0000           .0000
    .600                                              .0000
    .700                              .0000
    .750      .0000           .0000           .0000
    .800              .0000
    .850                              .0000
    .900                     -.8370                   .0000
    .950      .0000                   .0000
```

```
DATE 05 NOV 75            TABULATED DATA FOR CAL T14-053 (IA36)

                                   CAL T14-053 IA36 02 T1 S1  LOWER WING  POWER OFF             (LUFO:9)    ( 09 OCT 73  )

                    REFERENCE DATA                                                                 PARAMETRIC DATA

SREF  =  2690.0000 SQ.FT.   XMRP  =    953.0000 IN.                                     BETA   =        .000  GP1    =     11.000
LREF  =  1328.0000 IN.      YMRP  =       .0000 IN.                                     GY1    =      -9.000  GY2    =     -9.000
BREF  =  1328.0000 IN.      ZMRP  =    400.0000 IN.                                     GY3    =      -3.000
SCALE =       .0190 SCALE

MACH  ( 1) =      .901    ALPHA ( 1) =   -8.100

 SECTION ( 1)ORBITER WING                    DEPENDENT VARIABLE CP

ETA          .2930   .4270   .5340   .6730   .7800   .8870

  X/C
    .050                             .0000           .0000
    .400             .0000           .0000
    .550     .0000           .0000
    .600                                             .0000
    .700                             .0000
    .750     .0000           .0000           .0000
    .800             .0000
    .850                             .0000
    .900                    -.1680                   .0000
    .950     .0000                   .0000

MACH  ( 1) =      .901    ALPHA ( 2) =   -6.090

 SECTION ( 1)ORBITER WING                    DEPENDENT VARIABLE CP

ETA          .2930   .4270   .5340   .6730   .7800   .8870

  X/C
    .050                             .0000           .0000
    .400             .0000           .0000
    .550     .0000           .0000
    .600                                             .0000
    .700                             .0000
    .750     .0000           .0000           .0000
    .800             .0000
    .850                             .0000
    .900                    -.1170                   .0000
    .950     .0000                   .0000
```

```
                                   CAL T14-053 IA35 02 T1 S1  LOWER WING  POWER OFF            (LUF019)
MACH  ( 1) =     .901    ALPHA ( 3) =   -4.090

 SECTION ( 1)ORBITER WING                   DEPENDENT VARIABLE CP

ETA            .2990   .4270   .5340   .6730   .7800   .8870

  X/C
    .050                               .0000           .0000
    .400               .0000           .0000
    .550       .0000           .0000
    .600                                               .0000
    .700                               .0000
    .750       .0000           .0000           .0000
    .800               .0000
    .850                               .0000
    .900                      -.1520                   .0000
    .950       .0000                   .0000
MACH  ( 1) =     .902    ALPHA ( 4) =     .010

 SECTION ( 1)ORBITER WING                   DEPENDENT VARIABLE CP

ETA            .2990   .4270   .5340   .6730   .7800   .8870

  X/C
    .050                               .0000           .0000
    .400               .0000           .0000
    .550       .0000           .0000
    .600                                               .0000
    .700                               .0000
    .750       .0000           .0000           .0000
    .800               .0000
    .850                               .0000
    .900                      -.0580                   .0000
    .950       .0000                   .0000
MACH  ( 1) =     .902    ALPHA ( 5) =    2.010

 SECTION ( 1)ORBITER WING                   DEPENDENT VARIABLE CP

ETA            .2990   .4270   .5340   .6730   .7800   .8870

  X/C
    .050                               .0000           .0000
    .400               .0000           .0000
    .550       .0000           .0000
    .600                                               .0000
    .700                               .0000
    .750       .0000           .0000           .0000
    .800               .0000
    .850                               .0000
    .900                      -.0880                   .0000
```

```
                          CAL T14-053 IA35 02 T1 S1  LOWER WING  POWER OFF          (LUF019)

MACH  ( 1) =      .902    ALPHA ( 5) =    2.010

 SECTION ( 1)ORBITER WING                     DEPENDENT VARIABLE CP

ETA          .2990   .4270   .5340   .6730   .7800   .8870

  X/C
   .950    .0000                     .0000
MACH  ( 1) =      .901    ALPHA ( 6) =    4.030

 SECTION ( 1)ORBITER WING                     DEPENDENT VARIABLE CP

ETA          .2990   .4270   .5340   .6730   .7800   .8870

  X/C
   .050                              .0000           .0000
   .400            .0000             .0000
   .550    .0000             .0000
   .600                                              .0000
   .700                              .0000
   .750    .0000             .0000           .0000
   .800            .0000
   .850                              .0000
   .900                     -.0950                   .0000
   .950    .0000                     .0000
MACH  ( 1) =      .905    ALPHA ( 7) =    6.020

 SECTION ( 1)ORBITER WING                     DEPENDENT VARIABLE CP

ETA          .2990   .4270   .5340   .6730   .7800   .8870

  X/C
   .050                              .0000           .0000
   .400            .0000             .0000
   .550    .0000             .0000
   .600                                              .0000
   .700                              .0000
   .750    .0000             .0000           .0000
   .800            .0000
   .850                              .0000
   .900                     -.1530                   .0000
   .950    .0000                     .0000
```

DATE 05 NOV 75 TABULATED DATA FOR CAL T14-053 (IA36)

CAL T14-053 IA36 02 T1 S1 LOWER WING POWER OFF (LUF019)

MACH (1) = .901 ALPHA (8) = 7.030

SECTION (1)ORBITER WING DEPENDENT VARIABLE CP

ETA	.2990	.4270	.5340	.6730	.7800	.8870
X/C						
.050				.0000		.0000
.400		.0000		.0000		
.550	.0000		.0000			
.600						.0000
.700				.0000		
.750	.0000		.0000		.0000	
.800		.0000				
.850				.0000		
.900			-.2180			.0000
.950	.0000			.0000		

```
DATE 05 NOV 75            TABULATED DATA FOR CAL T14-053 (IA36)                                                  PAGE  548
                                   CAL T14-053 IA36 02 T1 S1  LOWER WING  POWER OFF                (LUF020)   ( 09 OCT 73  )

                REFERENCE DATA                                                                          PARAMETRIC DATA

SREF  =  2690.0000 SQ.FT.   XMRP  =   953.0000 IN.                                      ALPHA  =      .000  GP1   =    11.000
LREF  =  1328.0000 IN.      YMRP  =      .0000 IN.                                      GY1    =    -9.000  GY2   =    -9.000
BREF  =  1328.0000 IN.      ZMRP  =   400.0000 IN.                                      GY3    =    -9.000
SCALE =      .0190 SCALE

MACH  ( 1) =      .903    BETA  ( 1) =   -6.080

 SECTION ( 1)ORBITER WING                        DEPENDENT VARIABLE CP

ETA           .2990   .4270   .5340   .6730   .7800   .8870

  X/C
   .050                               .0000           .0000
   .400               .0000           .0000
   .550       .0000           .0000
   .600                                               .0000
   .700                               .0000
   .750       .0000           .0000           .0000
   .800               .0000
   .850                               .0000
   .900                      -.0950                   .0000
   .950       .0000                   .0000

MACH  ( 1) =      .901    BETA  ( 2) =   -4.050

 SECTION ( 1)ORBITER WING                        DEPENDENT VARIABLE CP

ETA           .2990   .4270   .5340   .6730   .7800   .8870

  X/C
   .050                               .0000           .0000
   .400               .0000           .0000
   .550       .0000           .0000
   .600                                               .0000
   .700                               .0000
   .750       .0000           .0000           .0000
   .800               .0000
   .850                               .0000
   .900                      -.0950                   .0000
   .950       .0000                   .0000
```

```
                                        CAL T14-053 IA36 C2 T1 S1  LOWER WING  POWER OFF          (LUF020)
MACH  ( 1) =     .902    BETA  ( 3) =    -2.030

 SECTION ( 1)ORBITER WING                         DEPENDENT VARIABLE CP

ETA          .2990   .4270   .5340   .6730   .7800   .8870

  X/C
    .050                             .0000           .0000
    .400             .0000           .0000
    .550     .0000           .0000
    .600                                             .0000
    .700                             .0000
    .750     .0000           .0000           .0000
    .800             .0000
    .850                             .0000
    .900                    -.0780                   .0000
    .950     .0000                   .0000
MACH  ( 1) =     .900    BETA  ( 4) =      .000

 SECTION ( 1)ORBITER WING                         DEPENDENT VARIABLE CP

ETA          .2990   .4270   .5340   .6730   .7800   .8870

  X/C
    .050                             .0000           .0000
    .400             .0000           .0000
    .550     .0000           .0000
    .600                                             .0000
    .700                             .0000
    .750     .0000           .0000           .0000
    .800             .0000
    .850                             .0000
    .900                    -.1070                   .0000
    .950     .0000                   .0000
MACH  ( 1) =     .901    BETA  ( 5) =     4.050

 SECTION ( 1)ORBITER WING                         DEPENDENT VARIABLE CP

ETA          .2990   .4270   .5340   .6730   .7800   .8870

  X/C
    .050                             .0000           .0000
    .400             .0000           .0000
    .550     .0000           .0000
    .600                                             .0000
    .700                             .0000
    .750     .0000           .0000           .0000
    .800             .0000
    .850                             .0000
    .900                    -.0690                   .0000
```

```
DATE 05 NOV 75            TABULATED DATA FOR CAL T14-053 (IA36)
                                    CAL T14-053 IA36 02 T1 S1  LOWER WING  POWER OFF          (LUF020)

MACH  ( 1) =     .901    BETA  ( 5) =    4.050

 SECTION ( 1)ORBITER WING                      DEPENDENT VARIABLE CP

ETA          .2990   .4270   .5340   .6730   .7800   .8870

  X/C
    .950     .0000                   .0000
MACH  ( 1) =     .899    BETA  ( 6) =    6.090

 SECTION ( 1)ORBITER WING                      DEPENDENT VARIABLE CP

ETA          .2990   .4270   .5340   .6730   .7800   .8870

  X/C
    .050                             .0000           .0000
    .400             .0000           .0000
    .550     .0000           .0000
    .600                                             .0000
    .700                             .0000
    .750     .0000           .0000           .0000
    .800             .0000
    .850                             .0000
    .900                    -.0760                   .0000
    .950     .0000                   .0000
```

```
DATE 05 NOV 75            TABULATED DATA FOR CAL T14-053 (IA36)                                      PAGE  551
                                    CAL T14-053 IA36 02 T1 S1  LOWER WING  POWER ON         (LUF073)   ( 09 OCT 73  )
              REFERENCE DATA                                                                 PARAMETRIC DATA

SREF  =  2690.0000 SQ.FT.   XMRP  =   953.0000 IN.                          BETA    =     .000   OPR   =   28.310
LREF  =  1328.0000 IN.      YMRP  =      .0000 IN.                          SRMPR   =    2.020   GP1   =   11.000
BREF  =  1328.0000 IN.      ZMRP  =   400.0000 IN.                          GY1     =   -9.000   GP2   =     .000
SCALE =      .0190 SCALE                                                    GY2     =   -9.000   GP3   =     .000
                                                                            GY3     =   -9.000

MACH  ( 1) =      .901    ALPHA ( 1) =   -8.010

 SECTION ( 1)ORBITER WING                        DEPENDENT VARIABLE CP

ETA          .2990    .4270    .5340    .6730    .7800    .8870

  X/C
   .050                                 .0000             .0000
   .400               .0000             .0000
   .550      .0000             .0000
   .600                                                   .0000
   .700                                 .0000
   .750      .0000             .0000             .0000
   .800               .0000
   .850                                 .0000
   .900                       -.2840                      .0000
   .950      .0000                      .0000
MACH  ( 1) =      .902    ALPHA ( 2) =   -4.040

 SECTION ( 1)ORBITER WING                        DEPENDENT VARIABLE CP

ETA          .2990    .4270    .5340    .6730    .7800    .8870

  X/C
   .050                                 .0000             .0000
   .400               .0000             .0000
   .550      .0000             .0000
   .600                                                   .0000
   .700                                 .0000
   .750      .0000             .0000             .0000
   .800               .0000
   .850                                 .0000
   .900                       -.1900                      .0000
   .950      .0000                      .0000
```

```
                         CAL T14-053 IA36 02 T1 S1  LOWER WING  POWER ON          (LUF073)

MACH  ( 1) =     .901    ALPHA ( 3) =     .000

 SECTION ( 1)ORBITER WING                      DEPENDENT VARIABLE CP

ETA          .2990    .4270    .5340    .6730    .7800    .8870

  X/C
    .050                                .0000             .0000
    .400              .0000             .0000
    .550     .0000             .0000
    .600                                                  .0000
    .700                                .0000
    .750     .0000             .0000             .0000
    .800              .0000
    .850                                .0000
    .900                      -.1840                      .0000
    .950     .0000                      .0000
MACH  ( 1) =     .905    ALPHA ( 4) =    4.040

 SECTION ( 1)ORBITER WING                      DEPENDENT VARIABLE CP

ETA          .2990    .4270    .5340    .6730    .7800    .8870

  X/C
    .050                                .0000             .0000
    .400              .0000             .0000
    .550     .0000             .0000
    .600                                                  .0000
    .700                                .0000
    .750     .0000             .0000             .0000
    .800              .0000
    .850                                .0000
    .900                      -.2540                      .0000
    .950     .0000                      .0000
MACH  ( 1) =     .902    ALPHA ( 5) =    6.020

 SECTION ( 1)ORBITER WING                      DEPENDENT VARIABLE CP

ETA          .2990    .4270    .5340    .6730    .7800    .8870

  X/C
    .050                                .0000             .0000
    .400              .0000             .0000
    .550     .0000             .0000
    .600                                                  .0000
    .700                                .0000
    .750     .0000             .0000             .0000
    .800              .0000
    .850                                .0000
    .900                      -.1900                      .0000
```

```
                                      CAL T14-053 IA36 02 T1 S1  LOWER WING  POWER ON                  (LUF073)
MACH  ( 1) =      .902    ALPHA ( 5) =     6.020
 SECTION ( 1)ORBITER WING                          DEPENDENT VARIABLE CP
ETA          .2990   .4270   .5340   .6730   .7800   .8870
  X/C
    .950     .0000                   .0000
```

```
DATE 05 NOV 75            TABULATED DATA FOR CAL T14-053 (IA36)

                                 CAL T14-053 IA35 02 T1 S1  LOWER WING  POWER ON                  (LJF077)    ( 09 OCT 73 )

                   REFERENCE DATA                                                                       PARAMETRIC DATA

SREF  =  2690.0000 SQ.FT.   XMRP  =   953.0000 IN.                                     BETA   =       .000   CPR    =     36.200
LREF  =  1328.0000 IN.      YMRP  =      .0000 IN                                      SRMPR  =      2.330   GP1    =     11.000
BREF  =  1328.0000 IN.      ZMRP  =   400.0000 IN.                                     GY1    =     -9.000   GP2    =       .000
SCALE =      .0190 SCALE                                                               GY2    =     -9.000   GP3    =       .000
                                                                                       GY3    =     -9.000

MACH  ( 1) =     1.206    ALPHA ( 1) =    -8.040

 SECTION ( 1)ORBITER WING                    DEPENDENT VARIABLE CP

ETA          .2990    .4270    .5340    .6730    .7800    .8870

  X/C
    .050                                .0000             .0000
    .400              .0000             .0000
    .550     .0000             .0000
    .600                                                  .0000
    .700                                .0000
    .750     .0000             .0000             .0000
    .800              .0000
    .850                                .0000
    .900                      -.3000                      .0000
    .950     .0000                      .0000

MACH  ( 1) =     1.205    ALPHA ( 2) =    -4.010

 SECTION ( 1)ORBITER WING                    DEPENDENT VARIABLE CP

ETA          .2990    .4270    .5340    .6730    .7800    .8870

  X/C
    .050                                .0000             .0000
    .400              .0000             .0000
    .550     .0000             .0000
    .600                                                  .0000
    .700                                .0000
    .750     .0000             .0000             .0000
    .800              .0000
    .850                                .0000
    .900                      -.2820                      .0000
    .950     .0000                      .0000
```

```
                                      CAL T14-053 IA36 02 T1 S1  LOWER WING  POWER ON            (LUF077)
MACH  ( 1) =     1.202     ALPHA ( 3) =      .020

 SECTION ( 1)ORBITER WING                          DEPENDENT VARIABLE CP

ETA          .2990   .4270   .5340   .6730   .7800   .8870

  X/C
    .050                             .0000           .0000
    .400             .0000           .0000
    .550     .0000           .0000
    .600                                             .0000
    .700                             .0000
    .750     .0000           .0000           .0000
    .800             .0000
    .650                             .0000
    .900                    -.2880                   .0000
    .950     .0000                   .0000
MACH  ( 1) =     1.193     ALPHA ( 4) =     4.050

 SECTION ( 1)ORBITER WING                          DEPENDENT VARIABLE CP

ETA          .2990   .4270   .5340   .6730   .7800   .8870

  X/C
    .050                             .0000           .0000
    .400             .0000           .0000
    .550     .0000           .0000
    .600                                             .0000
    .700                             .0000
    .750     .0000           .0000           .0000
    .800             .0000
    .850                             .0000
    .900                    -.2820                   .0000
    .950     .0000                   .0000
MACH  ( 1) =     1.204     ALPHA ( 5) =     6.050

 SECTION ( 1)ORBITER WING                          DEPENDENT VARIABLE CP

ETA          .2990   .4270   .5340   .6730   .7800   .8870

  X/C
    .050                             .0000           .0000
    .400             .0000           .0000
    .550     .0000           .0000
    .600                                             .0000
    .700                             .0000
    .750     .0000           .0000           .0000
    .800             .0000
    .850                             .0000
    .900                    -.2870                   .0000
```

```
DATE 05 NOV 75            TABULATED DATA FOR CAL T14-053 (IA35)                                        PAGE  555

                                   CAL T14-053 IA35 02 T1 S1  LOWER WING  POWER ON                 (LUF077)

MACH  ( 1) =    1.204    ALPHA ( 5) =    6.050

 SECTION ( 1)ORBITER WING                    DEPENDENT VARIABLE CP

ETA          .2990   .4270   .5340   .6730   .7800   .8870

  X/C
    .950    .0000                   .0000
```

```
                                    CAL T14-053 IA36 01 T1 S1  LOWER WING  POWER OFF          (LUF081)   ( 09 OCT 73  )

              REFERENCE DATA                                                                  PARAMETRIC DATA

SREF  =  2690.0000 SQ.FT.   XMRP  =   953.0000 IN.                           BETA   =      .000   GP1    =      .000
LREF  =  1328.0000 IN.      YMRP  =      .0000 IN.                           GY1    =      .000   GP2    =      .000
BREF  =  1328.0000 IN.      ZMRP  =   400.0000 IN.                           GY2    =    -3.500   GP3    =      .000
SCALE =       .0190 SCALE                                                    GY3    =     3.500   RUDDER =      .000

MACH  ( 1) =    1.205    ALPHA ( 1) =   -8.110

 SECTION ( 1)ORBITER WING                        DEPENDENT VARIABLE CP

ETA          .2990   .4270   .5340   .6730   .7800   .8870

  X/C
   .050                              -.4760           -.3880
   .400                .1240         -.0030
   .550      .0000           .0170
   .600                                               -.3200
   .700                               .0000
   .750      .0000          -.2740            .0000
   .800               -.4670
   .850                              -.2300
   .900                     -.5770                    -.3960
   .950      .0000                   -.4300

MACH  ( 1) =    1.201    ALPHA ( 2) =   -4.070

 SECTION ( 1)ORBITER WING                        DEPENDENT VARIABLE CP

ETA          .2390   .4270   .5340   .6730   .7800   .8870

  X/C
   .050                              -.3320           -.2690
   .400                .2000          .0650
   .550      .0000           .0690
   .600                                               -.0910
   .700                               .0000
   .750      .0000          -.2240            .0000
   .800               -.4360
   .850                              -.1750
   .900                     -.5430                    -.4010
   .950      .0000                   -.3920
```

```
DATE 05 NOV 75          TABULATED DATA FOR CAL T14-053 (IA36)

                               CAL T14-053 IA36 01 T1 S1  LOWER WING  POWER OFF          (LUFCS1)

MACH  ( 1) =    1.204   ALPHA ( 3) =      .050

 SECTION ( 1)ORBITER WING                  DEPENDENT VARIABLE CP

ETA               .2990     .4270     .5340     .6730     .7800     .8870

  X/C
   .050                                         .0800               .1110
   .400                     .2730               .1670
   .550           .0000               .1300
   .600                                                            -.0360
   .700                                         .0000
   .750           .0000              -.1720               .0000
   .800                    -.4080
   .850                                        -.1200
   .900                              -.5090                        -.2990
   .950           .0000                        -.3510

MACH  ( 1) =    1.202   ALPHA ( 4) =     4.020

 SECTION ( 1)ORBITER WING                  DEPENDENT VARIABLE CP

ETA               .2990     .4270     .5340     .6730     .7800     .8870

  X/C
   .050                                         .3660               .3760
   .400                     .3170               .2570
   .550           .0000               .1790
   .600                                                             .0200
   .700                                         .0000
   .750           .0000              -.1290               .0000
   .800                    -.3730
   .850                                        -.0660
   .900                              -.4720                        -.3270
   .950           .0000                        -.3080

MACH  ( 1) =    1.198   ALPHA ( 5) =     6.000

 SECTION ( 1)ORBITER WING                  DEPENDENT VARIABLE CP

ETA               .2990     .4270     .5340     .6730     .7800     .8870

  X/C
   .050                                         .4490               .4600
   .400                     .3250               .2770
   .550           .0000               .1880
   .600                                                             .0470
   .700                                         .0000
   .750           .0000              -.1180               .0000
   .800                    -.3640
   .850                                        -.0500
   .900                              -.4630                        -.3070
```

```
DATE 05 NOV 75          TABULATED DATA FOR CAL T14-053 (IA36)                                                    PAGE  559

                                          CAL T14-053 IA36 C1  1 S1  LOWER WING  POWER OFF               (LUF081)

MACH  ( 1) =    1.199    ALPHA ( 5) =    6.000

 SECTION ( 1)ORBITER WING                       DEPENDENT VARIABLE CP

ETA          .2990   .4270   .5340   .6730   .7800   .8870

  X/C
   .950    .0000                    -.2890
```

```
                                     CAL T14-053 IA36 01 T1 S1  LOWER WING  POWER OFF           (LUF082)   ( 09 OCT 73  )

                REFERENCE DATA                                                                        PARAMETRIC DATA

SREF  =  2690.0000 SQ.FT.    XMRP  =    953.0000 IN.                                      ALPHA  =      .000   GP1    =       .000
LREF  =  1328.0000 IN.       YMRP  =       .0000 IN.                                      GY1    =      .000   GP2    =       .000
BREF  =  1328.0000 IN.       ZMRP  =    400.0000 IN.                                      GY2    =    -3.500   GP3    =       .000
SCALE =      .0190 SCALE                                                                  GY3    =     3.500   RUDDER =       .000

MACH  ( 1) =    1.202    BETA  ( 1) =   -6.080

 SECTION ( 1)ORBITER WING                     DEPENDENT VARIABLE CP

ETA           .2990   .4270   .5340   .6730   .7800   .8870

  X/C
    .050                              -.2530          -.1860
    .400             -.1600           -.1320
    .550     .0000           -.1630
    .600                                              -.1820
    .700                               .0000
    .750     .0000           -.3220           .0000
    .800             -.3380
    .850                              -.2770
    .900                     -.4550                   -.4530
    .950     .0000                    -.4440

MACH  ( 1) =    1.203    BETA  ( 2) =   -3.050

 SECTION ( 1)ORBITER WING                     DEPENDENT VARIABLE CP

ETA           .2990   .4270   .5340   .6730   .7800   .8870

  X/C
    .050                              -.2060          -.1160
    .400             -.0350           -.0310
    .550     .0000           -.0490
    .600                                              -.1110
    .700                               .0000
    .750     .0000           -.2460           .0000
    .800             -.3750
    .850                              -.2050
    .900                     -.4940                   -.3760
    .950     .0000                    -.3850
```

```
                                      CAL T14-053 IA36 01 T1 S1  LOWER WING  POWER OFF                 (LUF082)

MACH  ( 1) =    1.204    BETA  ( 3) =     .000

 SECTION ( 1)ORBITER WING                     DEPENDENT VARIABLE CP

ETA          .2990   .4270   .5340   .6730   .7800   .8870

  X/C
    .050                             .0710           .1110
    .400             .2700           .1710
    .550     .0000           .1270
    .600                                            -.0380
    .700                             .0000
    .750     .0000          -.1730           .0000
    .800            -.4080
    .850                            -.1200
    .900                    -.5080                  -.3100
    .950     .0000                  -.3500

MACH  ( 1) =    1.201    BETA  ( 4) =    3.050

 SECTION ( 1)ORBITER WING                     DEPENDENT VARIABLE CP

ETA          .2990   .4270   .5340   .6730   .7800   .8870

  X/C
    .050                             .2280           .1880
    .400             .3380           .2110
    .550     .0000           .1650
    .600                                            -.0130
    .700                             .0000
    .750     .0000          -.1490           .0000
    .800            -.3680
    .850                            -.0990
    .900                    -.4890                  -.2980
    .950     .0000                  -.3320

MACH  ( 1) =    1.203    BETA  ( 5) =    6.080

 SECTION ( 1)ORBITER WING                     DEPENDENT VARIABLE CP

ETA          .2990   .4270   .5340   .6730   .7800   .8870

  X/C
    .050                             .3150           .2500
    .400             .3870           .2520
    .550     .0000           .2000
    .600                                             .0150
    .700                             .0000
    .750     .0000          -.1240           .0000
    .800            -.3460
    .850                            -.0720
    .900                    -.4750                  -.3060
```

```
DATE 05 NOV 75             TABULATED DATA FOR CAL T14-053 (IA36)                                                 PAGE  552
                                         CAL T14-053 IA36 01 T1 S1  LOWER WING  POWER OFF              (LUF082)

MACH  ( 1) =    1.203   BETA  ( 5) =    6.080

 SECTION ( 1)ORBITER WING                  DEPENDENT VARIABLE CP

ETA          .2390   .4270   .5340   .6730   .7800   .8870

  X/C
    .950    .0000                    -.3130
```

```
DATE 05 NOV 75           TABULATED DATA FOR CAL T14-053 (IA36)                                                  PAGE  563

                                   CAL T14-053 IA35 O1 T1 S1  LOWER WING  POWER ON                   (LUF083)    ( 09 OCT 73  )

                  REFERENCE DATA                                                                         PARAMETRIC DATA

SREF  =  2690.0000 SQ.FT.   XMRP  =   953.0000 IN.                                  BETA   =      .000  OPR    =    36 200
LREF  =  1328.0000 IN.      YMRP  =      .0000 IN.                                  SRMPR  =     2.330  GP1    =      .000
BREF  =  1328.0000 IN.      ZMRP  =   400.0000 IN.                                  GY1    =      .000  GP2    =      .000
SCALE =      .0190 SCALF                                                            GY2    =    -3.500  GP3    =      .000
                                                                                    GY3    =     3.500  RUDDER =      .000

MACH  ( 1) =     1.199    ALPHA ( 1) =    -8.090

 SECTION ( 1)ORBITER WING                         DEPENDENT VARIABLE CP

ETA             .2990    .4270    .5340    .6730    .7800    .8870

  X/C
   .050                                    -.4710            -.3740
   .400                  .1350              .0200
   .550         .0000             .0410
   .600                                                      -.3290
   .700                                     .0000
   .750         .0000            -.2610              .0000
   .800                 -.3910
   .850                                    -.2190
   .900                          -.5580                      -.3860
   .950         .0000                      -.4240

MACH  ( 1) =     1.196    ALPHA ( 2) =    -4.050

 SECTION ( 1)ORBITER WING                         DEPENDENT VARIABLE CP

ETA             .2990    .4270    .5340    .6730    .7800    .8870

  X/C
   .050                                    -.3240            -.2340
   .400                  .2290              .1120
   .550         .0000             .0980
   .600                                                      -.0710
   .700                                     .0000
   .750         .0000            -.2100              .0000
   .800                 -.3990
   .850                                    -.1550
   .900                          -.5350                      -.3890
   .950         .0000                      -.3790
```

REPRODUCIBILITY OF THE
ORIGINAL PAGE IS POOR

```
                                       CAL T14-053 IA36 01 T1 S1  LOWER WING  POWER ON                  (LUF083)

MACH  ( 1) =     1.200    ALPHA ( 3) =     -.050

 SECTION ( 1)ORBITER WING                         DEPENDENT VARIABLE CP

ETA          .2990   .4270   .5340   .6730   .7800   .8870

  X/C
    .050                             .1320           .1410
    .400             .3010           .1930
    .550    .0000            .1520
    .600                                            -.0180
    .700                             .0000
    .750    .0000           -.1560           .0000
    .800            -.3920
    .850                            -.1030
    .900                    -.5030                  -.2940
    .950    .0000                   -.3380
MACH  ( 1) =     1.196    ALPHA ( 4) =     3.990

 SECTION ( 1)ORBITER WING                         DEPENDENT VARIABLE CP

ETA          .2990   .4270   .5340   .6730   .7800   .8870

  X/C
    .050                             .3910           .4150
    .400             .3510           .2740
    .550    .0000            .2070
    .600                                             .0420
    .700                             .0000
    .750    .0000           -.1130           .0000
    .800            -.3570
    .850                            -.0540
    .900                    -.4660                  -.3130
    .950    .0000                   -.2990
MACH  ( 1) =     1.200    ALPHA ( 5) =     6.060

 SECTION ( 1)ORBITER WING                         DEPENDENT VARIABLE CP

ETA          .2990   .4270   .5340   .6730   .7800   .8870

  X/C
    .050                             .4870           .5070
    .400             .3580           .3090
    .550    .0000            .2220
    .600                                             .0780
    .700                             .0000
    .750    .0000           -.0920           .0000
    .800            -.3370
    .850                            -.0280
    .900                    -.4470                  -.2840
```

```
DATE 05 NOV 75          TABULATED DATA FOR CAL T14-053 (IA36)                                                  PAGE  565

                                     CAL T14-053 IA36 O1 T1 S1  LOWER WING  POWER ON                (LUF083)

MACH  ( 1) =    1.200   ALPHA ( 5) =    6.060

 SECTION ( 1)ORBITER WING                         DEPENDENT VARIABLE CP

E.A          .2990   .4270   .5340   .6730   .7800   .8870

  X/C
    .950    .0000                   -.2720
```

```
DATE 05 NOV 75            TABULATED DATA FOR CAL T14-053 (IA36)                                                   PAGE  565

                                       CAL T14-053 IA36 O1 T1 S1  LOWER WING  POWER ON              (LUF084)    ( 09 OCT 73  )

                REFERENCE DATA                                                                      PARAMETRIC DATA

SREF  =  2690.0000 SQ.FT.   XMRP  =   953.0000 IN.                                     ALPHA  =      .000   CPR    =    35.200
LREF  =  1323.0000 IN.      YMRP  =      .0000 IN.                                     SRMPR  =     2.330   CP1    =      .000
BREF  =  1328.0000 IN.      ZMRP  =   400.0000 IN.                                     GY1    =      .000   CP2    =      .000
SCALE =       .0190 SCALE                                                              GY2    =    -3.500   CP3    =      .000
                                                                                       GY3    =     3.500   RUDDER =      .000

MACH  ( 1) =    1.196    BETA  ( 1) =   -6.070

 SECTION ( 1)ORBITER WING                          DEPENDENT VARIABLE CP

ETA          .2990    .4270    .5340    .6730    .7800    .8870

  X/C
    .050                               -.2260             -.1700
    .400             -.1330            -.1210
    .550    .0000             -.1360
    .600                                                  -.1570
    .700                                .0000
    .750    .0000             -.2890             .0000
    .800             -.2610
    .850                               -.2690
    .900                      -.3920                      -.4420
    .950    .0000                      -.4270

MACH  ( 1) =    1.201    BETA  ( 2) =   -3.050

 SECTION ( 1)ORBITER WING                          DEPENDENT VARIABLE CP

ETA          .2990    .4270    .5340    .6730    .7800    .88

  X/C
    .050                               -.1250             -.0800
    .400             -.0050            -.0140
    .550    .0000             -.0230
    .600                                                  -.0890
    .700                                .0000
    .750    .0000             -.2270             .0000
    .800             -.3310
    .850                               -.1910
    .900                      -.4710                      -.3460
    .950    .0000                      -.3720
```

```
                                    CAL T14-053 IA36 O1 T1 S1  LOWER WING  POWER ON              (LUF094)
MACH  ( 1) =    1.198    BETA  ( 3) =      .000

 SECTION ( 1)ORBITER WING                           DEPENDENT VARIABLE CP

ETA          .2990   .4270   .5340   .6730   .7800   .8870

  X/C
    .050                                 .1110           .1450
    .400                 .3020           .1910
    .550     .0000               .1510
    .600                                                -.0190
    .700                                 .0000
    .750     .0000              -.1580           .0000
    .800                -.3960
    .850                                -.1670
    .900                        -.5060                  -.2320
    .950     .0000                      -.3410
MACH  ( 1) =    1.199    BETA  ( 4) =     3.050

 SECTION ( 1)ORBITER WING                           DEPENDENT VARIABLE CP

ETA          .2990   .4270   .5340   .6730   .7800   .8870

  X/C
    .050                                 .2640           .2180
    .400                 .3710           .2360
    .550     .0000               .1970
    .600                                                 .0110
    .700                                 .0000
    .750     .0000              -.1230           .0000
    .800                -.3440
    .850                                -.0770
    .900                        -.4790                  -.2930
    .950     .0000                      -.3160
MACH  ( 1) =    1.199    BETA  ( 5) =     6.070

 SECTION ( 1)ORBITER WING                           DEPENDENT VARIABLE CP

ETA          .2990   .4270   .5340   .6730   .7800   .8870

  X/C
    .050                                 .3440           .2900
    .400                 .4180           .2800
    .550     .0000               .2300
    .600                                                 .0430
    .700                                 .0000
    .750     .0000              -.1020           .0000
    .800                -.3240
    .850                                -.0470
    .900                        -.4660                  -.2940
```

```
                                             CAL T14-053 IA36 01 T1 S1  LOWER WING  POWER ON               (LUF084)

MACH  ( 1) =    1.199    BETA  ( 5) =    6.070

 SECTION ( 1)ORBITER WING                    DEPENDENT VARIABLE CP

ETA           .2990   .4270   .5340   .6730   .7800   .8870

  X/C
   .950     .0000                    -.2990
```

```
                                        CAL T14-053 IA36 01 T1 S1  LOWER WING  POWER ON            (LUF085)   ( 09 OCT 73  )

                  REFERENCE DATA                                                                        PARAMETRIC DATA

 SREF   =  2690.0000 SQ.FT.    XMRP   =    953.0000 IN.                               BETA     =      .000   OPR      =     95.800
 LREF   =  1328.0000 IN.       YMRP   =       .0000 IN.                               SRMPR    =     2.330   OP1      =       .000
 BREF   =  1328.0000 IN.       ZMRP   =   400.0000 IN.                                GY1      =      .000   OP2      =       .000
 SCALE  =       .0190 SCALE                                                           GY2      =     3.500   GP3      =       .000
                                                                                      GY3      =     3.500   RUDDER   =       .000

 MACH   ( 1) =     1.195    ALPHA ( 1) =    -8.070

  SECTION ( 1)ORBITER WING                            DEPENDENT VARIABLE CP

 ETA            .2990    .4270    .5340    .6730    .7800    .8870

   X/C
    .050                                   -.4720            -.3660
    .400                 .1440             .0270
    .550        .0000             .0450
    .600                                                     -.3200
    .700                                   .0000
    .750        .0000            -.2550             .0000
    .800                -.3610
    .850                                   -.2200
    .900                         -.5390                      -.3740
    .950        0000                       -.4280
 MACH   ( 1) =     1.194    ALPHA ( 2) =    -4.090

  SECTION ( 1)ORBITER WING                            DEPENDENT VARIABLE CP

 ETA            .2990    .4270    .5340    .6730    .7800    .8870

   X/C
    .050                                   -.3160            -.2470
    .400                 .2260             .1120
    .550        .0000             .0960
    .600                                                     -.0750
    .700                                   .0000
    .750        .0000            -.2050             .0000
    .800                -.3680
    .850                                   -.1620
    .900                         -.5240                      -.3870
    .950        .0000                      -.3800
```

```
DATE 05 NOV 75            TABULATED DATA FOR CAL T14-053 (IA36)

                                  CAL T14-053 IA36 01 T1 S1  LOWER WING  POWER ON            (LUF085)

MACH  ( 1) =     1.196    ALPHA ( 3) =     -.060

 SECTION ( 1)ORBITER WING                      DEPENDENT VARIABLE CP

ETA           .2990    .4270    .5340    .6730    .7800    .8870

  X/C
   .050                                   .0940             .1[illegible]90
   .400                .3050              .1900
   .550       .0000             .1580
   .600                                                     -.0210
   .700                                   .0000
   .750       .0000            -.1530              .0000
   .800               -.3550
   .850                                  -.1040
   .900                        -.5030                       -.2940
   .950       .0000                      -.3420

MACH  ( 1) =     1.199    ALPHA ( 4) =     5.970

 SECTION ( 1)ORBITER WING                      DEPENDENT VARIABLE CP

ETA           .2990    .4270    .5340    .6730    .7800    .8870

  X/C
   .050                                   .4620             .5020
   .400                .3570              .[illegible]140
   .550       .0000             .2290
   .600                                                     .0820
   .700                                   .0000
   .750       .0000            -.0840              .0000
   .800               -.2860
   .850                                  -.0200
   .900                        -.4340                       -.2800
   .950       .0000                      -.2680
```

```
DATE 05 NOV 75            TABULATED DATA FOR CAL T14-053 (IA36)                                                                  PAGE  57

                                   CAL T14-053 IA36 O1 T1 S1  LOWER WING  POWER ON                       (LUF086)    ( 09 OCT 73 )

              REFERENCE DATA                                                                                  PARAMETRIC DATA

SREF   =  2690.0000 SQ.FT.   XMRP  =   953.0000 IN.                                   BETA    =      .000   CPR     =     56.700
LREF   =  1328.0000 IN.      YMRP  =      .0000 IN.                                   SRMPR   =     2.330   GP1     =       .000
BREF   =  1328.0000 IN.      ZMRP  =   400.0000 IN.                                   GY1     =      .000   GP2     =       .000
SCALE  =        .0190 SCALE                                                           GY2     =    -3.500   GP3     =       .000
                                                                                      GY3     =     3.500   RUDDER  =       .000

MACH  ( 1) =     1.191    ALPHA ( 1) =   -8.120

 SECTION ( 1)ORBITER WING                          DEPENDENT VARIABLE CP

ETA          .2990   .4270   .5340   .6730   .7800   .8870

  X/C
    .050                              -.4720          -.3740
    .400             .1510             .0220
    .550    .0000            .0400
    .600                                               .3330
    .700                               .0000
    .750    .0000           -.2650             .0000
    .800            -.3900
    .850                              -.2260
    .900                    -.5670                    -.3890
    .950    .0000                     -.4310

MACH  ( 1) =     1.196    ALPHA ( 2) =   -4.090

 SECTION ( 1)ORBITER WING                          DEPENDENT VARIABLE CP

ETA          .2990   .4270   .5340   .6730   .7800   .8870

  X/C
    .050                              -.3150          -.2260
    .400             .2330             .1160
    .550    .0000            .1030
    .600                                              -.0660
    .700                               .0000
    .750    .0000           -.2040             .0000
    .800            -.3950
    .850                              -.1590
    .900                    -.5360                    -.3840
    .950    .0000                     -.3800
```

```
                                    CAL T14-053 IA36 01 T1 S1  LOWER WING  POWER ON            (LUF086)

MACH  ( 1) =     1.199    ALPHA ( 3) =     -.070

 SECTION ( 1)ORBITER WING                  DEPENDENT VARIABLE CP

ETA           .2990     .4270     .5340     .6730     .7800     .8870

  X/C
   .050                                     .0980               .1590
   .400                 .3110               .1960
   .550       .0000               .1540
   .600                                                        -.0140
   .700                                     .0000
   .750       .0000              -.1540               .0000
   .800                -.3730
   .850                                    -.1020
   .900                          -.5010                        -.2940
   .950       .0000                        -.3370

MACH  ( 1) =     1.199    ALPHA ( 4) =     3.980

 SECTION ( 1)ORBITER WING                  DEPENDENT VARIABLE CP

ETA           .2990     .4270     .5340     .6730     .7800     .8870

  X/C
   .050                                     .4030               .4170
   .400                 .3620               .2830
   .550       .0000               .2180
   .600                                                         .0480
   .700                                     .0000
   .750       .0000              -.1070               .0000
   .800                -.3470
   .850                                    -.0440
   .900                          -.4590                        -.3070
   .950       .0000                        -.2890

MACH  ( 1) =     1.200    ALPHA ( 5) =     6.060

 SECTION ( 1)ORBITER WING                  DEPENDENT VARIABLE CP

ETA           .2990     .4270     .5340     .6730     .7800     .8870

  X/C
   .050                                     .4920               .5200
   .400                 .3720               .3140
   .550       .0000               .2320
   .600                                                         .0820
   .700                                     .0000
   .750       .0000              -.0800               .0000
   .800                -.3190
   .850                                    -.0210
   .900                          -.4370                        -.2770
```

```
                                      CAL T14-053 IA36 01 T1 S1  LOWER WING  POWER ON              (LUF086)
MACH  ( 1) =    1.200    ALPHA ( 5) =    6.060
 SECTION ( 1)ORBITER WING                    DEPENDENT VARIABLE CP
ETA           .2990   .4270   .5340   .6730   .7800   .8870
  X/C
    .950      .0000                  -.2630
```

```
DATE 05 NOV 75            TABULATED DATA FOR CAL T14-053 (IA36)                                                   PAGE  574

                                  CAL T14-053 IA36 O1 T1 S1  LOWER WING  POWER ON                (LUF087)   ( 09 OCT 73  )

               REFERENCE DATA                                                                        PARAMETRIC DATA

SREF  =  2690.0000 SQ.FT.   XMRP  =   953.0000 IN.                                      BETA    =      .000   OPR     =    35.200
LREF  =  1328.0000 IN.      YMRP  =      .0000 IN.                                      SRMPR   =     3.170   GP1     =      .000
BREF  =  1328.0000 IN.      ZMRP  =   400.0000 IN.                                      GY1     =      .000   GP2     =      .000
SCALE =      .0190 SCALE                                                                GY2     =    -3.500   GP3     =      .000
                                                                                        GY3     =     3.500   RUDDER  =      .000

MACH  ( 1) =    1.197   ALPHA ( 1) =   -8.110

 SECTION ( 1)ORBITER WING                 DEPENDENT VARIABLE CP

ETA          .2990   .4270   .5340   .6730   .7800   .8870

  X/C
    .050                             -.4690          -.3840
    .400              .1160           .0040
    .550     .0000            .0140
    .600                                             -.3240
    .700                              .0000
    .750     .0000           -.2860           .0000
    .800             -.4870
    .850                             -.2340
    .900                     -.5870                  -.3910
    .950     .0000                   -.4360

MACH  ( 1) =    1.201   ALPHA ( 2) =   -3.880

 SECTION ( 1)ORBITER WING                 DEPENDENT VARIABLE CP

ETA          .2990   .4270   .5340   .6730   .7800   .8870

  X/C
    .050                             -.2880          -.2050
    .400              .2450           .1300
    .550     .0000            .1160
    .600                                             -.0630
    .700                              .0000
    .750     .0000           -.1960           .0000
    .800             -.3650
    .850                             -.1460
    .900                     -.5130                  -.3760
    .950     .0000                   -.3670
```

```
                                   CAL T14-053 IA36 01 T1 S1  LOWER WING  POWER ON            (LUF087)
MACH  ( 1) =    1.198   ALPHA ( 3) =      .170

 SECTION ( 1)ORBITER WING                   DEPENDENT VARIABLE CP

ETA          .2990   .4270   .5340   .6730   .7800   .8870

  X/C
    .050                             .1410           .1660
    .400             .3210           .2060
    .550     .0000           .1770
    .600                                            -.0060
    .700                             .0000
    .750     .0000          -.1440           .0000
    .800            -.3530
    .850                            -.0940
    .900                    -.4900                  -.2900
    .950     .0000                  -.3310
MACH  ( 1) =    1.198   ALPHA ( 4) =     4.230

 SECTION ( 1)ORBITER WING                   DEPENDENT VARIABLE CP

ETA          .2990   .4270   .5340   .6730   .7800   .8870

  X/C
    .050                             .4020           .4320
    .400             .3710           .2870
    .550     .0000           .2330
    .600                                             .0560
    .700                             .0000
    .750     .0000          -.0970           .0000
    .800            -.3160
    .850                            -.0410
    .900                    -.4510                  -.3030
    .950     .0000                  -.2880
MACH  ( 1) =    1.197   ALPHA ( 5) =     6.130

 SECTION ( 1)ORBITER WING                   DEPENDENT VARIABLE CP

ETA          .2990   .4270   .5340   .6730   .7800   .8870

  X/C
    .050                             .4960           .5190
    .400             .3760           .3120
    .550     .0000           .2460
    .600                                             .0900
    .700                             .0000
    .750     .0000          -.0790           .0000
    .800            -.2810
    .850                            -.0170
    .900                    -.4310                  -.2770
```

REPRODUCIBILITY OF THE
ORIGINAL PAGE IS POOR

```
DATE 05 NOV 75            TABULATED DATA FOR CAL T14-053 (IA36)                                                      PAGE  576

                                            CAL T14-053 IA36 01 T1 S1  LOWER WING  POWER ON               (LUF087)

MACH  ( 1) =    1.197    ALPHA ( 5) =    6.130

 SECTION ( 1)ORBITER WING                    DEPENDENT VARIABLE CP

ETA          .2990   .4270   .5340   .6730   .7800   .8870

  X/C
   .950    .0000                   -.2650
```

```
DATE 05 NOV 75              TABULATED DATA FOR CAL T14-053 (IA36)
                                                                                       PAGE  577
                                      CAL T14-053 IA36 O1 T1 S1  LOWER WING  POWER OFF
                                                                                  (LUF089)   ( 09 OCT 73  )
                 REFERENCE DATA
                                                                              PARAMETRIC DATA
SREF  =  2690.0000 SQ.FT.   XMRP  =   953.0000 IN.
LREF  =  1328.0000 IN.      YMRP  =      .0000 IN.              BETA   =      .000   GP1    =      .000
BREF  =  1328.0000 IN.      ZMRP  =   400.0000 IN.              GY1    =      .000   GP2    =      .000
SCALE =      .0190 SCALE                                        GY2    =    -3.500   GP3    =      .000
                                                                GY3    =     3.500   RUDDER =      .000
MACH  ( 1) =      .833    ALPHA ( 1) =   -8.070

 SECTION ( 1)ORBITER WING                    DEPENDENT VARIABLE CP

ETA            .2990    .4270    .5340    .6730    .7800    .8870

  X/C
   .050                                   -.7010            -.6780
   .400                 -.0160            -.2290
   .550       .0000              -.2560
   .600                                                     -.5170
   .700                                    .0000
   .750       .0000              -.5320             .0000
   .800                 -.4140
   .850                                   -.5490
   .900                          -.1330                     -.1640
   .950       .0000                       -.1560
MACH  ( 1) =      .902    ALPHA ( 2) =   -4.050

 SECTION ( 1)ORBITER WING                    DEPENDENT VARIABLE CP

ETA            .2990    .4270    .5340    .6730    .7800    .8870

  X/C
   .050                                   -.4530            -.5240
   .400                  .0460            -.1530
   .550       .0000              -.1840
   .600                                                     -.4130
   .700                                    .0000
   .750       .0000              -.4920             .0000
   .800                 -.3900
   .850                                   -.5090
   .900                          -.1020                     -.0440
   .950       .0000                       -.2130
```

```
                                 CAL T14-053 IA36 01 T1 S1  LOWER WING  POWER OFF          (LUF088)

MACH  ( 1) =     .899   ALPHA ( 3) =    -.030

 SECTION ( 1)ORBITER WING                  DEPENDENT VARIABLE CP

ETA          .2990   .4270   .5340   .6730   .7800   .8870

  X/C
   .050                              .0000           -.1010
   .400              .0770          -.0840
   .550      .0000          -.1540
   .600                                              -.3630
   .700                              .0000
   .750      .0000          -.4630           .0000
   .800             -.3930
   .850                             -.4460
   .900                     -.0870                   -.2790
   .950      .0000                  -.2810
MACH  ( 1) =     .900   ALPHA ( 4) =    4.000

 SECTION ( 1)ORBITER WING                  DEPENDENT VARIABLE CP

ETA          .2990   .4270   .5340   .6730   .7800   .8870

  X/C
   .050                              .2140            .1780
   .400              .1170           .0010
   .550      .0000          -.1080
   .600                                              -.2790
   .700                              .0000
   .750      .0000          -.3990           .0000
   .800             -.3930
   .850                             -.3760
   .900                     -.1640                   -.4260
   .950      .0000                  -.4430
MACH  ( 1) =     .901   ALPHA ( 5) =    5.970

 SECTION ( 1)ORBITER WING                  DEPENDENT VARIABLE CP

ETA          .2990   .4270   .5340   .6730   .7800   .8870

  X/C
   .050                              .2950            .2620
   .400              .1290           .0380
   .550      .0000          -.0820
   .600                                              -.2410
   .700                              .0000
   .750      .0000          -.3970           .0000
   .800             -.4180
   .850                             -.3480
   .900                     -.2300                   -.4920
```

```
DATE 05 NOV 75            TABULATED DATA FOR CAL T14-053 (IA36)                                                     PAGE  579
                                          CAL T14-053 IA36 01 T1 S1  LOWER WING  POWER OFF               (LUF088)
MACH  ( 1) =      .901    ALPHA ( 5) =    5.970
 SECTION ( 1)ORBITER WING                    DEPENDENT VARIABLE CP
ETA           .2990   .4270   .5340   .6730   .7800   .8870
  X/C
    .950    .0000                   -.5130
```

```
                                       CAL T14-053 IA36 01 T1 S1  LOWER WING  POWER OFF                 (LUF089)    ( 09 OCT 73 )

              REFERENCE DATA                                                                        PARAMETRIC DATA

SREF  =  2630.0000 SQ.FT.   XMRP  =   953.0000 IN.                                       ALPHA  =     .000  GP1    =       .000
LREF  =  1328.0000 IN.      YMRP  =      .0000 IN.                                       GY1    =     .000  GP2    =       .000
BREF  =  1328.0000 IN.      ZMRP  =   400.0000 IN.                                       GY2    =   -3.500  GP3    =       .000
SCALE =       .0190 SCALE                                                                GY3    =    3.500  RUDDER =       .000

MACH  ( 1) =      .903    BETA  ( 1) =   -6.080

 SECTION ( 1)ORBITER WING                  DEPENDENT VARIABLE CP

ETA         .2990   .4270   .5340   .6730   .7800   .8870

  X/C
    .050                           -.2040          -.3210
    .400           -.1400          -.2000
    .550    .0000          -.2720
    .600                                           -.4200
    .700                            .0000
    .750    .0000          -.4190           .0000
    .800           -.2950
    .850                           -.4670
    .900                   -.1250                  -.1190
    .950    .0000                  -.2840
MACH  ( 1) =      .899    BETA  ( 2) =   -3.050

 SECTION ( 1)ORBITER WING                  DEPENDENT VARIABLE CP

ETA         .2990   .4270   .5340   .6730   .7800   .8870

  X/C
    .050                           -.1070          -.2260
    .400           -.0950          -.1770
    .550    .0000          -.2460
    .600                                           -.3950
    .700                            .0000
    .750    .0000          -.4530           .0000
    .800           -.3430
    .850                           -.4990
    .900                   -.1020                  -.2070
    .950    .0000                  -.2200
```

```
                                  CAL T14-053 IA36 01 T1 S1  LOWER WING  POWER OFF           (LUF089)
MACH  ( 1) =     .902    BETA  ( 3) =     .000
 SECTION ( 1)ORBITER WING                          DEPENDENT VARIABLE CP
ETA          .2990   .4270   .5340   .6730   .7800   .8870
  X/C
    .050                              .0030          -.1070
    .400             .0730          -.0860
    .550     .0000          -.1460
    .600                                             -.3570
    .700                              .0000
    .750     .0000          -.4420           .0000
    .800            -.3900
    .850                             -.4530
    .900                    -.0840                   -.2740
    .950     .0000                   -.2710
MACH  ( 1) =     .901    BETA  ( 4) =    3.050
 SECTION ( 1)ORBITER WING                          DEPENDENT VARIABLE CP
ETA          .2990   .4270   .5340   .6730   .7800   .8870
  X/C
    .050                              .1140          -.0210
    .400             .1390           -.0290
    .550     .0000          -.1090
    .600                                             -.3340
    .700                              .0000
    .750     .0000          -.4520           .0000
    .800            -.3940
    .850                             -.4200
    .900                    -.0890                   -.3280
    .950     .0000                   -.4420
MACH  ( 1) =     .901    BETA  ( 5) =    6.090
 SECTION ( 1)ORBITER WING                          DEPENDENT VARIABLE CP
ETA          .2990   .4270   .5340   .6730   .7800   .8870
  X/C
    .050                              .1800           .0480
    .400             .1730            .0020
    .550     .0000          -.0820
    .600                                             -.3010
    .700                              .0000
    .750     .0000          -.4360           .0000
    .800            -.4070
    .850                             -.4040
    .900                    -.1180                   -.3590
```

```
                                CAL T14-053 IA36 01 T1 S1  LOWER WING  POWER OFF           (LUF089)

MACH  ( 1) =     .901   BETA  ( 5) =    6.090

 SECTION ( 1)ORBITER WING              DEPENDENT VARIABLE CP

ETA          .2990   .4270   .5340   .6730   .7800   .8870

  X/C
    .950    .0000                   -.4090
```

```
DATE 05 NOV 75           TABULATED DATA FOR CAL T14-053 (IA36)                                                         PAGE  583

                                    CAL T14-053 IA36 O1 T1 S1  LOWER WING  POWER ON                    (LUF090)   ( 09 OCT 73  )

                REFERENCE DATA                                                                     PARAMETRIC DATA

SREF   =  2690.0000 SQ.FT.    XMRP   =    953.0000 IN.                                   BETA    =      .000   OPR     =    28.310
LREF   =  1328.0000 IN.       YMRP   =      .0000 IN.                                    SRMPR   =     2.020   GP1     =      .000
BREF   =  1328.0000 IN.       ZMRP   =    400.0000 IN.                                   GY1     =      .000   GP2     =      .000
SCALE  =      .0190 SCALE                                                                GY2     =    -3.500   GP3     =      .000
                                                                                         GY3     =     3.500   RUDDER  =      .000

MACH  ( 1) =      .899    ALPHA ( 1) =    -3.990

 SECTION ( 1)ORBITER WING                      DEPENDENT  VARIABLE CP

ETA            .2990    .4270    .5340    .6730    .7800    .8870

  X/C
   .050                                  -.4870            -.4640
   .400                  .0680           -.1330
   .550        .0000            -.1610
   .600                                                    -.3870
   .700                                   .0000
   .750        .0000            -.4740             .0000
   .800                 -.3740
   .850                                  -.4880
   .900                         -.0810                     -.0130
   .950        .0000                     -.1990
MACH  ( 1) =      .899    ALPHA ( 2) =      .100

 SECTION ( 1)ORBITER WING                      DEPENDENT  VARIABLE CP

ETA            .2990    .4270    .5340    .6730    .7800    .8870

  X/C
   .050                                   .0090            -.0460
   .400                  .1170           -.0540
   .550        .0000            -.1130
   .600                                                    -.3250
   .700                                   .0000
   .750        .0000            -.4270             .0000
   .800                 -.3780
   .850                                  -.4300
   .900                         -.0690                     -.2650
   .950        .0000                     -.2750
```

```
MACH  ( 1) =     .897   ALPHA ( 3) =    4.030

 SECTION ( 1)ORBITER WING                  DEPENDENT VARIABLE CP

ETA          .2990   .4270   .5340   .6730   .7800   .8870

  X/C
    .050                             .2430           .2140
    .400             .1450           .0260
    .550     .0000          -.0690
    .600                                            -.2460
    .700                             .0000
    .750     .0000          -.3910           .0000
    .800            -.3920
    .850                            -.3650
    .900                    -.1640                  -.4120
    .950     .0000                  -.4290

MACH  ( 1) =     .901   ALPHA ( 4) =    5.980

 SECTION ( 1)ORBITER WING                  DEPENDENT VARIABLE CP

ETA          .2990   .4270   .5340   .6730   .7800   .8870

  X/C
    .050                             .3220           .2960
    .400             .1510           .0640
    .550     .0000          -.0480
    .600                                            -.2060
    .700                             .0000
    .750     .0000          -.3700           .0000
    .800            -.4040
    .850                            -.3230
    .900                    -.2430                  -.4530
    .950     .0000                  -.4810
```

```
DATE 05 NOV 75               TABULATED DATA FOR CAL T14-053 (IA36)                                                    PAGE  565

                                       CAL T14-053 IA36 O1 T1 S1  LOWER WING  POWER ON                   (LUF091)   ( 09 OCT 73  )

               REFERENCE DATA                                                                    PARAMETRIC DATA

SREF  =  2690.0000 SQ.FT.   XMRP  =   953.0000 IN.                          ALPHA   =      .000   OPR     =    28.310
LREF  =  1328.0000 IN.      YMRP  =      .0000 IN.                          SRMPR   =     2.020   GP1     =      .000
BREF  =  1328.0000 IN.      ZMRP  =   400.0000 IN.                          GY1     =      .000   GP2     =      .000
SCALE =      .0190 SCALE                                                    GY2     =    -3.500   GP3     =      .000
                                                                            GY3     =     3.500   RUDDER  =      .000

MACH  ( 1) =     .897    BETA  ( 1) =   -6.060

 SECTION ( 1)ORBITER WING                    DEPENDENT VARIABLE CP

ETA          .2990    .4270    .5340    .6730    .7800    .8870

  X/C
    .050                               -.2160            -.2830
    .400             -.1260            -.1930
    .550     .0000            -.2490
    .600                                                 -.3920
    .700                                .0000
    .750     .0000            -.4040             .0000
    .800             -.3080
    .850                               -.4760
    .900                      -.1270                     -.0700
    .950     .0000                     -.2700
MACH  ( 1) =     .899    BETA  ( 2) =   -3.050

 SECTION ( 1)ORBITER WING                    DEPENDENT VARIABLE CP

ETA          .2990    .4270    .5340    .6730    .7800    .8870

  X/C
    .050                               -.0840            -.1940
    .400             -.0670            -.1460
    .550     .0000            -.2200
    .600                                                 -.3670
    .700                                .0000
    .750     .0000            -.4640             .0000
    .800             -.3460
    .850                               -.4860
    .300                      -.0800                     -.1880
    .950     .0000                     -.1940
```

```
                                  CAL T14-053 IA36 01 T1 S1  LOWER WING  POWER ON               (LUF091)

MACH  ( 1) =     .900    BETA  ( 3) =     .000

 SECTION ( 1)ORBITER WING                      DEPENDENT VARIABLE CP

ETA           .2990   .4270   .5340   .6730   .7800   .8870

 X/C
   .050                               .0140          -.0570
   .400               .1140          -.0630
   .550       .0000          -.1220
   .600                                              -.3340
   .700                               .0000
   .750       .0000          -.4460           .0000
   .800              -.3890
   .850                              -.4310
   .900                      -.0640                  -.2540
   .950       .0000                  -.2510
MACH  ( 1) =     .898    BETA  ( 4) =    3.050

 SECTION ( 1)ORBITER WING                      DEPENDENT VARIABLE CP

ETA           .2990   .4270   .5340   .6730   .7800   .8870

 X/C
   .050                               .1220           .0250
   .400               .1700           .0000
   .550       .0000          -.0760
   .600                                              -.3030
   .700                               .0000
   .750       .0000          -.4300           .0000
   .800              -.3800
   .850                              -.4080
   .900                      -.0780                  -.3000
   .950       .0000                  -.4210
MACH  ( 1) =     .900    BETA  ( 5) =    6.080

 SECTION ( 1)ORBITER WING                      DEPENDENT VARIABLE CP

ETA           .2990   .4270   .5340   .6730   .7800   8870

 X/C
   .050                               .2130           .0780
   .400               .2040           .0300
   .550       .0000          -.0470
   .600                                              -.2720
   .700                               .0000
   .750       .0000          -.4140           .0000
   .800              -.3900
   .850                              -.3880
   .900                      -.0960                  -.3360
```

```
DATE 05 NOV 75            TABULATED DATA FOR CAL T14-053 (IA36)                                                  PAGE  587

                                         CAL T14-053 IA36 01 T1 S1  LOWER WING  POWER ON             (LUF091)

MACH  ( 1) =     .900   BETA  ( 5) =    6.080

 SECTION ( 1)ORBITER WING                    DEPENDENT VARIABLE CP

ETA          .2990   .4270   .5340   .6730   .7800   .8870

  X/C
   .950      .0000                  -.3860
```

```
DATE 05 NOV 75          TABULATED DATA FOR CAL T14-053 (IA36)                                    PAGE  588
                                   CAL T14-053 IA36 01 T1 S1  LOWER WING  POWER ON          (LUF092)   ( 09 OCT 73  )

               REFERENCE DATA                                                             PARAMETRIC DATA

SPEF  =  2690.0000 SQ.FT.   XMRP  =   953.0000 IN.                        BETA   =      .000  OPR    =    70.500
LREF  =  1328.0000 IN.      YMRP  =      .0000 IN.                        SRMPR  =     2.020  GP1    =      .000
BREF  =  1328.0000 IN.      ZMRP  =   400.0000 IN.                        GY1    =      .000  GP2    =      .000
SCALE =      .0190 SCALE                                                  GY2    =    -3.500  GP3    =      .000
                                                                          GY3    =     3.500  RUDDER =      .000

MACH  ( 1) =     .900    ALPHA ( 1) =   -8.140

 SECTION ( 1)ORBITER WING                    DEPENDENT VARIABLE CP

ETA           .2990   .4270   .5340   .6730   .7800   .8870

  X/C
   .050                              -.6610          -.6540
   .400               .0140          -.1870
   .550       .0000          -.2020
   .600                                              -.4620
   .700                               .0000
   .750       .0000          -.4850           .0000
   .800              -.3870
   .850                              -.5180
   .900                      -.1120                  -.1200
   .950       .0000                  -.1320
MACH  ( 1) =     .899    ALPHA ( 2) =   -4.020

 SECTION ( 1)ORBITER WING                    DEPENDENT VARIABLE CP

ETA           .2990   .4270   .5340   .6730   .7800   .8870

  X/C
   .050                              -.4470          -.4690
   .400               .0850          -.1250
   .550       .0000          -.1470
   .600                                              -.3780
   .700                               .0000
   .750       .0000          -.4480           .0000
   .800              -.3510
   .850                              -.4700
   .900                      -.0820                  -.0030
   .950       .0000                  -.1920
```

```
DATE 05 NOV 75            TABULATED DATA FOR CAL T14-053 (IA36)                                                   PAGE  599

                                CAL T14-053 IA36 O1 T1 S1  LOWER WING  POWER ON                  (LUF092)
MACH  ( 1) =     .903   ALPHA ( 3) =     .020

 SECTION ( 1)ORBITER WING                           DEPENDENT VARIABLE CP

ETA           .2990   .4270   .5340   .6730   .7800   .8870

  X/C
   .050                               .0310           -.0580
   .400               .1190          -.0440
   .550       .0000          -.1010
   .600                                               -.3180
   .700                               .0000
   .750       .0000          -.4170           .0000
   .800              -.3610
   .850                              -.4170
   .900                      -.0570                   -.2500
   .950       .0000                  -.2700
MACH  ( 1) =     .900   ALPHA ( 4) =    4.020

 SECTION ( 1)ORBITER WING                           DEPENDENT VARIABLE CP

ETA           .2990   .4270   .5340   .6730   .7800   .8870

  X/C
   .050                               .2470            .2160
   .400               .1530           .0270
   .550       .0000          -.0660
   .600                                               -.2470
   .700                               .0000
   .750       .0000          -.3810           .0000
   .800              -.3890
   .850                              -.3580
   .900                      -.1520                   -.4070
   .950       .0000                  -.4330
MACH  ( 1) =     .898   ALPHA ( 5) =    6.010

 SECTION ( 1)ORBITER WING                           DEPENDENT VARIABLE CP

ETA           .2990   .4270   .5340   .6730   .7800   .8870

  X/C
   .050                               .3200            .3030
   .400               .1650           .0630
   .550       .0000          -.0510
   .600                                               -.2100
   .700                               .0000
   .750       .0000          -.3630           .0000
   .800              -.4060
   .850                              -.3310
   .900                      -.2320                   -.4690
```

```
                              CAL T14-053 IA36 01 T1 S1  LOWER WING  POWER ON            (LUF092)

MACH  ( 1) =     .898    ALPHA ( 5) =    6.010

 SECTION ( 1)ORBITER WING                       DEPENDENT VARIABLE CP

ETA           .2990    .4270    .5340    .6730    .7800    .8870

  X/C
    .950      .0000                     -.4860
```

```
DATE 05 NOV 75            TABULATED DATA FOR CAL T14-053 (IA36)                                                        PAGE  591

                                    CAL T14-053 IA36 C1 T1 S1  LOWER WING  POWER ON                  (LUF093)    ( 09 OCT 73  )

              REFERENCE DATA                                                                        PARAMETRIC DATA

SREF  =  2690.0000 SQ.FT.   XMRP  =   953.0000 IN.                                  BETA    =       .000   OPR     =     48.600
LREF  =  1328.0000 IN.      YMRP  =      .0000 IN.                                  SRMPR   =      2.020   GP1     =       .000
BREF  =  1328.0000 IN.      ZMRP  =   400.0000 IN.                                  GY1     =       .000   GP2     =       .000
SCALE =      .0190 SCALE                                                            GY2     =     -3.500   GP3     =       .000
                                                                                    GY3     =      3.500   RUDDER  =       .000

MACH  ( 1) =      .898    ALPHA ( 1) =    -8.100

 SECTION ( 1)ORBITER WING                      DEPENDENT VARIABLE CP

ETA           .2990   .4270   .5340   .6730   .7800   .8870

  X/C
   .050                              -.6800          -.6740
   .400               .0080          -.1980
   .550       .0000           -.2140
   .600                                              -.4980
   .700                               .0000
   .750       .0000           -.5140          .0000
   .800              -.4150
   .850                              -.5360
   .900                       -.1140                 -.1410
   .950       .0000                  -.1520

MACH  ( 1) =      .900    ALPHA ( 2) =    -3.990

 SECTION ( 1)ORBITER WING                      DEPENDENT VARIABLE CP

ETA           .2990   .4270   .5340   .6730   .7800   .8870

  X/C
   .050                              -.4440          -.4820
   .400               .0800          -.1290
   .550       .0000           -.1500
   .600                                              -.3830
   .700                               .0000
   .750       .0000           -.4650          .0000
   .800              -.3810
   .850                              -.4790
   .900                       -.0860                 -.0190
   .950       .0000                  -.1960
```

```
                                CAL T14-053 IA36 O1 T1 S1  LOWER WING  POWER ON            (LUF093)

MACH  ( 1) =     .899    ALPHA ( 3) =     .060

 SECTION ( 1)ORBITER WING                   DEPENDENT VARIABLE CP

ETA          .2990   .4270   .5340   .6730   .7800   .8870

 X/C
   .050                              .0220         -.0510
   .400              .1140          -.0550
   .550      .0000          -.1150
   .600                                             -.3350
   .700                              .0000
   .750      .0000          -.4400           .0000
   .800             -.3780
   .850                             -.4320
   .900                     -.0720                  -.2660
   .950      .0000                  -.2560
MACH  ( 1) =     .906    ALPHA ( 4) =    4.060

 SECTION ( 1)ORBITER WING                   DEPENDENT VARIABLE CP

ETA          .2990   .4270   .5340   .6730   .7800   .8870

 X/C
   .050                              .2530           .2230
   .400              .1540           .0370
   .550      .0000          -.0510
   .600                                             -.2320
   .700                              .0000
   .750      .0000          -.3730           .0000
   .800             -.3750
   .950                             -.3490
   .900                     -.1460                  -.3970
   .950      .0000                  -.4120
MACH  ( 1) =     .898    ALPHA ( 5) =    6.010

 SECTION ( 1)ORBITER WING                   DEPENDENT VARIABLE CP

ETA          .2990   .4270   .5340   .6730   .7800   .8870

 X/C
   .050                              .3110           .2970
   .400              .1550           .0520
   .550      .0000          -.0540
   .600                                             -.2180
   .700                              .0000
   .750      .0000          -.3820           .0000
   .800             -.4170
   .850                             -.3500
   .900                     -.2470                  -.4690
```

```
DATE 05 NOV 75            TABULATED DATA FOR CAL T14-053 (IA36)                                              PAGE  593
                                   CAL T14-053 IA36 01 T1 S1  LOWER WING  POWER ON               (LUF093)
MACH  ( 1) =     .838    ALPHA ( 5) =    6.010
 SECTION ( 1)ORBITER WING                    DEPENDENT VARIABLE CP
ETA          .2990   .4270   .5340   .6730   .7800   .8870
  X/C
    .950    .0000                   -.4340
```

```
DATE 05 NOV 75          TABULATED DATA FOR CAL T14-053 (IA36)                                         PAGE 594

                                        CAL T14-053 IA36 01 T1 S1  LOWER WING  POWER ON       (LUF094)   ( 09 OCT 73

                REFERENCE DATA                                                                  PARAMETRIC DATA

SREF  =  2690.0000 SQ.FT.   XMRP  =   953.0000 IN.                     BETA    =     .000  OPR     =    28.310
LREF  =  1328.0000 IN.      YMRP  =      .0000 IN.                     SRMPR   =    2.400  GP1     =      .000
BREF  =  1328.0000 IN.      ZMRP  =   400.0000 IN.                     GY1     =     .000  GP2     =      .000
SCALE =      .0190 SCALE                                               GY2     =   -3.500  GP3     =      .000
                                                                       GY3     =    3.500  RUDDER  =      .000

MACH  ( 1) =     .898    ALPHA ( 1) =   -7.970

 SECTION ( 1)ORBITER WING                DEPENDENT VARIABLE CP

ETA          .2990    .4270    .5340    .6730    .7800    .8870

  X/C
    .050                               -.6720            -.6580
    .400              .0220            -.1870
    .550     .0000            -.2020
    .600                                                 -.4450
    .700                                .0000
    .750     .0000            -.4840             .0000
    .800             -.3810
    .850                               -.5110
    .900                      -.0960                     -.1140
    .950     .0000                     -.1100
MACH  ( 1) =     .895    ALPHA ( 2) =   -3.980

 SECTION ( 1)ORBITER WING                DEPENDENT VARIABLE CP

ETA          .2990    .4270    .5340    .6730    .7800    .8870

  X/C
    .050                               -.3830            -.4630
    .400              .0910            -.1250
    .550     .0000            -.1480
    .600                                                 -.3800
    .700                                .0000
    .750     .0000            -.4490             .0000
    .800             -.3590
    .850                               -.4730
    .900                      -.0550                      .0020
    .950     .0000                     -.1760
```

```
                                   CAL T14-053 IA36 01 T1 S1  LOWER WING  POWER ON              (LUF094)
MACH  ( 1) =      .902    ALPHA   3) =      [illegible].00
 SECTION ( 1)ORBITER WING                         DEPENDENT VARIABLE CP
ETA           .2930   .4270   .5340   .6730    .7800   .8970
  X/C
   [illegible]                                  .0540             [illegible]
   [illegible]                .1290           - [illegible]
   [illegible]  .0000                 -.[illegible]
   [illegible]                                                  - [illegible]
   [illegible]                                  [illegible]
   [illegible]  .0000                 - [illegible]       [illegible]
   [illegible]              - .3290
   .8[illegible]                              - [illegible]
   [illegible]                        - [illegible]                [illegible]
   [illegible]  .0000                         - [illegible]
MACH  [illegible] =      .905    ALPHA   [illegible] =      - [illegible]
 SECTION ( 1)ORBITER WING                         DEPENDENT VARIABLE CP
ETA           .2[illegible]  .4270   [illegible]   [illegible]   [illegible]   [illegible]
  X/C
   [illegible]                                  [illegible]           [illegible]
   [illegible]                [illegible]
   [illegible]  .0000                 - .0340
   [illegible]                                                   -.2270
   [illegible]                                  [illegible]
   [illegible]  .0000                 -.3300              .7000
   [illegible]              -.3410
   [illegible]                                - [illegible]
   [illegible]                        -.1130                     -.3700
   [illegible]  .0000                         - [illegible]
MACH  ( 1) =      .598    ALPHA  ( 5) =      [illegible]
 SECTION ( 1)ORBITER WING                         DEPENDENT VARIABLE CP
ETA           .2930   .4270   .5340   .6730    .7800   .8970
  X/C
   .050                                         [illegible]            .3320
   .400                       .1710             [illegible]
   [illegible]  .0000                 - [illegible]
   .6[illegible]                                                   - .1830
   [illegible]                                  [illegible]
   [illegible]  .0000                 - [illegible]        .0000
   [illegible]              - .3050
   [illegible]                                - [illegible]
   [illegible]                        - [illegible]                 -.4470
```

```
                                          CAL T14-053 IA36 01 T1 S1  LOWER WING  POWER ON              (LUF094)

MACH  ( 1) =     .899   ALPHA ( 5) =    6.070

 SECTION ( 1)ORBITER WING                      DEPENDENT VARIABLE CP

ETA          .2990   .4270   .5340   .6730   .7800   .8870

  X/C
    .950    .0000                   -.4860
```

```
DATE 05 NOV 75              TABULATED DATA FOR CAL T14-053 (IA35)                                                   PAGE  597

                                   CAL T14-053 IA35 01 T1 S1  LOWER WING  POWER OFF                 (LUF035)   ( 09 OCT 73 )

             REFERENCE DATA                                                                          PARAMETRIC DATA

SREF  =  2690.0000 SQ.FT.   XMRP  =   903.0000 IN.                             BETA   =      .000   SP1    =      .000
LREF  =  1328.0000 IN.      YMRP  =      .0000 IN.                             GY1    =      .000   SP2    =      .000
BREF  =  1318.0000 IN.      ZMRP  =   400.0000 IN.                             GY2    =    -3.500   SP3    =      .000
SCALE =      .0100 SCALE                                                       GY3    =     3.500   RUDDER =    10.000

MACH  ( 1)  =    1.204    ALPHA ( 1) =  [illegible]

 SECTION ( 1)ORBITER WING                 DEPENDENT VARIABLE CP

ETA          .2910   .4270   .5340   .6730   .7840   .8670

  X/C
    [illegible]                        -.4580           -.3800
    [illegible]              .1060      .0050
    [illegible]    .0000            .0090
    .600                                                -.3100
                                       -.3810
    [illegible]    .0000           -.3010            .0000
    [illegible]             -.5020
    [illegible]                        -.4[illegible]
                                   -.5[illegible]                [illegible]
    [illegible]    .0000               -.5[illegible]

MACH  ( 1)  =    1.204    ALPHA ( 2) =  -4.040

 SECTION ( 1)ORBITER WING                 DEPENDENT VARIABLE CP

ETA          .2910   .4270   .5340   .6730   .7840   .8670

  X/C
    [illegible]                        -.3170           -.2440
    [illegible]              .1950      .09[illegible]
    [illegible]    .0000            .0630
    [illegible]                                         -.0790
                                       -.16[illegible]
    [illegible]    .0000           -.2470            .0000
    [illegible]             -.4620
    [illegible]                        -.3780
                                   -.5290                -.3880
    [illegible]    .0000               -.4040
```

REPRODUCIBILITY OF THE
ORIGINAL PAGE IS POOR

```
DATE 05 NOV 75              TABULATED DATA FOR CAL T14-053 (IA36)

                                  CAL T14-053 IA36 O1 T1 S1  LOWER WING  POWER OFF               (LUF095)

MACH  ( 1) =     1.207    ALPHA ( 3) =     -.020

 SECTION ( 1)ORBITER WING                       DEPENDENT VARIABLE CP

ETA           .2990   .4270   .5340   .6730   .7800   .8870

  X/C
   .050                               .0890           .1250
   .400               .2740           .1760
   .550       .0000           .1250
   .600                                               -.0320
   .700                              -.1110
   .750       .0000          -.1920           .0000
   .800              -.4310
   .850                              -.3380
   .900                      -.4930                   -.2840
   .950       .0000                  -.4590

MACH  ( 1) =     1.206    ALPHA ( 4) =     3.990

 SECTION ( 1)ORBITER WING                       DEPENDENT VARIABLE CP

ETA           .2990   .4270   .5340   .6730   .7800   .8870

  X/C
   .050                               .3780           .3850
   .400               .3240           .2650
   .550       .0000           .1820
   .600                                               .0300
   .700                              -.0520
   .750       .0000          -.1440           .0000
   .800              -.3930
   .850                              -.2920
   .900                      -.4530                   -.3140
   .950       .0000                  -.3240

MACH  ( 1) =     1.204    ALPHA ( 5) =     6.030

 SECTION ( 1)ORBITER WING                       DEPENDENT VARIABLE CP

ETA           .2990   .4270   .5340   .6730   .7800   .8870

  X/C
   .050                               .4630           .4720
   .400               .3230           .2870
   .550       .0000           .1880
   .600                                               .0550
   .700                              -.0390
   .750       .0000          -.1360           .0000
   .800              -.3850
   .850                              -.2780
   .900                      -.4430                   -.2980
```

```
                                            CAL T14-053 (IA36 01 T1 S1)  LOWER WING  POWER OFF            (LJF095)
MACH  ( 1) =     1.204    ALPHA ( 5) =    5.030
 SECTION ( 1)ORBITER WING                       DEPENDENT VARIABLE CP
ETA          .2990    .4270    .5340    .6730    .7800    .8370
  X/C
    950    .0000                     -.3510
```

```
DATE 05 NOV 75          TABULATED DATA FOR CAL T14-053 (IA36)                                         PAGE  600

                            CAL T14-053 IA36 01 T1 S1  LOWER WING  POWER OFF             (LUF096)    ( 09 OCT 73  )

                REFERENCE DATA                                                              PARAMETRIC DATA

SREF  =  2690.0000 SQ.FT.   XMRP  =   953.0000 IN.                          ALPHA  =       .000   GP1     =      .000
LREF  =  1328.0000 IN.      YMRP  =      .0000 IN.                          GY1    =       .000   GP2     =      .000
BREF  =  1328.0000 IN.      ZMRP  =   400.0000 IN.                          GY2    =     -3.500   GP3     =      .000
SCALE =      .0190 SCALE                                                    GY3    =      3.500   RUDDER  =    10.000

MACH  ( 1) =    1.202    BETA  ( 1) =   -6.080

 SECTION ( 1)ORBITER WING                     DEPENDENT VARIABLE CP

ETA          .2990   .4270   .5340   .6730   .7800   .8870

  X/C
    .050                             -.2400          -.1790
    .400             -.1750          -.1170
    .550     .0000           -.1760
    .600                                             -.1740
    .700                             -.2690
    .750     .0000           -.3460           .0000
    .800             -.3660
    .850                             -.4400
    .900                     -.4520                  -.4420
    .950     .0000                   -.5180

MACH  ( 1) =    1.206    BETA  ( 2) =   -3.050

 SECTION ( 1)ORBITER WING                     DEPENDENT VARIABLE CP

ETA          .2990   .4270   .5340   .6730   .7800   .8870

  X/C
    .050                             -.1890          -.1020
    .400             -.0470          -.0210
    .550     .0000           -.0520
    .600                                             -.1010
    .700                             -.1950
    .750     .0000           -.2630           .0000
    .800             -.4030
    .850                             -.3730
    .900                     -.4790                  -.3770
    .950     .0000                   -.4720
```

```
DATE 05 NOV 75          TABULATED DATA FOR CAL T14-053 (IA36)

                                 CAL T14-053 IA36 O1 T1 S1  LOWER WING  POWER OFF          (LUF096)

MACH  ( 1) =    1.205    BETA  ( 3) =      .000

 SECTION ( 1)ORBITER WING                          DEPENDENT VARIABLE CP

ETA           .2990   .4270   .5340   .6730   .7800   .8870

  X/C
    .050                                .1040           .1250
    .400             .2680              .1790
    .550     .0000            .1240
    .600                                               -.0310
    .700                               -.1120
    .750     .0000           -.1950           .0000
    .800            -.4330
    .850                               -.3330
    .900                     -.4940                     .0950
    .950     .0000                     -.4560

MACH  ( 1) =    1.205    BETA  ( 4) =     3.050

 SECTION ( 1)ORBITER WING                          DEPENDENT VARIABLE CP

ETA           .2990   .4270   .5340   .6730   .7800   .8870

  X/C
    .050                                .2430           .2040
    .400             .3340              .2200
    .550     .0000            .1640
    .600                                               -.0040
    .700                               -.0850
    .750     .0000           -.1640           .0000
    .800            -.3910
    .850                               -.3180
    .900                     -.4720                    -.2750
    .950     .0000                     -.4420

MACH  ( 1) =    1.204    BETA  ( 5) =     6.080

 SECTION ( 1)ORBITER WING                          DEPENDENT VARIABLE CP

ETA           .2990   .4270   .5340   .6730   .7800   .8870

  X/C
    .050                                .3240           .2520
    .400             .3820              .2640
    .550     .0000            .1970
    .600                                                .0220
    .700                               -.0610
    .750     .0000           -.1430           .0000
    .800            -.3710
    .850                               -.3020
    .900                     -.4500                    -.2970
```

```
DATE 05 NOV 75            TABULATED DATA FOR CAL T14-053 (IA36)
                                    CAL T14-053 IA36 01 T1 S1  LOWER WING  POWER OFF          (LUF096)

MACH  ( 1) =    1.204    BETA  ( 5) =    6.080

 SECTION ( 1)ORBITER WING                      DEPENDENT VARIABLE CP

ETA          .2990   .4270   .5340   .6730   .7800   .8870

  X/C
   .950      .0000                  -.3640
```

```
DATE 05 NOV 75           TABULATED DATA FOR CAL T14-053 (IA36)                                                    PAGE  603

                                       CAL T14-053 IA36 O1 T1 S1  LOWER WING  POWER ON                 (LUF097)   ( 09 OCT 73  )

              REFERENCE DATA                                                                     PARAMETRIC DATA

SREF  =  2690.0000 SQ.FT.   XMRP  =   953.0000 IN.                                    BETA    =       .000  OPR     =     36.200
LREF  =  1328.0000 IN.      YMRP  =      .0000 IN.                                    SRMPR   =      2.330  GP1     =       .000
BREF  =  1328.0000 IN.      ZMRP  =   400.0000 IN.                                    GY1     =       .000  GP2     =       .000
SCALE =      .0190 SCALE                                                              GY2     =     -3.500  GP3     =       .000
                                                                                      GY3     =      3.500  RUDDER  =     10.000

MACH  ( 1) =    1.188    ALPHA ( 1) =   -7.790

 SECTION ( 1)ORBITER WING                   DEPENDENT VARIABLE CP

ETA         .2990   .4270   .5340   .6730   .7800   .8870

  X/C
    .050                           -.4870          -.3920
    .400             .1190          .0180
    .550    .0000           .0160
    .600                                           -.2960
    .700                           -.2330
    .750    .0000          -.3060           .0000
    .800            -.4510
    .850                           -.4360
    .900                   -.5800                  -.3950
    .950    .0000                  -.5500

MACH  ( 1) =    1.205    ALPHA ( 2) =   -4.020

 SECTION ( 1)ORBITER WING                   DEPENDENT VARIABLE CP

ETA         .2990   .4270   .5340   .6730   .7800   .8870

  X/C
    .050                           -.3110          -.2140
    .400             .2330          .1220
    .550    .0000           .0900
    .600                                           -.0590
    .700                           -.1460
    .750    .0000          -.2230           .0000
    .800            -.4250
    .850                           -.3640
    .900                   -.5230                  -.3700
    .950    .0000                  -.4830
```

```
                                   CAL T14-053 IA36 01 T1 S1  LOWER WING  POWER ON          (LUF097)

MACH  ( 1) =    1.187    ALPHA ( 3) =    4.060

 SECTION ( 1)ORBITER WING                  DEPENDENT VARIABLE CP

ETA          .2990   .4270   .5340   .6730   .7800   .8870

  X/C
    .050                             .3750           .3990
    .400             .3290           .2600
    .550     .0000           .1860
    .600                                             .0260
    .700                            -.0640
    .750     .0000          -.1490           .0000
    .800            -.4020
    .850                            -.3080
    .900                    -.4810                  -.3270
    .950     .0000                  -.3430

MACH  ( 1) =    1.192    ALPHA ( 4) =    6.010

 SECTION ( 1)ORBITER WING                  DEPENDENT VARIABLE CP

ETA          .2990   .4270   .5340   .6730   .7800   .8870

  X/C
    .050                             .4600           .4940
    .400             .3470           .2980
    .550     .0000           .2070
    .600                                             .0690
    .700                            -.0390
    .750     .0000          -.1240           .0000
    .800            -.3770
    .850                            -.2790
    .900                    -.4580                  -.2940
    .950     .0000                  -.3390
```

```
                                    CAL T14-053 IA36 O1 T1 S1  LOWER WING  POWER ON               (LUF098)   ( 09 OCT 73  )

            REFERENCE DATA                                                                    PARAMETRIC DATA

SREF  =  2690.0000 SQ.FT     XMRP  =   953.0000 IN.                       ALPHA  =      .000   OPR     =    36.200
LREF  =  1328.0000 IN.       YMRP  =      .0000 IN.                       SRMPR  =     2.330   GP1     =      .000
BREF  =  1328.0000 IN.       ZMRP  =   400.0000 IN.                       GY1    =      .000   GP2     =      .000
SCALE =      .0190 SCALE                                                  GY2    =    -3.500   GP3     =      .000
                                                                          GY3    =     3.500   RUDDER  =    10.000

MACH  ( 1) =    1.195    BETA  ( 1) =   -6.070

 SECTION ( 1)ORBITER WING                      DEPENDENT VARIABLE CP

ETA          .2990   .4270   .5340   .6730   .7800   .8870

  X/C
    .050                             -.1950          -.1630
    .400             -.1590          -.1020
    .550     .0000           -.1600
    .600                                             -.1650
    .700                             -.2550
    .750     .0000           -.3270           .0000
    .800             -.2980
    .850                             -.4170
    .900                     -.3860                  -.4400
    .950     .0000                   -.4880
MACH  ( 1) =    1.207    BETA  ( 2) =   -3.050

 SECTION ( 1)ORBITER WING                      DEPENDENT VARIABLE CP

ETA          .2990   .4270   .5340   .6730   .7800   .8870

  X/C
    .050                             -.0730          -.0750
    .400             -.0140           .0050
    .550     .0000           -.0450
    .600                                             -.0860
    .700                             -.1750
    .750     .0000           -.2420           .0000
    .800             -.3550
    .850                             -.3560
    .900                     -.4500                  -.3400
    .950     .0000                   -.4520
```

```
                                           CAL T14-053 IA36 01 T1 S1  LOWER WING  POWER ON              (LUF098)

MACH  ( 1) =    1.204    BETA  ( 3) =     .000

 SECTION ( 1)ORBITER WING                           DEFENDENT VARIABLE CP

ETA            .2990   .4270   .5340   .6730   .7800   .8870

  X/C
    .050                                .1340           .1710
    .400                .3010           .2030
    .550       .0000            .1520
    .600                                               -.0070
    .700                               -.0930
    .750       .0000           -.1720           .0000
    .800               -.4110
    .850                               -.3240
    .900                       -.4920                  -.2780
    .950       .0000                   -.4490
MACH  ( 1) =    1.204    BETA  ( 4) =    3.050

 SECTION ( 1)ORBITER WING                           DEPENDENT VARIABLE CP

ETA            .2990   .4270   .5340   .6730   .7800   .8870

  X/C
    .050                                .2600           .2440
    .400                .3770           .2420
    .550       .0000            .1950
    .600                                                .0200
    .700                               -.0690
    .750       .0000           -.1420           .0000
    .800               -.3570
    .850                               -.3040
    .900                       -.4710                  -.2680
    .950       .0000                   -.4330
MACH  ( 1) =    1.205    BETA  ( 5) =    6.080

 SECTION ( 1)ORBITER WING                           DEPENDENT VARIABLE CP

ETA            .2990   .4270   .5340   .6730   .7800   .8870

  X/C
    .050                                .3450           .2860
    .400                .4170           .2870
    .550       .0000            .2290
    .600                                                .0480
    .700                               -.0430
    .750       .0000           -.1210           .0000
    .800               -.3470
    .850                               -.2900
    .900                       -.4530                  -.2790
```

```
                                      CAL T14-053 IA36 01 T1 S1  LOWER WING  POWER ON                (LUF098)
MACH  ( 1) =    1.205    BETA  ( 5) =    5.080
 SECTION ( 1)ORBITER WING                    DEPENDENT VARIABLE CP
ETA          .2990   .4270   .5340   .6730   .7800   .8870
  X/C
    .950     .0000                  -.3260
```

```
DATE 05 NOV 75          TABULATED DATA FOR CAL T14-053 (IA36)

                                CAL T14-053 IA36 01 T1 S1  LOWER WING  POWER ON           (LUF099)   ( 09 OCT 73  )

                REFERENCE DATA                                                                  PARAMETRIC DATA

SREF   =  2630.0000 SQ.FT.   XMRP  =   953.0000 IN.                          ALPHA   =      .000   OPR     =    97.600
LREF   =  1328.0000 IN.      YMRP  =      .0000 IN.                          SRMPR   =     2.330   GP1     =      .000
BREF   =  1328.0000 IN.      ZMRP  =   400.0000 IN.                          GY1     =      .000   GP2     =      .000
SCALE  =      .0190 SCALE                                                    GY2     =    -3.500   GP3     =      .000
                                                                             GY3     =     3.500   RUDDER  =    10.000

MACH  ( 1) =    1.203    BETA  ( 1) =   -6.080

 SECTION ( 1)ORBITER WING                     DEPENDENT VARIABLE CP

ETA          .2990   .4270   .5340   .6730   .7800   .8870

  X/C
    .050                             -.1540          -.1440
    .400             -.1380          -.0890
    .550     .0000           -.1390
    .600                                             -.1430
    .700                             -.2400
    .750     .0000           -.2770           .0000
    .900             -.2240
    .850                             -.3890
    .900                     -.2800                  -.4180
    .950     .0000                   -.4480
MACH  ( 1) =    1.203    BETA  ( 2) =   -3.050

 SECTION ( 1)ORBITER WING                     DEPENDENT VARIABLE CP

ETA          .2990   .4270   .5340   .6730   .7800   .8870

  X/C
    .050                             -.1550          -.0830
    .400             -.0380          -.0130
    .550     .0000           -.0590
    .600                                             -.0940
    .700                             -.1920
    .750     .0000           -.2520           .0000
    .900             -.3180
    .850                             -.3720
    .900                     -.4460                  -.3560
    .950     .0000                   -.4630
```

```
                                      CAL T14-053 IA36 01 T' S1  LOWER WING  POWER ON              (LUF099)
MACH  ( 1) =     1.061    BETA  ( 3) =      .000
 SECTION ( 1)ORBITER WING                    DEPENDENT VARIABLE CP
ETA            .2990   .4270   .5340   .6730   .7800   .8870
  X/C
   .050                                 .0000           .0130
   .400                 .1720           .0760
   .550        .0000           .0080
   .600                                                -.1470
   .700                                -.2440
   .750        .0000          -.3270           .0000
   .800                -.4870
   .850                                -.4910
   .900                       -.5870                   -.4260
   .950        .0000                   -.5820
MACH  ( 1) =     1.118    BETA  ( 4) =     2.980
 SECTION ( 1)ORBITER WING                    DEPENDENT VARIABLE CP
ETA            .2990   .4270   .5340   .6730   .7800   .8870
  X/C
   .050                                -.0510           .0300
   .400                 .1900           .1080
   .550        .0000           .0510
   .600                                                -.0950
   .700                                -.1980
   .750        .0000          -.2630           .0000
   .800                -.4550
   .850                                -.4350
   .900                       -.5950                   -.3300
   .950        .0000                   -.5470
MACH  ( 1) =     1.199    BETA  ( 5) =     6.080
 SECTION ( 1)ORBITER WING                    DEPENDENT VARIABLE CP
ETA            .2990   .4270   .5340   .6730   .7800   .8870
  X/C
   .050                                 .3460           .2900
   .400                 .4220           .2860
   .550        .0000           .2290
   .600                                                 .0460
   .700                                -.0470
   .750        .0000          -.1230           .0000
   .800                -.3340
   .850                                -.2910
   .900                       -.4510                   -.2880
```

REPRODUCIBILITY OF THE
ORIGINAL PAGE IS POOR

```
DATE 05 NOV 75           TABULATED DATA FOR CAL T14-053 (IA36)
                                    CAL T14-053 IA36 01 T1 S1  LOWER WING  POWER ON              (LUF099)

MACH  ( 1) =    1.199    BETA  ( 5) =     6.080

 SECTION ( 1)ORBITER WING                    DEPENDENT VARIABLE CP

ETA           .2990   .4270   .5340   .6730   .7800   .8870

  X/C
   .950    .0000                   -.3610
```

```
                                                                                                        PAGE  611
DATE 05 NOV 75          TABULATED DATA FOR CAL T14-053 (IA36)                                (LUF100)   ( 09 OCT 73  )
                                 CAL T14-053 IA36 O1 T1 S1  LOWER WING  POWER OFF
                                                                                          PARAMETRIC DATA
                 REFERENCE DATA
                                                                                BETA    =      .000   GP1     =      .000
SREF  =  2690.0000 SQ.FT.   XMRP  =   953.0000 IN.                               GY1     =      .000   GP2     =      .000
LREF  =  1328.0000 IN.      YMRP  =      .0000 IN.                               GY2     =    -3.500   GP3     =      .000
BREF  =  1328.0000 IN.      ZMRP  =   400.0000 IN.                               GY3     =     3.500   RUDDER  =    10.000
SCALE =      .0190 SCALE

MACH  ( 1) =     .902    ALPHA ( 1) =   -8.100

 SECTION ( 1)ORBITER WING                     DEPENDENT VARIABLE CP

ETA           .2990    .4270    .5340    .6730    .7800    .8870

  X/C
   .050                                  -.6970            -.6800
   .400                -.0150            -.2160
   .550       .0000             -.2500
   .600                                                     -.5190
   .700                                  -.5410
   .750       .0000             -.5240             .0000
   .800                -.4340
   .850                                  -.1540
   .900                         -.1180                      -.1520
   .950       .0000                      -.0530

MACH  ( 1) =     .907    ALPHA ( 2) =   -4.040

 SECTION ( 1)ORBITER WING                     DEPENDENT VARIABLE CP

ETA           .2990    .4270    .5340    .6730    .7800    .8870

  X/C
   .050                                  -.4590            -.5070
   .400                 .0580            -.1490
   .550       .0000             -.1790
   .600                                                     -.4130
   .700                                  -.4950
   .750       .0000             -.4880             .0000
   .800                -.3910
   .850                                  -.2070
   .900                         -.1010                      -.0610
   .950       .0000                      -.0250
```

```
                                           CAL T14-053 IA36 01 T1 S1  LOWER WING  POWER OFF              (LUF100)

MACH  ( 1) =      .899    ALPHA ( 3) =      .020

 SECTION ( 1)ORBITER WING                         DEPENDENT VARIABLE CP

ETA           .2990   .4270   .5340   .6730   .7800   .0970

  X/C
   .050                               -.0030          -.1100
   .400               .0820           -.0830
   .550       .0000           -.1560
   .600                                               -.3550
   .700                               -.4440
   .750       .0000           -.4620          .0000
   .800              -.4030
   .850                               -.3060
   .900                       -.0880                  -.3000
   .950       .0000                   -.0480

MACH  ( 1) =      .903    ALPHA ( 4) =     3.980

 SECTION ( 1)ORBITER WING                         DEPENDENT VARIABLE CP

ETA           .2990   .4270   .5340   .6730   .7800   .8870

  X/C
   .050                                .2190           .1760
   .400               .1350            .0100
   .550       .0000           -.0930
   .600                                               -.2690
   .700                               -.3730
   .750       .0000           -.4030          .0000
   .800              -.3920
   .850                               -.4340
   .900                       -.1670                  -.4340
   .950       .0000                   -.2250

MACH  ( 1) =      .900    ALPHA ( 5) =     6.010

 SECTION ( 1)ORBITER WING                         DEPENDENT VARIABLE CP

ETA           .2990   .4270   .5340   .6730   .7800   .8870

  X/C
   .050                                .2820           .2590
   .400               .1380            .0340
   .550       .0000           -.2900
   .600                                               -.2480
   .700                               -.3570
   .750       .0000           -.4010          .0000
   .800              -.4220
   .850                               -.4990
   .900                       -.2360                  -.4720
```

```
                                     CAL T14-053 IA36 01 T1 S1  LOWER WING  POWER OFF            (LUF100)

MACH  ( 1) =     .900   ALPHA ( 5) =    6.010

 SECTION ( 1)ORBITER WING                 DEPENDENT VARIABLE CP

ETA          .2990   .4270   .5340   .6730   .7800   .8870

  X/C
    .950    .0000                   -.3360
```

```
DATE 05 NOV 75           TABULATED DATA FOR CAL T14-053 (IA36)

                                CAL T14-053 IA36 01 T1 S1  LOWER WING  POWER OFF              (LUF101)   ( 09 OCT 73 )

               REFERENCE DATA                                                                       PARAMETRIC DATA

SREF  =  2690.0000 SQ.FT.   XMRP  =   953.0000 IN.                               ALPHA   =     .000   GP1     =     .000
LREF  =  1328.0000 IN.      YMRP  =      .0000 IN.                               GY1     =     .000   GP2     =     .000
BREF  =  1328.0000 IN.      ZMRP  =   400.0000 IN.                               GY2     =   -3.500   GP3     =     .000
SCALE =      .0190 SCALE                                                         GY3     =    3.500   RUDDER  =   10.000

MACH  ( 1) =     .900   BETA  ( 1) =   -6.080

 SECTION ( 1)ORBITER WING                      DEPENDENT VARIABLE CP

ETA            .2990   .4270   .5340   .6730   .7800   .8870

  X/C
    .050                              -.2180          -.3210
    .400              -.1420          -.2090
    .550       .0000          -.2770
    .600                                              -.4170
    .700                              -.4730
    .750       .0000          -.4290           .0000
    .800              -.3150
    .850                              -.2790
    .900                      -.1280                  -.1120
    .950       .0000                   .0020

MACH  ( 1) =     .901   BETA  ( 2) =   -3.050

 SECTION ( 1)ORBITER WING                      DEPENDENT VARIABLE CP

ETA            .2990   .4270   .5340   .6730   .7800   .8870

  X/C
    .050                              -.1080          -.2270
    .400              -.0930          -.1630
    .550       .0000          -.2480
    .600                                              -.3910
    .700                              -.4910
    .750       .0000          -.4690           .0000
    .800              -.3500
    .850                              -.2220
    .900                      -.0990                  -.2380
    .950       .0000                   .0140
```

```
DATE 05 NOV 75            TABULATED DATA FOR CAL T14-053 (IA36)
                                    CAL T14-053 IA36 01 T1 S1  LOWER WING  POWER OFF              (LUF101)

MACH  ( 1) =     .903    BETA  ( 3) =      .000

 SECTION ( 1)ORBITER WING                        DEPENDENT VARIABLE CP

ETA           .2990   .4270   .5340   .6730   .7800   .8870

  X/C
    .050                               -.0030          -.1000
    .400              .0870            -.0760
    .550      .0000           -.1460
    .600                                               -.3560
    .700                               -.4390
    .750      .0000           -.4630           .0000
    .800             -.3910
    .850                               -.2950
    .900                      -.0800                   -.2900
    .950      .0000                     .0330
MACH  ( 1) =     .902    BETA  ( 4) =     3.050

 SECTION ( 1)ORBITER WING                        DEPENDENT VARIABLE CP

ETA           .2990   .4270   .5340   .6730   .7800   .8870

  X/C
    .050                                .1110          -.0140
    .400              .1490            -.0310
    .550      .0000           -.1020
    .600                                               -.3220
    .700                               -.4150
    .750      .0000           -.4400           .0000
    .800             -.3830
    .850                               -.4310
    .900                      -.0890                   -.3210
    .950      .0000                     .0400
MACH  ( 1) =     .903    BETA  ( 5) =     6.090

 SECTION ( 1)ORBITER WING                        DEPENDENT VARIABLE CP

ETA           .2990   .4270   .5340   .6730   .7800   .8870

  X/C
    .050                                .1860           .0390
    .400              .1820             .0060
    .550      .0000           -.0790
    .600                                               -.2940
    .700                               -.4030
    .750      .0000           -.4350           .0000
    .800             -.4040
    .850                               -.4050
    .900                      -.1120                   -.3660
```

```
DATE 05 NOV 75            TABULATED DATA FOR CAL T14-053 (IA36)
                                    CAL T14-053 IA36 01 T1 S1  LOWER WING  POWER OFF              (LUF101)

MACH  ( 1) =     .903   BETA  ( 5) =    6.090

 SECTION ( 1)ORBITER WING                    DEPENDENT VARIABLE CP

ETA          .2990   .4270   .5340   .6730   .7800   .8870

  X/C
   .950     .0000                  -.0670
```

```
DATE 05 NOV 75              TABULATED DATA FOR CAL T14-053 (IA36)                                                    PAGE  617

                                    CAL T14-053 IA36 01 T1 S1  LOWER WING  POWER ON              (LUF102)    ( 09 OCT 73  )

               REFERENCE DATA                                                                PARAMETRIC DATA

SREF  =  2690.0000 SQ.FT.   XMRP  =   953.0000 IN.                            BETA    =      .000   OPR    =    28.310
LREF  =  1328.0000 IN.      YMRP  =      .0000 IN.                            SRMPR   =     2.020   GP1    =      .000
BREF  =  1328.0000 IN.      ZMRP  =   400.0000 IN.                            GY1     =      .000   GP2    =      .000
SCALE =      .0190 SCALE                                                      GY2     =    -3.500   GP3    =      .000
                                                                              GY3     =     3.500   RUDDER =    10.000

MACH  ( 1) =      .899    ALPHA ( 1) =    -7.860

 SECTION ( 1)ORBITER WING                      DEPENDENT VARIABLE CP

ETA          .2990     .4270     .5340     .6730     .7800     .8870

  X/C
    .050                                  -.6790              -.6580
    .400                .0220             -.1960
    .550     .0000              -.2140
    .600                                                      -.4560
    .700                                  -.5220
    .750     .0000              -.5080              .0000
    .800               -.4020
    .850                                  -.1480
    .900                        -.1110                        -.1140
    .950     .0000                         .0040
MACH  ( 1) =      .901    ALPHA ( 2) =    -4.040

 SECTION ( 1)ORBITER WING                      DEPENDENT VARIABLE CP

ETA          .2990     .4270     .5340     .6730     .7800     .8870

  X/C
    .050                                  -.4380              -.4990
    .400                .0820             -.1300
    .550     .0000              -.1630
    .600                                                      -.3950
    .700                                  -.4870
    .750     .0000              -.4800              .0000
    .800               -.3900
    .850                                  -.2010
    .900                        -.0840                        -.0210
    .950     .0000                         .0320
```

```
                              CAL T14-053 IA36 01 T1 S1  LOWER WING  POWER ON             (LUF102)

MACH  ( 1) =     .901    ALPHA ( 3) =     -.030

 SECTION ( 1)ORBITER WING                DEPENDENT VARIABLE CP

ETA          .2990   .4270   .5340   .6730   .7800   .8870

 X/C
   .050                                .0120            -.0750
   .400                .1090          -.0510
   .550      .0000           -.1240
   .600                                                 -.3360
   .700                               -.4340
   .750      .0000           -.4570            .0000
   .800               -.3960
   .850                               -.2750
   .900                      -.0660                     -.2710
   .950      .0000                     .0500
MACH  ( 1) =     .904    ALPHA ( 4) =      4.110

 SECTION ( 1)ORBITER WING                DEPENDENT VARIABLE CP

ETA          .2990   .4270   .5340   .6730   .7800   .8870

 X/C
   .050                                .2470             .2040
   .400                .1580           .0320
   .550      .0000           -.0770
   .600                                                 -.2510
   .700                               -.3620
   .750      .0000           -.3940            .0000
   .800               -.4120
   .850                               -.4380
   .900                      -.1540                     -.4170
   .950      .0000                    -.1620
MACH  ( 1) =     .920    ALPHA ( 5) =      6.080

 SECTION ( 1)ORBITER WING                DEPENDENT VARIABLE CP

ETA          .2990   .4270   .5340   .6730   .7800   .8870

 X/C
   .050                                .3540             .3450
   .400                .2000           .1100
   .550      .0000           -.0060
   .600                                                 -.1600
   .700                               -.2760
   .750      .0000           -.3250            .0000
   .800               -.3580
   .850                               -.4440
   .900                      -.2020                     -.3970
```

```
DATE 05 NOV 75              TABULATED DATA FOR CAL T14-053 (IA36)
                                                                                          PAGE  619
                                  CAL T14-053 IA36 01 T1 S1  LOWER WING  POWER ON
MACH  ( 1) =     .920    ALPHA ( 5) =    6.080                                    (LUF102)
 SECTION ( 1)ORBITER WING                 DEPENDENT VARIABLE CP
ETA           .2990   .4270   .5340   .6730   .7800   .8870
  X/C
   .950     .0000                    -.1900
```

```
                                   CAL T14-053 IA36 O1 T1 S1  LOWER WING  POWER ON            (LUF103)   ( 09 OCT 73  )

              REFERENCE DATA                                                                    PARAMETRIC DATA

SREF  =  2690.0000 SQ.FT.   XMRP  =   953.0000 IN.                             ALPHA   =      .000   OPR     =    28.310
LREF  =  1328.0000 IN.      YMRP  =      .0000 IN.                             SRMPR   =     2.020   GP1     =      .000
BREF  =  1328.0000 IN.      ZMRP  =   400.0000 IN.                             GY1     =      .000   GP2     =      .000
SCALE =      .0190 SCALE                                                       GY2     =    -3.500   GP3     =      .000
                                                                               GY3     =     3.500   RUDDER  =    10.000

MACH  ( 1) =     .904   BETA  ( 1) =   -6.090

 SECTION ( 1)ORBITER WING                       DEPENDENT VARIABLE CP

ETA          .2990    .4270    .5340    .6730    .7800    .8870

  X/C
   .050                                 -.1870            -.2840
   .400              -.1070             -.1740
   .550      .0000            -.2420
   .600                                                   -.3780
   .700                                 -.4480
   .750      .0000            -.4110              .0000
   .800              -.2940
   .850                                 -.2750
   .900                       -.1090                      -.0740
   .950      .0000                       .0400

MACH  ( 1) =     .896   BETA  ( 2) =   -3.050

 SECTION ( 1)ORBITER WING                       DEPENDENT VARIABLE CP

ETA          .2990    .4270    .5340    .6730    .7800    .8870

  X/C
   .050                                 -.0960            -.2070
   .400              -.0740             -.1570
   .550      .0000            -.2410
   .600                                                   -.3900
   .700                                 -.4980
   .750      .0000            -.4910              .0000
   .800              -.3850
   .850                                 -.2150
   .900                       -.0950                      -.2810
   .950      .0000                       .0230
```

CAL T14-053 IA36 01 T1 S1 LOWER WING POWER ON (LUF103)

MACH (1) = .907 BETA (3) = .000

SECTION (1)ORBITER WING DEPENDENT VARIABLE CP

ETA	2990	.4270	.5340	.6730	.7800	.8870
X/C						
.050				.0400		-.0370
.400		.1330		-.0420		
.550	.0000		-.1040			
.600						-.3110
.700				-.4140		
.750	.0000		-.4300		.0000	
.800		-.3700				
.850				-.2960		
.900			-.0580			-.2540
.950	.0000			.0680		

MACH (1) = .901 BETA (4) = 3.060

SECTION (1)ORBITER WING DEPENDENT VARIABLE CP

ETA	.2990	.4270	.5340	.6730	.7800	.8870
X/C						
.050				.1450		.0230
.400		.1770		-.0100		
.550	.0000		-.0770			
.600						-.2990
.700				-.4120		
.750	.0000		-.4330		.0000	
.800		-.3940				
.850				-.4610		
.900			-.0870			-.3160
.950	.0000			.0170		

MACH (1) = .896 BETA (5) = 6.090

SECTION (1)ORBITER WING DEPENDENT VARIABLE CP

ETA	.2990	.4270	.5340	.6730	.7800	.8870
X/C						
.050				.2050		.0670
.400		.2030		.0190		
.550	.0000		-.0590			
.600						-.2730
.700				-.3940		
.750	.0000		-.4330		.0000	
.800		-.4070				
.850				-.4000		
.900			-.1100			-.3500

```
DATE 05 NOV 75            TABULATED DATA FOR CAL T14-053 (IA36)                                          PAGE 622

                                    CAL T14-053 IA36 01 T1 S1  LOWER WING  POWER ON                (LUF103)

MACH  ( 1) =     .896   BETA  ( 5) =    6.090

 SECTION ( 1)ORBITER WING                        DEPENDENT VARIABLE CP

ETA          .2990   .4270   .5340   .6730   .7800   .8870

  X/C
   .950    .0000                  -.0520
```

```
DATE 05 NOV 75              TABULATED DATA FOR CAL T14-053 (IA36)                                                PAGE  623
                                          CAL T14-053 IA36 O1 T1 S1  LOWER WING  POWER ON               (LUF104)   ( 09 OCT 73  )

                REFERENCE DATA                                                                           PARAMETRIC DATA

SREF  =  2690.0000 SQ.FT.   XMRP  =   953.0000 IN.                                     ALPHA   =      .000   CPR     =    69.300
LREF  =  1328.0000 IN.      YMRP  =      .0000 IN.                                     DRMPR   =     2.020   GP1     =      .000
BREF  =  1328.0000 IN.      ZMRP  =   400.0000 IN.                                     GY1     =      .000   GP2     =      .000
SCALE =       .0190 SCALE                                                              GY2     =    -3.500   GP3     =      .000
                                                                                       GY3     =     3.500   RUDDER  =    10.000

MACH  ( 1) =      .898    BETA  ( 1) =    -6.090

 SECTION ( 1)ORBITER WING                      DEPENDENT VARIABLE CP

ETA          .2990   .4270   .5340   .6730   .7800   .8870

  X/C
    .050                             -.2230          -.3000
    .400             -.1220          -.1890
    .550     .0000           -.2500
    .600                                             -.3960
    .700                             -.4690
    .750     .0000           -.4150          .0000
    .800             -.3160
    .850                             -.3200
    .900                     -.1280                  -.0900
    .950     .0000                    .0170
MACH  ( 1) =      .898    BETA  ( 2) =    -3.050

 SECTION ( 1)ORBITER WING                      DEPENDENT VARIABLE CP

ETA          .2990   .4270   .5340   .6730   .7800   .8870

  X/C
    .050                             -.0780          -.1910
    .400             -.0710          -.1510
    .550     .0000           -.2250
    .600                                             -.3730
    .700                             -.4940
    .750     .0000           -.4730          .0000
    .800             -.3630
    .850                             -.2390
    .900                     -.1020                  -.2710
    .950     .0000                    .0140
```

```
                                  CAL T14-053 IA35 01 T1 S1  LOWER WING  POWER ON              (LUF104)

MACH  ( 1) =     .899   BETA  ( 3) =     .000

 SECTION ( 1)ORBITER WING                      DEPENDENT VARIABLE CP

ETA          .2990   .4270   .5340   .6730   .7800   .8870

  X/C
    .050                             .0140           -.0580
    .400             .1250          -.0540
    .550     .0000          -.1100
    .600                                             -.3210
    .700                            -.4290
    .750     .0000          -.4360           .0000
    .800            -.3810
    .850                            -.2760
    .900                    -.0750                   -.2670
    .950     .0000                   .0640

MACH  ( 1) =     .900   BETA  ( 4) =    3.060

 SECTION ( 1)ORBITER WING                      DEPENDENT VARIABLE CP

ETA          .2990   .4270   .5340   .6730   .7800   .8870

  X/C
    .050                             .1540            .0300
    .400             .1890          -.0020
    .550     .0000          -.0690
    .600                                             -.2910
    .700                            -.3990
    .750     .0000          -.4200           .0000
    .800            -.3790
    .850                            -.4340
    .900                    -.0730                   -.3140
    .950     .0000                   .0410

MACH  ( 1) =     .896   BETA  ( 5) =    6.090

 SECTION ( 1)ORBITER WING                      DEPENDENT VARIABLE CP

ETA          .2990   .4270   .5340   .6730   .7800   .8870

  X/C
    .050                             .2120            .0820
    .400             .2130           .0250
    .550     .0000          -.0510
    .600                                             -.2670
    .700                            -.3940
    .750     .0000          -.4240           .0000
    .800            -.3900
    .850                            -.4030
    .900                    -.1140                   -.3590
```

```
DATE 05 NOV 75             TABULATED DATA FOR CAL T14-053 (IA36)                                                      PAGE  625
                                     CAL T14-053 IA35 01 T1 S1  LOWER WING  POWER ON                 (LUF104)

MACH  ( 1) =     .896   BETA  ( 5) =    6.090

 SECTION ( 1)ORBITER WING                     DEPENDENT VARIABLE CP

ETA           .2990   .4270   .5340   .6730   .7800   .8870

  X/C
    .950     0000                    -.0440
```

```
DATE 05 NOV 75          TABULATED DATA FOR CAL T14-053 (IA36)                                                      PAGE 535

                                            CAL T14-053 IA36 01 T1 S1  LOWER WING  POWER ON              (LUF105)   ( 09 OCT 73

                 REFERENCE DATA                                                                         PARAMETRIC DATA

SREF  =  2690.0000 SQ.FT.   XMRP  =   953.0000 IN.                                     ALPHA   =      .000   OPR     =    97.[illegible]
LREF  =  1328.0000 IN.      YMRP  =      .0000 IN.                                     SRMPR   =     2.330   GP1     =      [illegible]
BREF  =  1328.0000 IN.      ZMRP  =   400.0000 IN.                                     GY1     =      .000   GP2     =      [illegible]
SCALE =        0190 SCALE                                                              GY2     =    -3.500   GP3     =      [illegible]
                                                                                       GY3     =     3.500   RUDDER  =    10.[illegible]

MACH  ( 1) =     1.206    BETA  ( 1) =   -6.080

 SECTION ( 1)ORBITER WING                          DEPENDENT VARIABLE CP

ETA          .2990   .4270   .5340   .6730   .7800   .8870

  X/C
   .050                             -.2150           -.1600
   .400              -.1470         -.0990
   .550      .0000          -.1500
   .600                                              -.1520
   .700                             -.2550
   .750      .0000          -.3150           .0000
   .800              -.2840
   .850                             -.4120
   .900                     -.3690                   -.4260
   .950      .0000                  -.4830

MACH  ( 1) =     1.202    BETA  ( 2) =   -3.040

 SECTION ( 1)ORBITER WING                          DEPENDENT VARIABLE CP

ETA          .2990   .4270   .5340   .6730   .7800   .8870

  X/C
   .050                             -.1580           -.0870
   .400              -.0310         -.0150
   .550      .0000          -.0500
   .600                                              -.0940
   .700                             -.1920
   .750      .0000          -.2490           .0000
   .800              -.3680
   .850                             -.3670
   .900                     -.4680                   -.3480
   .950      .0000                  -.4680
```

```
                                CAL T14-053 IA35 O1 T1 S1  LOWER WING  POWER ON          (LUF105)

MACH  ( 1) =    1.202    BETA  ( 3) =     .000

 SECTION ( 1)ORBITER WING                  DEPENDENT VARIABLE CP

ETA          .2990   .4270   .5340   .6730   .7800   .8870

  X/C
   .050                              .1070            .1610
   .400              .3050           .1960
   .550      .0000           .1530
   .600                                              -.0080
   .700                             -.0980
   .750      .0000          -.1750           .0000
   .800             -.4160
   .850                             -.3310
   .900                     -.4900                   -.2780
   .950      .0000                  -.4520
MACH  ( 1) =    1.197    BETA  ( 4) =    3.050

 SECTION ( 1)ORBITER WING                  DEPENDENT VARIABLE CP

ETA          .2990   .4270   .5340   .6730   .7800   .8870

  X/C
   .050                              .2690            .2290
   .400              .3690           .2420
   .550      .0000           .1890
   .600                                               .0130
   .700                             -.0720
   .750      .0000          -.1470           .0000
   .800             -.3720
   .850                             -.3100
   .900                     -.4710                   -.2700
   .950      .0000                  -.4370
MACH  ( 1) =    1.207    BETA  ( 5) =    6.080

 SECTION ( 1)ORBITER WING                  DEPENDENT VARIABLE CP

ETA          .2990   .4270   .5340   .6730   .7800   .8870

  X/C
   .050                              .3500            .2990
   .400              .4210           .2920
   .550      .0000           .2370
   .600                                               .0530
   .700                             -.0420
   .750      .0000          -.1170           .0000
   .800             -.3480
   .850                             -.2870
   .900                     -.4470                   -.2780
```

```
DATE 05 NOV 75           TABULATED DATA FOR CAL T14-053 (IA36)                                                   PAGE  628
                                          CAL T14-053 IA36 01 T1 S1  LOWER WING  POWER ON                 (LUF105)

MACH  ( 1) =    1.207    BETA  ( 5) =    6.080

 SECTION ( 1)ORBITER WING                    DEPENDENT VARIABLE CP

ETA          .2930   .4270   .5340   .6730   .7800   .8870

  X/C
   .950    .0000                  -.3130
```

```
                                        CAL T14-053 IA36 01 T1 S1  LOWER WING  POWER OFF               (LUF106)   ( 09 OCT 73  )

             REFERENCE DATA                                                                          PARAMETRIC DATA

SREF  =  2690.0000 SQ.FT.   XMRP  =    953.0000 IN.                                           ALPHA  =       .000  GP1     =    35.200
LREF  =  1328.0000 IN.      YMRP  =       .0000 IN.                                           GY1    =      2.330  GP2     =      .000
BREF  =  1328.0000 IN.      ZMRP  =    400.0000 IN.                                           GY2    =       .000  GP3     =      .000
SCALE =      .0190 SCALE                                                                      GY3    =     -3.560  RUDDER  =      .000

MACH  ( 1) =    1.208    BETA  ( 1) =   -6.080

 SECTION ( 1)ORBITER WING                     DEPENDENT VARIABLE CP

ETA         .2990   .4270   .5340   .6730   .7800   .8870

  X/C
    .050                            -.2600          -.1710
    .400            -.1720          -.1130
    .550    .0000           -.1730
    .600                                            -.1690
    .700                            -.2630
    .750    .0000           -.3410          .0000
    .800            -.3590
    .850                            -.4320
    .900                    -.4470                  -.4330
    .950    .0000                   -.5140
MACH  ( 1) =    1.206    BETA  ( 2) =   -3.050

 SECTION ( 1)ORBITER WING                     DEPENDENT VARIABLE CP

ETA         .2990   .4270   .5340   .6730   .7800   .8870

  X/C
    .050                            -.1780          -.1040
    .400            -.0400          -.0240
    .550    .0000           -.0530
    .600                                            -.1040
    .700                            -.1980
    .750    .0000           -.2650          .0000
    .800            -.4020
    .850                            -.3720
    .900                    -.4730                  -.3710
    .950    .0000                   -.4710
```

```
                         CAL T14-053 IA36 01 T1 S1  LOWER WING  POWER OFF          (LUF106)

MACH  ( 1) =    1.206   BETA  ( 3) =     .000

 SECTION ( 1)ORBITER WING                 DEPENDENT VARIABLE CP

ETA             .2990   .4270   .5340   .6730   .7800   .8870

  X/C
    .050                                .1040           .1300
    .400                .2720           .1830
    .550        .0000           .1260
    .600                                               -.0320
    .700                               -.1120
    .750        .0000          -.1940           .0000
    .800               -.4340
    .850                               -.3400
    .900                       -.4930                  -.2970
    .950        .0000                  -.4590
MACH  ( 1) =    1.206   BETA  ( 4) =    3.050

 SECTION ( 1)ORBITER WING                 DEPENDENT VARIABLE CP

ETA             .2990   .4270   .5340   .6730   .7800   .8870

  X/C
    .050                                .2480           .2020
    .400                .3350           .2230
    .550        .0000           .1650
    .600                                               -.0050
    .700                               -.0840
    .750        .0000          -.1650           .0000
    .800               -.3920
    .850                               -.3200
    .900                       -.4710                  -.2840
    .950        .0000                  -.4420
MACH  ( 1) =    1.205   BETA  ( 5) =    6.080

 SECTION ( 1)ORBITER WING                 DEPENDENT VARIABLE CP

ETA             .2990   .4270   .5340   .6730   .7800   .8870

  X/C
    .050                                .3170           .2590
    .400                .3830           .2610
    .550        .0000           .1990
    .600                                                .0180
    .700                               -.0640
    .750        .0000          -.1410           .0000
    .800               -.3720
    .850                               -.3050
    .900                       -.4580                  -.3010
```

```
DATE 05 NOV 75              TABULATED DATA FOR CAL T14-053 (IA36)                                                     PAGE  631
                                        CAL T14-053 IA36 01 T1 S1  LOWER WING  POWER OFF                (LUF106)

MACH  ( 1) =     1.205    BETA  ( 5) =    6.080

 SECTION ( 1)ORBITER WING                     DEPENDENT VARIABLE CP

ETA          .2390    .4270    .5340    .6730    .7800    .8870

  X/C
   .950      .0000                      -.3640
```

```
                                     CAL T14-053 IA36 O1 T1 S1  LOWER WING  POWER OFF            (LUF107)    ( 09 OCT 73  )

              REFERENCE DATA                                                                          PARAMETRIC DATA

SREF  =  2690.0000 SQ.FT.   XMRP  =   953.0000 IN.                                    ALPHA  =       .000   GP1     =     36.200
LREF  =  1328.0000 IN.      YMRP  =      .0000 IN.                                    GY1    =      2.330   GP2     =       .000
BREF  =  1328.0000 IN.      ZMRP  =   400.0000 IN.                                    GY2    =       .000   GP3     =       .000
SCALE =      .0190 SCALE                                                              GY3    =     -3.500   RUDDER  =       .000

MACH  ( 1) =      .906    BETA  ( 1) =   -6.080

 SECTION ( 1)ORBITER WING                      DEPENDENT VARIABLE CP

ETA          .2990   .4270   .5340   .6730   .7800   .8870

  X/C
    .050                             -.1820          -.3070
    .400             -.1270          -.1970
    .550     .0000           -.2680
    .600                                             -.4110
    .700                             -.4690
    .750     .0000           -.4220          .0000
    .800             -.2980
    .850                             -.2780
    .900                     -.1160                  -.1070
    .950     .0000                    .0130

MACH  ( 1) =      .911    BETA  ( 2) =   -3.050

 SECTION ( 1)ORBITER WING                      DEPENDENT VARIABLE CP

ETA          .2990   .4270   .5340   .6730   .7800   .8870

  X/C
    .050                             -.0950          -.1950
    .400             -.0800          -.1550
    .550     .0000           -.2350
    .600                                             -.3820
    .700                             -.4790
    .750     .0000           -.4510          .0000
    .800             -.3480
    .850                             -.2040
    .900                     -.0920                  -.2090
    .950     .0000                    .0250
```

```
                         CAL T14-053 IA36 01 T1 S1  LOWER WING  POWER OFF        (LUF107)

MACH   ( 1) =      .900    BETA  ( 3) =      .000

 SECTION ( 1)ORBITER WING                            DEPENDENT VARIABLE CP

ETA            .2990     .4270     .5340     .6730     .7800     .8870

  X/C
     .050                                   -.0090              -.0940
     .400                .0860              -.0790
     .550      .0000              -.1500
     .600                                                       -.3640
     .700                                   -.4530
     .750      .0000              -.4700               .0000
     .800               -.4030
     .850                                   -.3140
     .900                         -.0870                        -.2880
     .950      .0000                         .0140

MACH   ( 1) =      .901    BETA  ( 4) =     3.050

 SECTION ( 1)ORBITER WING                            DEPENDENT VARIABLE CP

ETA            .2990     .4270     .5340     .6730     .7800     .8870

  X/C
     .050                                    .1200              -.0240
     .400                .1450              -.0350
     .550      .0000              -.1040
     .600                                                       -.3250
     .700                                   -.4200
     .750      .0000              -.4460               .0000
     .800               -.3960
     .850                                   -.4520
     .900                         -.0860                        -.3500
     .950      .0000                         .0110

MACH   ( 1) =      .903    BETA  ( 5) =     6.090

 SECTION ( 1)ORBITER WING                            DEPENDENT VARIABLE CP

ETA            .2990     .4270     .5340     .6730     .7800     .8870

  X/C
     .050                                    .1940               .0400
     .400                .1820               .0090
     .550      .0000              -.0820
     .600                                                       -.2980
     .700                                   -.3980
     .750      .0000              -.4440               .0000
     .800               -.4140
     .850                                   -.3960
     .900                         -.1330                        -.3800
```

REPRODUCIBILITY OF THE
ORIGINAL PAGE IS POOR

```
DATE 05 NOV 75            TABULATED DATA FOR CAL T14-053 (IA36)
                                     CAL T14-053 IA36 O1 T1 S1  LOWER WING  POWER OFF            (LUF107)

MACH  ( 1) =      .903    BETA  ( 5) =     6.090

 SECTION ( 1)ORBITER WING                         DEPENDENT VARIABLE CP

ETA          .2990   .4270   .5340   .6730   .7800   .8970

  X/C
   .950      .0000                  -.0610
```

```
                                       CAL T14-053 IA36 01 T1 S1  LOWER WING  POWER ON                 (LUF108)   ( 09 OCT 73  )

              REFERENCE DATA                                                                      PARAMETRIC DATA

SREF  =  2690.0000 SQ.FT.   XMRP  =   953.0000 IN.                                      ALPHA   =      .000  CPR     =    28.310
LREF  =  1328.0000 IN.      YMRP  =      .0000 IN.                                      SRMPR   =     2.020  GP1     =    11.000
BREF  =  1328.0000 IN.      ZMRP  =   400.0000 IN.                                      GY1     =    11.000  GP2     =    -3.500
SCALE =      .0190 SCALE                                                                GY2     =    11.000  GP3     =     3.500
                                                                                        GY3     =     7.000  RUDDER  =     7.000

MACH  ( 1) =     .901    BETA  ( 1) =   -6.080

 SECTION ( 1)ORBITER WING                  DEPENDENT VARIABLE CP

ETA         .2990   .4270   .5340   .6730   .7800   .8870

  X/C
    .050                           -.2030          -.2530
    .400           -.1050          -.1880
    .550    .0000          -.2430
    .600                                           -.3780
    .700                           -.4620
    .750    .0000          -.4230           .0000
    .800           -.3100
    .850                           -.2660
    .900                   -.1130                  -.1050
    .950    .0000                   .0310

MACH  ( 1) =     .889    BETA  ( 2) =   -3.050

 SECTION ( 1)ORBITER WING                  DEPENDENT VARIABLE CP

ETA         .2990   .4270   .5340   .6730   .7800   .8870

  X/C
    .050                           -.1090          -.2140
    .400           -.0830          -.1750
    .550    .0000          -.2510
    .600                                           -.3990
    .700                           -.5140
    .750    .0000          -.5120           .0000
    .800           -.3940
    .850                           -.2360
    .900                   -.1090                  -.2090
    .950    .0000                   .0120
```

```
                                  CAL T14-053 IA36 O1 T1 S1  LOWER WING  POWER ON              (LUF108)

MACH  ( 1) =     .900   BETA  ( 3) =     .000

 SECTION ( 1)ORBITER WING                          DEPENDENT VARIABLE CP

ETA           .2990   .4270   .5340   .6730   .7800   .8870

  X/C
   .050                                .0460           -.0670
   .400                .1080          -.0530
   .550       .0000           -.1200
   .600                                                -.3310
   .700                               -.4340
   .750       .0000           -.4580           .0000
   .800               -.4040
   .850                               -.2880
   .900                       -.0720                   -.2630
   .950       .0000                    .0350

MACH  ( 1) =     .896   BETA  ( 4) =    3.060

 SECTION ( 1)ORBITER WING                          DEPENDENT VARIABLE CP

ETA           .2990   .4270   .5340   .6730   .7800   .8870

  X/C
   .050                                .1470            .0030
   .400                .1640          -.0130
   .550       .0000           -.0900
   .600                                                -.3140
   .700                               -.4200
   .750       .0000           -.4510           .0000
   .800               -.4000
   .850                               -.4500
   .900                       -.0960                   -.3230
   .950       .0000                    .0100

MACH  ( 1) =     .902   BETA  ( 5) =    6.090

 SECTION ( 1)ORBITER WING                          DEPENDENT VARIABLE CP

ETA           .2990   .4270   .5340   .6730   .7800   .8870

  X/C
   .050                                .2230            .0890
   .400                .2200           .0360
   .550       .0000           -.0480
   .600                                                -.2650
   .700                               -.3810
   .750       .0000           -.4170           .0000
   .800               -.4050
   .850                               -.3840
   .900                       -.1330                   -.3470
```

```
DATE 05 NOV 75              TABULATED DATA FOR CAL T14-053 (IA36)                                   (LUF108)
                                      CAL T14-053 IA36 01 T1 S1  LOWER WING  POWER ON

MACH  ( 1) =     .902   BETA  ( 5) =    6.090
 SECTION ( 1)ORBITER WING                  DEPENDENT VARIABLE CP
ETA          .2990   .4270   .5340   .6730   .7800   .8870

  X/C
   .950      .0000                  -.0530
```

```
                                 CAL T14-053 IA36 C1 T1 S1  LOWER WING  POWER ON            (LUF109)   ( 29 OCT 73

              REFERENCE DATA                                                                  PARAMETRIC DATA

SREF  =  2690.0000 SQ.FT.   XMRP  =   953.0000 IN.                               BETA    =       .000   OPR    =    35.200
LREF  =  1328.0000 IN.      YMRP  =      .0000 IN.                               SRMPR   =      2.330   GP1    =    11.000
BREF  =  1328.0000 IN.      ZMRP  =   400.0000 IN.                               GP2     =     11.000   GY2    =    -3.500
SCALE =      .0190 SCALE                                                         GP3     =     11.000   GY3    =     3.500
                                                                                 GP4     =      7.000   GP5    =     7.000

MACH  ( 1) =    1.204    ALPHA ( 1) =    -.120

 SECTION ( 1)ORBITER WING                 DEPENDENT VARIABLE CP

ETA          .2990   .4270   .5340   .6730   .7800   .8870

  X/C
   .050                               .1130           .1480
   .400              .3030            .1950
   .550      .0000           .1520
   .600                                              -.0130
   .700                              -.0990
   .750      .0000          -.1750           .0000
   .800             -.4170
   .850                              -.3270
   .900                     -.4920                   -.2890
   .950      .0000                   -.4510

MACH  ( 1) =    1.203    ALPHA ( 2) =    4.040

 SECTION ( 1)ORBITER WING                 DEPENDENT VARIABLE CP

ETA          .2990   .4270   .5340   .6730   .7800   .8870

  X/C
   .050                               .3990           .4200
   .400              .3600            .2830
   .550      .0000           .2120
   .600                                               .0520
   .700                              -.0410
   .750      .0000          -.1230           .0000
   .800             -.3760
   .850                              -.2840
   .900                     -.4560                   -.3010
   .950      .0000                   -.3160
```

```
DATE 05 NOV 75            TABULATED DATA FOR CAL T14-053 (IA36)                                                      PAGE  639

                                     CAL T14-053 IA36 01 T1 S1  LOWER WING  POWER ON                  (LUF109)

MACH  ( 1) =     1.207    ALPHA ( 3) =     5.920

 SECTION ( 1)ORBITER WING                        DEPENDENT VARIABLE CP

ETA          .2990    .4270    .5340    .6730    .7800    .8870

  X/C
    .050                                .4820             .5120
    .400              .3630             .3160
    .550     .0000             .2220
    .600                                                  .0810
    .700                               -.0170
    .750     .0000            -.1050             .0000
    .800             -.3600
    .850                               -.2600
    .900                      -.4340                     -.2750
    .950     .0000                     -.3130
```

```
DATE 05 NOV 75          TABULATED DATA FOR CAL T14-053 (IA36)                                                    PAGE  540

                                         CAL T14-053 IA36 O1 T1 S1  LOWER WING  POWER ON              (LUF110)    ( 07 OCT 73 )

                REFERENCE DATA                                                                        PARAMETRIC DATA

SREF  =  2690.0000 SQ.FT.   XMRP  =   953.0000 IN.                                       ALPHA  =       .000   OPR     =    36.200
LREF  =  1328.0000 IN.      YMRP  =      .0000 IN.                                       SPMPR  =      2.330   GP1     =    11.000
BREF  =  1328.0000 IN.      ZMRP  =   400.0000 IN.                                       GP2    =     11.000   GY2     =    -3.500
SCALE =       .0190 SCALE                                                                GP3    =     11.000   GY3     =     3.500
                                                                                         GP4    =      7.000   GP5     =     7.000

MACH  ( 1) =    1.202    BETA  ( 1) =   -6.080

 SECTION ( 1)ORBITER WING                        DEPENDENT VARIABLE CP

ETA          .2990   .4270   .5340   .6730   .7800   .8870

  X/C
    .050                             -.2080          -.1640
    .400            -.1400           -.0930
    .550     .0000           -.1510
    .600                                             -.1520
    .700                             -.2520
    .750     .0000           -.3150           .0000
    .800            -.2870
    .850                             -.4180
    .900                     -.3720                  -.4260
    .950     .0000                   -.4840
MACH  ( 1) =    1.209    BETA  ( 2) =   -3.040

 SECTION ( 1)ORBITER WING                        DEPENDENT VARIABLE CP

ETA          .2990   .4270   .5340   .6730   .7800   .8870

  X/C
    .050                             -.1610          -.0840
    .400            -.0130           -.0160
    .550     .0000           -.0490
    .600                                             -.0850
    .700                             -.1870
    .750     .0000           -.2490           .0000
    .800            -.3620
    .850                             -.3620
    .900                     -.4600                  -.3580
    .950     .0000                   -.4550
```

```
                                      CAL T14-053 IA36 01 T1 S1  LOWER WING  POWER ON               (LUF110)

MACH  ( 1) =    1.207    BETA  ( 3) =     .000

 SECTION ( 1)ORBITER WING                 DEPENDENT VARIABLE CP

ETA         .2990   .4270   .5340   .6730   .7800   .8870

  X/C
    .050                             .1130            .1600
    .400            .3110            .2050
    .550    .0000           .1540
    .600                                             -.0080
    .700                            -.0940
    .750    .0000          -.1690            .0000
    .800           -.4100
    .850                            -.3240
    .900                   -.4870                    -.2770
    .950    .0000                   -.4480

MACH  ( 1) =    1.210    BETA  ( 4) =    3.050

 SECTION ( 1)ORBITER WING                 DEPENDENT VARIABLE CP

ETA         .2990   .4270   .5340   .6730   .7800   .8870

  X/C
    .050                             .2630            .2350
    .400            .3780            .2510
    .550    .0000           .2000
    .600                                              .0240
    .700                            -.0600
    .750    .0000          -.1350            .0000
    .800           -.3580
    .850                            -.2970
    .900                   -.4590                    -.2680
    .950    .0000                   -.4230

MACH  ( 1) =    1.204    BETA  ( 5) =    6.080

 SECTION ( 1)ORBITER WING                 DEPENDENT VARIABLE CP

ETA         .2990   .4270   .5340   .6730   .7800   .6870

  X/C
    .050                             .3520            .2980
    .400            .4180            .2920
    .550    .0000           .2340
    .600                                              .0450
    .700                            -.0400
    .750    .0000          -.1170            .0000
    .800           -.3490
    .850                            -.2870
    .900                   -.4530                    -.2900
```

```
DATE 05 NOV 75            TABULATED DATA FOR CAL T14-053 (IA35)                                                       PAGE  6-2
                                        CAL T14-053 IA35 O1 T1 S1  LOWER WING  POWER ON                 (LUF110)

MACH  ( 1) =    1.204    BETA  ( 5) =    6.080

 SECTION ( 1)ORBITER WING                    DEPENDENT VARIABLE CP

ETA          .2990    .4270    .5340    .6730    .7800    .8870

  X/C
    .950    .0000                     -.3440
```

```
DATE 05 NOV 75          TABULATED DATA FOR CAL T14-053 (IA36)                                                   PAGE  543

                                     CAL T14-053 IA36 01 T1 S1  LOWER WING  POWER ON               (LUF111)    ( 09 OCT 73  )

              REFERENCE DATA                                                                   PARAMETRIC DATA

SREF  =  2690.0000 SQ.FT.   XMRP  =   953.0000 IN.                                 BETA    =       .000   OPR     =     28.310
LREF  =  1328.0000 IN.      YMRP  =      .0000 IN.                                 SRMPR   =      2.020   GP1     =     11.000
BREF  =  1328.0000 IN.      ZMRP  =   400.0000 IN.                                 GP2     =     11.000   GY2     =     -3.500
SCALE =      .0190 SCALE                                                           GP3     =     11.000   GY3     =      3.500
                                                                                   GP4     =      7.000   GP5     =      7.000

MACH  ( 1) =      .900    ALPHA ( 1) =   -8.110

 SECTION ( 1)ORBITER WING                      DEPENDENT VARIABLE CP

ETA          .2990    .4270    .5340    .6730    .7800    .8870

  X/C
    .050                                -.6930            -.6660
    .400               .0020            -.1950
    .550     .0000             -.2260
    .600                                                  -.4970
    .700                                -.5400
    .750     .0000             -.5380             .0000
    .800              -.4490
    .850                                -.1720
    .900                       -.1310                     -.1480
    .950     .0000                      -.0370
MACH  ( 1) =      .899    ALPHA ( 2) =   -4.120

 SECTION ( 1)ORBITER WING                      DEPENDENT VARIABLE CP

ETA          .2990    .4270    .5340    .6730    .7800    .8870

  X/C
    .050                                -.4530            -.5080
    .400               .0650            -.1370
    .550     .0000             -.1740
    .600                                                  -.4050
    .700                                -.4990
    .750     .0000             -.5010             .0000
    .800              -.4260
    .850                                -.2080
    .900                       -.1070                     -.0460
    .950     .0000                      -.0060
```

```
DATE 05 NOV 75            TABULATED DATA FOR CAL T14-053 (IA36)                                              PAGE  644
                                        CAL T14-053 IA36 01 T1 S1  LOWER WING  POWER ON              (LUF111)

MACH  ( 1) =     .904    ALPHA ( 3) =    -.100

 SECTION ( 1)ORBITER WING                    DEPENDENT VARIABLE CP

ETA          .2990   .4270   .5340   .6730   .7800   .8870

  X/C
    .050                              .0110           -.0700
    .400             .1180           -.0610
    .550     .0000           -.1210
    .600                                              -.3290
    .700                             -.4330
    .750     .0000           -.4610           .0000
    .800            -.4040
    .850                             -.2410
    .900                     -.0780                   -.2650
    .950     .0000                    .0230
MACH  ( 1) =     .901    ALPHA ( 4) =    3.970

 SECTION ( 1)ORBITER WING                    DEPENDENT VARIABLE CP

ETA          .2990   .4270   .5340   .6730   .7800   .8870

  X/C
    .050                              .2300            .2060
    .400             .1500            .0130
    .550     .0000           -.0850
    .600                                              -.2670
    .700                             -.3870
    .750     .0000           -.4160           .0000
    .800            -.4230
    .850                             -.4340
    .900                     -.2360                   -.4290
    .950     .0000                   -.1790
MACH  ( 1) =     .902    ALPHA ( 5) =    5.990

 SECTION ( 1)ORBITER WING                    DEPENDENT VARIABLE CP

ETA          .2990   .4270   .5340   .6730   .7800   .8870

  X/C
    .050                              .3220            .3000
    .400             .1650            .0610
    .550     .0000           -.0610
    .600                                              -.2220
    .700                             -.3460
    .750     .0000           -.3880           .0000
    .800            -.4340
    .850                             -.4820
    .900                     -.3470                   -.4710
```

```
                                          CAL T14-053 IA36 01 T1 S1  LOWER WING  POWER ON                   (LUF111)

MACH  ( 1) =      .902   ALPHA ( 5) =    5.990

 SECTION ( 1)ORBITER WING                     DEPENDENT VARIABLE CP

ETA          .2990   .4270   .5340   .6730   .7800   .8870

  X/C
    .950     .0000                  -.2860
```

```
DATE 05 NOV 75          TABULATED DATA FOR CAL T14-053 (IA36)                                                 PAGE  8-5

                                  CAL T14-053 IA36 01 T1 S1  LOWER WING  POWER ON               (LUF112)   ( 0  OCT 73  )

                  REFERENCE DATA                                                                     PARAMETRIC DATA

SPEF  =  2690.0000 SQ.FT.   XMPP  =    953.0000 IN.                                ALPHA   =      .000   OPR     =     28.310
LREF  =  1328.0000 IN.      YMRP  =       .0000 IN.                                SRMPR   =     2.020   GP1     =     11.000
BREF  =  1328.0000 IN.      ZMRP  = .  400.0000 IN.                                GP2     =    11.000   GY2     =     -3.500
SCALE =      .0190 SCALE                                                           GP3     =    11.000   GY3     =      3.500
                                                                                   GP4     =     7.000   GP5     =      7.000

MACH  ( 1) =      .901    BETA  ( 1) =    -6.080

 SECTION ( 1)OPBITER WING                      DEPENDENT VARIABLE CP

ETA          .2990   .4270   .5340   .6730   .7800   .8870

  X/C
    .050                             -.2640          -.3360
    .400            -.1300           -.1970
    .550     .0000           -.2700
    .600                                             -.4140
    .700                             -.5040
    .750     .0000           -.4580           .0000
    .800            -.3340
    .850                             -.2720
    .900                     -.1280                  -.0880
    .950     .0000                    .0080
MACH  ( 1) =      .904    BETA  ( 2) =    -3.050

 SECTION ( 1)ORBITER WING                      DEPENDENI VARIABLE CP

ETA          .2990   .4270   .5340   .6730   .7800   .8870

  X/C
    .050                             -.1020          -.2110
    .400            -.0610           -.1530
    .550     .0000           -.2320
    .600                                             -.3850
    .700                             -.4980
    .750     .0000           -.5170           .0000
    .800            -.3900
    .850                             -.1860
    .900                     -.0960                  -.2150
    .950     .0000                    .0090
```

```
                                                CAL T14-053 IA36 01 T1 S1  LOWER WING  POWER ON              (LUF112)

MACH  ( 1) =     .902   BETA  ( 3) =     .000

 SECTION ( 1)ORBITER WING                 DEPENDENT VARIABLE CP

ETA         .2990   .4270   .5340   .6730   .7800   .8870

  X/C
    .050                               -.0040          -.0910
    .400            .1160              -.0620
    .550    .0000          -.1270
    .600                                               -.3430
    .700                               -.4510
    .750    .0000          -.4790          .0000
    .800           -.4150
    .850                               -.2360
    .900                   -.0790                      -.2750
    .950    .0000                       .0060

MACH  ( 1) =     .900   BETA  ( 4) =    3.050

 SECTION ( 1)ORBITER WING                 DEPENDENT VARIABLE CP

ETA         .2990   .4270   .5340   .6730   .7800   .8870

  X/C
    .050                                .1360           .0090
    .400            .1700              -.0110
    .550    .0000          -.0830
    .600                                               -.3100
    .700                               -.4120
    .750    .0000          -.4480          .0000
    .800           -.4150
    .850                               -.4400
    .900                   -.1090                      -.3150
    .950    .0000                       .0090

MACH  ( 1) =     .899   BETA  ( 5) =    6.090

 SECTION ( 1)ORBITER WING                 DEPENDENT VARIABLE CP

ETA         .2990   .4270   .5340   .6730   .7800   .8870

  X/C
    .050                                .2010           .0720
    .400            .2100               .0240
    .550    .0000          -.0540
    .600                                               -.2730
    .700                               -.3960
    .750    .0000          -.4290          .0000
    .800           -.4300
    .850                               -.3880
    .900                   -.1480                      -.3500
```

```
DATE 05 NOV 75           TABULATED DATA FOR CAL T14-053 (IA36)                                                 PAGE  648
                                      CAL T14-053 IA36 01 T1 S1  LOWER WING  POWER ON                (LUF112)

MACH  ( 1) =     .899    BETA  ( 5) =    6.090

 SECTION ( 1)ORBITER WING                    DEPENDENT VARIABLE CP

ETA          .2990   .4270   .5340   .6730   .7800   .8870

  X/C
    .950     .0000                   -.0670
```

```
                                       CAL T14-053 IA36 01 T1 S1  LOWER WING  POWER ON            (LUF113)   ( 09 OCT 73  )

              REFERENCE DATA                                                                    PARAMETRIC DATA

SREF  =  2690.0000 SQ.FT.   XMRP  =    953.0000 IN.                                     BETA    =      .000  OPR     =    36.200
LREF  =  1328.0000 IN.      YMRP  =       .0000 IN.                                     SRMPR   =     2.330  GP1     =   -11.000
BREF  =  1328.0000 IN.      ZMRP  =    400.0000 IN.                                     GP2     =    -8.000  GY2     =    -3.500
SCALE =      .0190 SCALE                                                                GP3     =    -8.000  GY3     =     3.500
                                                                                        GP4     =    -7.000  GP5     =    -7.000

MACH  ( 1) =    1.204   ALPHA ( 1) =    -8.030

 SECTION ( 1)ORBITER WING                 DEPENDENT VARIABLE CP

ETA         .2990   .4270   .5340   .6730   .7800   .8870

  X/C
    .050                           -.4390          -.3540
    .400            .1420           .0340
    .550    .0000           .0390
    .600                                           -.3120
    .700                           -.2040
    .750    .0000          -.2820           .0000
    .800           -.4150
    .850                           -.4100
    .900                   -.5440                  -.3770
    .950    .0000                  -.5210

MACH  ( 1) =    1.209   ALPHA ( 2) =    -4.010

 SECTION ( 1)ORBITER WING                 DEPENDENT VARIABLE CP

ETA         .2990   .4270   .5340   .6730   .7800   .8870

  X/C
    .050                           -.2820          -.1950
    .400            .2340           .1340
    .550    .0000           .1010
    .600                                           -.0570
    .700                           -.1350
    .750    .0000          -.2120           .0000
    .800           -.4000
    .850                           -.3550
    .900                   -.5110                  -.3620
    .950    .0000                  -.4740
```

```
                                        CAL T14-053 (IA35 O1 T1 S1  LOWER WING  POWER ON                (LUF113)

MACH  ( 1) =    1.209    ALPHA ( 3) =      .010

 SECTION ( 1)ORBITER WING                       DEPENDENT VARIABLE CP

ETA          .2990   .4270   .5340   .6730   .7800   .8870

  X/C
    .050                                .1190           .1690
    .400             .3120              .2030
    .550    .0000            .1620
    .600                                                -.0010
    .700                               -.0900
    .750    .0000           -.1650              .0000
    .800            -.3840
    .850                               -.3200
    .900                    -.4830                      -.2790
    .950    .0000                      -.4420

MACH  ( 1) =    1.201    ALPHA ( 4) =     3.990

 SECTION ( 1)ORBITER WING                       DEPENDENT VARIABLE CP

ETA          .2990   .4270   .5340   .6730   .7800   .8870

  X/C
    .050                                .4110           .4190
    .400             .3460              .2840
    .550    .0000            .2090
    .600                                                .0470
    .700                               -.0430
    .750    .0000           -.1280              .0000
    .800            -.3630
    .850                               -.2860
    .900                    -.4490                      -.3040
    .950    .0000                      -.3200

MACH  ( 1) =    1.204    ALPHA ( 5) =     6.000

 SECTION ( 1)ORBITER WING                       DEPENDENT VARIABLE CP

ETA          .2990   .4270   .5340   .6730   .7800   .8870

  X/C
    .050                                .4900           .5120
    .400             .3570              .3160
    .550    .0000            .2250
    .600                                                .0860
    .700                               -.0150
    .750    .0000           -.1060              .0000
    .800            -.3420
    .850                               -.2590
    .900                    -.4260                      -.2750
```

```
DATE 05 NOV 75           TABULATED DATA FOR CAL T14-053 (IA36)                                                 PAGE  651
                                       CAL T14-053 IA36 01 T1 S1  LOWER WING  POWER ON                (LUF113)

MACH  ( 1) =    1.204    ALPHA ( 5) =    6.000

 SECTION ( 1)ORBITER WING                        DEPENDENT VARIABLE CP

ETA          .2990    .4270    .5340    .6730    .7800    .8870

  X/C
    .950    .0000                       -.3150
```

```
                                      CAL T14-053 IA35 O1 T1 S1  LOWER WING  POWER ON              (LUF114)    ( 05 OCT 73  )

                 REFERENCE DATA                                                                         PARAMETRIC DATA

SREF   =  2690.0000 SQ.FT.   XMRP   =   953.0000 IN.                                    ALPHA   =        .000   OPR      =     36.200
LREF   =  1328.0000 IN.      YMRP   =      .0000 IN.                                    SRMPP   =       1.330   GP1      =    -11.000
BREF   =  1328.0000 IN.      ZMRP   =   400.0000 IN.                                    GP2     =      -8.000   GY2      =     -3.500
SCALE  =      .0150 SCALE                                                               GP3     =      -8.000   GY3      =      3.500
                                                                                        GP4     =      -7.000   GP5      =     -7.000

MACH  ( 1) =     1.207    BETA  ( 1) =    -6.070

 SECTION ( 1)ORBITER WING                        DEPENDENT VARIABLE CP

ETA           .2990    .4270    .5340    .6730    .7800    .8870

  X/C
    .050                                 -.1840             -.1540
    .400              -.1390             -.0900
    .550      .0000             -.1370
    .600                                                    -.1460
    .700                                 -.2440
    .750      .0000             -.2910             .0000
    .800              -.2460
    .850                                 -.3980
    .900                        -.3160                      -.4190
    .950      .0000                      -.4650
MACH  ( 1) =     1.203    BETA  ( 2) =    -3.040

 SECTION ( 1)ORBITER WING                        DEPENDENT VARIABLE CP

ETA           .2990    .4270    .5340    .6730    .7800    .8870

  X/C
    .050                                 -.1410             -.0750
    .400              -.0220             -.0030
    .550      .0000             -.0470
    .600                                                    -.0920
    .700                                 -.1870
    .750      .0000             -.2420             .0000
    .800              -.3340
    .850                                 -.3650
    .900                        -.4580                      -.3270
    .950      .0000                      -.4620
```

```
                               CAL T14-053 IA36 O1 T1 S1  LOWER WING  POWER ON              (LUF114)

MACH  ( 1) =    1.200   BETA  ( 3) =     .000

 SECTION ( 1)ORBITER WING                DEPENDENT VARIABLE CP

ETA          .2990   .4270   .5340   .6730   .7800   .8870

  X/C
    .050                             .1230           .1550
    .400             .3070           .2020
    .550     .0000           .1490
    .600                                            -.0170
    .700                            -.1000
    .750     .0000          -.1760           .0000
    .800            -.4010
    .850                            -.3320
    .900                    -.4910                  -.2960
    .950     .0000                  -.4560

MACH  ( 1) =    1.204   BETA  ( 4) =    3.050

 SECTION ( 1)ORBITER WING                DEPENDENT VARIABLE CP

ETA          .2990   .4270   .5340   .6730   .7800   .8870

  X/C
    .050                             .2640           .2480
    .400             .3740           .2450
    .550     .0000           .2000
    .600                                             .0220
    .700                            -.0640
    .750     .0000          -.1370           .0000
    .800            -.3370
    .850                            -.3010
    .900                    -.4560                  -.2820
    .950     .0000                  -.4260

MACH  ( 1) =    1.202   BETA  ( 5) =    6.080

 SECTION ( 1)ORBITER WING                DEPENDENT VARIABLE CP

ETA          .2990   .4270   .5340   .6730   .7800   .8870

  X/C
    .050                             .3460           .2330
    .400             .4180           .2850
    .550     .0000           .2290
    .600                                             .0430
    .700                            -.0450
    .750     .0000          -.1170           .0000
    .800            -.3370
    .850                            -.2890
    .900                    -.4520                  -.2990
```

```
                                   CAL T14-053 (A35 01 T1 S1  LOWER WING  POWER ON                (LUF114)

MACH  ( 1) =    1.202   BETA  ( 5) =    6.080

 SECTION ( 1)ORBITER WING                       DEPENDENT VARIABLE CP

ETA          .2990   .4270   .5340   .6730   .7800   .8870

  X/C
   .950    .0000                   -.3310
```

```
                                        CAL T14-053 IA36 O1 T1 S1  LOWER WING  POWER ON              (LUF115)   ( 09 OCT 73  )

                 REFERENCE DATA                                                                       PARAMETRIC DATA

SREF  =  2690.0000 SQ.FT.   XMRP  =    953.0000 IN.                                     BETA   =      .000   OPR    =    28.310
LREF  =  1328.0000 IN.      YMRP  =       .0000 IN.                                     SRMPR  =     2.020   GP1    =   -11.000
BREF  =  1328.0000 IN.      ZMRP  =    400.0000 IN.                                     GP2    =    -8.000   GY2    =    -3.500
SCALE =      .0190 SCALE                                                                GP3    =    -8.000   GY3    =     3.500
                                                                                        GP4    =    -7.000   GP5    =    -7.000

MACH  ( 1) =     .902   ALPHA ( 1) =   -8.060

 SECTION ( 1)ORBITER WING                     DEPENDENT VARIABLE CP

ETA          .2990     .4270     .5340     .6730     .7800     .8870

  X/C
    .050                                  -.6640              -.6720
    .400               .0050              -.1930
    .550     .0000               -.2210
    .600                                                      -.5270
    .700                                  -.5350
    .750     .0000               -.5310               .0000
    .800              -.4420
    .850                                  -.1750
    .900                         -.1210                       -.1500
    .950     .0000                        -.0350
MACH  ( 1) =     .904   ALPHA ( 2) =   -3.970

 SECTION ( 1)ORBITER WING                     DEPENDENT VARIABLE CP

ETA          .2990     .4270     .5340     .6730     .7800     .8870

  X/C
    .050                                  -.4070              -.4830
    .400               .0850              -.1280
    .550     .0000               -.1620
    .600                                                      -.3950
    .700                                  -.4860
    .750     .0000               -.4990               .0000
    .800              -.4080
    .850                                  -.2090
    .900                         -.1010                       -.0570
    .950     .0000                         .0010
```

```
DATE 05 NOV 75              TABULATED DATA FOR CAL T14-053 (IA35)

                                      CAL T14-053 IA36 O1 T1 S1  LOWER WING  POWER ON              (LUF115)
MACH  ( 1) =      .902   ALPHA ( 3) =     .070
 SECTION ( 1)ORBITER WING                         DEPENDENT VARIABLE CP
ETA           .2990   .4270   .5340   .6730   .7800   .8870
  X/C
   .050                                .0030           -.0540
   .400                .1220          -.0610
   .550       .0000           -.1190
   .600                                                -.3320
   .700                               -.4460
   .750       .0000           -.4660           .0000
   .800               -.4120
   .850                               -.2800
   .900                       -.0890                   -.2840
   .950       .0000                    .0150
MACH  ( 1) =      .903   ALPHA ( 4) =    3.860
 SECTION ( 1)ORBITER WING                         DEPENDENT VARIABLE CP
ETA           .2990   .4270   .5340   .6730   .7800   .8870
  X/C
   .050                                .2080            .1610
   .400                .1250           .0040
   .550       .0000           -.0930
   .600                                                -.2740
   .700                               -.3820
   .750       .0000           -.4070           .0000
   .800               -.3990
   .850                               -.4290
   .900                       -.1730                   -.4300
   .950       .0000                   -.1480
MACH  ( 1) =      .900   ALPHA ( 5) =    5.990
 SECTION ( 1)ORBITER WING                         DEPENDENT VARIABLE CP
ETA           .2990   .4270   .5340   .6730   .7800   .8870
  X/C
   .050                                .3230            .3010
   .400                .1590           .0560
   .550       .0000           -.0530
   .600                                                -.2110
   .700                               -.3450
   .750       .0000           -.3820           .0000
   .800               -.4210
   .850                               -.5070
   .900                       -.3950                   -.5030
```

```
                                          CAL T14-053 IA36 01 T1 S1  LOWER WING  POWER ON              (LUF115)

MACH  ( 1) =     .900   ALPHA ( 5) =    5.990

 SECTION ( 1)ORBITER WING                      DEPENDENT VARIABLE CP

ETA           .2990   .4270   .5340   .6730   .7800   .8870

  X/C
    .950      .0000                   -.3140
```

```
DATE 05 NOV 75            TABULATED DATA FOR CAL T14-053 (IA36)                                                    PAGE  659

                                     CAL T14-053 IA36 01 T1 S1  LOWER WING  POWER ON                    (LUF116)   ( 09 OCT 73  )

                 REFERENCE DATA                                                                           PARAMETRIC DATA

SREF  =  2690.0000 SQ.FT.   XMRP  =    953.0000 IN.                                  ALPHA  =      .000  CPR    =    28.310
LREF  =  1328.0000 IN.      YMRP  =       .0000 IN.                                  SRMPR  =     2.020  GP1    =   -11.000
BREF  =  1328.0000 IN.      ZMRP  =    400.0000 IN.                                  GP2    =    -8.000  GY2    =    -3.500
SCALE =      .0190 SCALE                                                             GP3    =    -8.000  GY3    =     3.500
                                                                                     GP4    =    -7.000  GP5    =    -7.000

MACH   ( 1) =      .901    BETA   ( 1) =    -6.080

 SECTION ( 1)ORBITER WING                     DEPENDENT VARIABLE CP

ETA           .2990    .4270    .5340    .6730    .7800    .8870

  X/C
    .050                                  -.2130           -.3060
    .400               -.1200             -.1930
    .550      .0000             -.2640
    .600                                                   -.4110
    .700                                  -.4950
    .750      .0000             -.4690             .0000
    .800               -.3520
    .850                                  -.3650
    .900                        -.1450                     -.1260
    .950      .0000                       -.0140
MACH   ( 1) =      .901    BETA   ( 2) =    -3.050

 SECTION ( 1)ORBITER WING                     DEPENDENT VARIABLE CP

ETA           .2990    .4270    .5340    .6730    .7800    .8870

  X/C
    .050                                  -.1090           -.1980
    .400               -.0540             -.1500
    .550       0000             -.2230
    .600                                                   -.3810
    .700                                  -.5020
    .750      .0000             -.5100             .0000
    .800               -.3950
    .850                                  -.2400
    .900                        -.1070                     -.2980
    .950      .0000                       -.0150
```

```
                                       CAL T14-053 IA36 01 T1 S1  LOWER WING  POWER ON            (LUF116)

MACH  ( 1) =     .899    BETA  ( 3) =     .000

 SECTION ( 1)ORBITER WING                 DEPENDENT VARIABLE CP

ETA         .2990   .4270   .5340   .6730   .7800   .8870

  X/C
    .050                            .0090          -.0640
    .400            .1240          -.0560
    .550    .0000          -.1250
    .600                                           -.3350
    .700                           -.4420
    .750    .0000          -.4660           .0000
    .800           -.4010
    .850                           -.2970
    .900                   -.0890                  -.2840
    .950    .0000                   .0220

MACH  ( 1) =     .899    BETA  ( 4) =    3.060

 SECTION ( 1)ORBITER WING                 DEPENDENT VARIABLE CP

ETA         .2990   .4270   .5340   .6730   .7800   .8870

  X/C
    .050                            .1340           .0140
    .400            .1750          -.0130
    .550    .0000          -.0870
    .600                                           -.3150
    .700                           -.4230
    .750    .0000          -.4520           .0000
    .800           -.4210
    .850                           -.4740
    .900                   -.1160                  -.3150
    .950    .0000                  -.0420

MACH  ( 1) =     .902    BETA  ( 5) =    6.090

 SECTION ( 1)ORBITER WING                 DEPENDENT VARIABLE CP

ETA         .2990   .4270   .5340   .6730   .7800   .8870

  X/C
    .050                            .2130           .0720
    .400            .2070           .0260
    .550    .0000          -.0570
    .600                                           -.2820
    .700                           -.3940
    .750    .0000          -.4360           .0000
    .800           -.4500
    .850                           -.3880
    .900                   -.1580                  -.3670
```

```
                                          CAL T14-053 IA36 01 T1 S1  LOWER WING  POWER ON                  (LUF115)

MACH  ( 1) =     .902    BETA  ( 5) =    6.090

 SECTION ( 1)ORBITER WING                         DEPENDENT VARIABLE CP

ETA          .2990   .4270   .5340   .6730   .7800   .8870

  X/C
    .950    .0000                   -.0970
```

```
                                   CAL T14-053 IA36 01 T1 S1  LOWER WING  POWER OFF              (LUF117)   ( 09 OCT 73  )

            REFERENCE DATA                                                                    PARAMETRIC DATA

SREF  =  2690.0000 SQ.FT.   XMRP  =   953.0000 IN.                          BETA    =       .000  GP1     =       .000
LREF  =  1328.0000 IN.      YMRP  =      .0000 IN.                          GP2     =       .000  GY2     =     -3.500
BREF  =  1328.0000 IN.      ZMRP  =   400.0000 IN.                          GP3     =       .000  GY3     =      3.500
SCALE =      .0190 SCALE                                                    GP4     =       .000  GP5     =       .000

MACH  ( 1) =    1.206    ALPHA ( 1) =   -8.090

 SECTION ( 1)ORBITER WING                    DEPENDENT VARIABLE CP

ETA          .2990   .4270   .5340   .6730   .7800   .8870

  X/C
    .050                             -.4580          -.3770
    .400             .1130            .0150
    .550     .0000           .0120
    .600                                             -.3090
    .700                             -.2190
    .750     .0000          -.2970           .0000
    .800            -.5000
    .850                             -.4200
    .900                    -.5680                   -.3780
    .950     .0000                   -.5270

MACH  ( 1) =    1.205    ALPHA ( 2) =   -6.110

 SECTION ( 1)ORBITER WING                    DEPENDENT VARIABLE CP

ETA          .2990   .4270   .5340   .6730   .7800   .8870

  X/C
    .050                             -.4110          -.3420
    .400             .1500            .0550
    .550     .0000           .0340
    .600                                             -.1060
    .700                             -.1980
    .750     .0000          -.2710           .0000
    .800            -.4820
    .850                             -.3970
    .900                    -.5520                   -.3730
    .950     .0000                   -.5070
```

```
                                           CAL T14-053 IA36 01 T1 S1  LOWER WING  POWER OFF                (LUF117)

MACH  ( 1) =     1.208    ALPHA ( 3) =    -4.070

 SECTION ( 1)ORBITER WING                           DEPENDENT VARIABLE CP

ETA            .2990   .4270    .5340    .6730    .7800    .8870

  X/C
    .050                                 -.3130            -.2470
    .400               .1870              .1070
    .550       .0000            .0690
    .600                                                   -.0810
    .700                                 -.1630
    .750       .0000           -.2360              .0000
    .800              -.4570
    .850                                 -.3720
    .900                           -.5250                  -.3830
    .950       .0000                     -.4580
MACH  ( 1) =     1.206    ALPHA ( 4) =    -2.010

 SECTION ( 1)ORBITER WING                           DEPENDENT VARIABLE CP

ETA            .2990   .4270    .5340    .6730    .7800    .8870

  X/C
    .050                                 -.1610            -.0370
    .400               .2360              .1380
    .550       .0000            .0950
    .600                                                   -.0670
    .700                                 -.1380
    .750       .0000           -.2160              .0000
    .800              -.4420
    .850                                 -.3570
    .900                           -.5140                  -.3770
    .950       .0000                     -.4760
MACH  ( 1) =     1.207    ALPHA ( 5) =     -.030

 SECTION ( 1)ORBITER WING                           DEPENDENT VARIABLE CP

ETA            .2990   .4270    .5340    .6730    .7800    .8870

  X/C
    .050                                  .0840             .1260
    .400               .2690              .1690
    .550       .0000            .1240
    .600                                                   -.0350
    .700                                 -.1130
    .750       .0000           -.1930              .0000
    .800              -.4310
    .850                                 -.3400
    .900                           -.4960                  -.3140
```

```
                                   CAL T14-053 IA36 01 T1 S1  LOWER WING  POWER OFF            (LUF117)
MACH  ( 1) =    1.207   ALPHA ( 5) =    -.030
 SECTION ( 1)ORBITER WING                    DEPENDENT VARIABLE CP
ETA         .2990   .4270   .5340   .6730   .7800   .8870

  X/C
   .950     .0000                  -.4580
MACH  ( 1) =    1.205   ALPHA ( 6) =    2.030
 SECTION ( 1)ORBITER WING                    DEPENDENT VARIABLE CP
ETA         .2990   .4270   .5340   .6730   .7800   .8870

  X/C
   .050                             .2700           .2700
   .400             .2820           .2190
   .550     .0000           .1500
   .600                                            -.0080
   .700                            -.0870
   .750     .0000          -.1730           .0000
   .800            -.4190
   .850                            -.3220
   .900                    -.4820                  -.3330
   .950     .0000                  -.3640
MACH  ( 1) =    1.205   ALPHA ( 7) =    4.000
 SECTION ( 1)ORBITER WING                    DEPENDENT VARIABLE CP
ETA         .2990   .4270   .5340   .6730   .7800   .8870

  X/C
   .050                             .3690           .3800
   .400             .3140           .2600
   .550     .0000           .1760
   .600                                             .0240
   .700                            -.0600
   .750     .0000          -.1470           .0000
   .800            -.3940
   .850                            -.2950
   .900                    -.4590                  -.3170
   .950     .0000                  -.3330
```

```
                                        CAL T14-053 IA36 O1 T1 S1  LOWER WING  POWER OFF                (LUF117)

MACH  ( 1) =     1.205    ALPHA ( 8) =     5.960

 SECTION ( 1)ORBITER WING                          DEPENDENT VARIABLE CP

ETA          .2990    .4270    .5340    .6730    .7800    .8870

  X/C
    .050                                 .4490             .4750
    .400             .3210               .2850
    .550    .0000             .1900
    .600                                                   .0550
    .700                                -.0380
    .750    .0000            -.1300              .0000
    .800            -.3800
    .850                                -.2750
    .900                     -.4450                       -.2930
    .950    .0000                       -.3350
MACH  ( 1) =     1.205    ALPHA ( 9) =     7.990

 SECTION ( 1)ORBITER WING                          DEPENDENT VARIABLE CP

ETA          .2990    .4270    .5340    .6730    .7800    .8870

  X/C
    .050                                 .5160             .5490
    .400             .3210               .3080
    .550    .0000             .1970
    .600                                                   .0850
    .700                                -.0240
    .750    .0000            -.1180              .0000
    .800            -.3740
    .850                                -.2580
    .900                     -.4310                       -.2690
    .950    .0000                       -.3820
```

```
                                        CAL T14-053 IA36 O1 T1 S1  LOWER WING  POWER OFF              (LUF118)

MACH  ( 1) =     1.206    BETA  ( 5) =   -2.020

 SECTION ( 1)ORBITER WING                          DEPENDENT VARIABLE CP

ETA          .2990   .4270   .5340   .6730   .7800   .8870

  X/C
    .950    .0000                  -.4640

MACH  ( 1) =     1.205    BETA  ( 6) =     .000

 SECTION ( 1)ORBITER WING                          DEPENDENT VARIABLE CP

ETA          .2390   .4270   .5340   .6730   .7800   .8870

  X/C
    .050                            .0820           .1160
    .400            .2670           .1720
    .550    .0000           .1220
    .600                                           -.0360
    .700                           -.1130
    .750    .0000          -.1940           .0000
    .800           -.4340
    .850                           -.3400
    .900                   -.4960                  -.3120
    .950    .0000                  -.4600

MACH  ( 1) =     1.205    BETA  ( 7) =    2.020

 SECTION ( 1)ORBITER WING                          DEPENDENT VARIABLE CP

ETA          .2990   .4270   .5340   .6730   .7800   .8870

  X/C
    .050                            .1990           .1730
    .400            .3240           .2100
    .550    .0000           .1560
    .600                                           -.0130
    .700                           -.0930
    .750    .0000          -.1710           .0000
    .800           -.4010
    .850                           -.3230
    .900                   -.4790                  -.3070
    .950    .0000                  -.4480
```

```
                                   CAL T14-053 IA36 01 T1 S1  LOWER WING  POWER OFF              (LUF118)

MACH  ( 1) =     1.207    BETA  ( 8) =     3.040

 SECTION ( 1)ORBITER WING                        DEPENDENT VARIABLE CP

ETA          .2990   .4270   .5340   .6730   .7800   .8870

  X/C
    .050                             .2330           .2050
    .400             .3390           .2210
    .550     .0000           .1680
    .600                                            -.0030
    .700                            -.0820
    .750     .0000          -.1630           .0000
    .800            -.3860
    .850                            -.3140
    .900                    -.4720                  -.3100
    .950     .0000                  -.4380
MACH  ( 1) =     1.206    BETA  ( 9) =     4.030

 SECTION ( 1)ORBITER WING                        DEPENDENT VARIABLE CP

ETA          .2990   .4270   .5340   .5730   .7800   .8870

  X/C
    .050                             .2580           .2220
    .400             .3530           .2300
    .550     .0000           .1760
    .600                                             .0000
    .700                            -.0760
    .750     .0000          -.1570           .0000
    .800            -.3800
    .850                            -.3120
    .900                    -.4680                  -.3120
    .950     .0000                  -.4370
MACH  ( 1) =     1.206    BETA  (10) =     6.060

 SECTION ( 1)ORBITER WING                        DEPENDENT VARIABLE CP

ETA          .2990   .4270   .5340   .5730   .7800   .8970

  X/C
    .050                             .3210           .2500
    .400             .3860           .2620
    .550     .0000           .2000
    .600                                             .0170
    .700                            -.0610
    .750     .0000          -.1400           .0000
    .800            -.3690
    .850                            -.3030
    .900                    -.4610                  -.3140
```

```
DATE 05 NOV 75           TABULATED DATA FOR CAL T14-053 (IA35)                                    PAGE  659
                                  CAL T14-053 IA36 01 T1 S1  LOWER WING  POWER OFF          (LUF118)

MACH  ( 1) =     1.206    BETA  (10) =     6.060

 SECTION ( 1)ORBITER WING                 DEPENDENT VARIABLE CP

ETA         .2990   .4270   .5340   .6730   .7800   .8870

  X/C
    .950    .0000                  -.3750

MACH  ( 1) =     1.207    BETA  (11) =     8.090

 SECTION ( 1)ORBITER WING                 DEPENDENT VARIABLE CP

ETA         .2990   .4270   .5340   .6730   .7800   .8870

  X/C
    .050                            .3650           .2880
    .400            .4160           .2870
    .550    .0000           .2210
    .600                                            .0360
    .700                           -.0450
    .750    .0000          -.1210           .0000
    .800           -.3530
    .850                           -.2890
    .900                   -.4460                  -.3010
    .950    .0000                  -.2960
```

```
DATE 05 NOV 75            TABULATED DATA FOR CAL T14-053 (IA36)                                                          PAGE  670

                                        CAL T14-053 IA36 01 T1 S1  LOWER WING  POWER OFF                (LUF119)   ( 09 OCT 73  )

              REFERENCE DATA                                                                        PARAMETRIC DATA

SREF  =  2690.0000 SQ.FT.   XMRP  =    953.0000 IN.                                     BETA   =       .000   GP1    =      .000
LREF  =  1328.0000 IN.      YMRP  =       .0000 IN.                                     GP2    =       .000   GY2    =    -3.500
BREF  =  1328.0000 IN.      ZMRP  =    400.0000 IN.                                     GP3    -       .000   GY3    =     3.500
SCALE =      .0190 SCALE                                                                GP4    =       .000   GP5    =      .000

MACH  ( 1) =      .903    ALPHA ( 1) =    -6.140

 SECTION ( 1)ORBITER WING                     DEPENDENT VARIABLE CP

ETA           .2990    .4270    .5340    .6730    .7800    .8870

  X/C
    .050                                 -.5860            -.7010
    .400                 .0120           -.2030
    .550     .0000              -.2270
    .600                                                   -.4580
    .700                                 -.5340
    .750     .0000              -.5380            .0000
    .800                -.4400
    .850                                 -.2360
    .900                        -.1300                     - 1170
    .950     .0000                       -.0410

MACH  ( 1) =      .903    ALPHA ( 2) =    -4.040

 SECTION ( 1)ORBITER WING                     DEPENDENT VARIABLE CP

ETA           .2990    .4270    .5340    .6730    .7800    .8870

  X/C
    .050                                 -.4820            -.5260
    .400                 .0400           -.1590
    .550     .0000              -.1950
    .600                                                   -.4230
    .700                                 -.5140
    .750     .0000              -.5210            .0000
    .800                -.4380
    .850                                 -.2290
    .900                        -.1240                     -.0850
    .950     .0000                       -.0360
```

```
                                        CAL T14-053 IA36 01 T1 S1  LOWER WING  POWER OFF          (LUF119)

MACH  ( 1) =      .901    ALPHA ( 3) =   -2.050

 SECTION ( 1)ORBITER WING                     DEPENDENT VARIABLE CP

ETA          .2930   .4270   .5340   .6730   .7800   .8870

  X/C
    .050                             -.0800          -.2900
    .400             .0570           -.1290
    .550     .0000           -.1840
    .600                                             -.4120
    .700                             -.4910
    .750     .0000           -.5190           .0000
    .800            -.4390
    .850                             -.2050
    .900                     -.1050                  -.1010
    .950     .0000                   -.0340

MACH  ( 1) =      .904    ALPHA ( 4) =     .010

 SECTION ( 1)ORBITER WING                     DEPENDENT VARIABLE CP

ETA          .2990   .4270   .5340   .6730   .7800   .8870

  X/C
    .050                             -.0170          -.1070
    .400             .0790           -.0880
    .550     .0000           -.1660
    .600                                             -.3740
    .700                             -.4690
    .750     .0000           -.4990           .0000
    .800            -.4420
    .850                             -.2690
    .900                     -.1020                  -.3090
    .950     .0000                   -.0230

MACH  ( 1) =      .902    ALPHA ( 5) =    2.010

 SECTION ( 1)ORBITER WING                     DEPENDENT VARIABLE CP

ETA          .2990   .4270   .5340   .6730   .7800   .8870

  X/C
    .050                              .1210           .0370
    .400             .0880           -.0410
    .550     .0000           -.1350
    .600                                             -.3380
    .700                             -.4410
    .750     .0000           -.4650           .0000
    .800            -.4350
    .850                             -.4350
    .900                     -.1660                  -.4350
```

```
DATE 05 NOV 75             TABULATED DATA FOR CAL T14-053 (IA36)

                                    CAL T14-053 IA36 O1 T1 S1  LOWER WING  POWER OFF              (LUF119)

MACH  ( 1) =      .902    ALPHA ( 5) =     2.010

 SECTION ( 1)ORBITER WING                        DEPENDENT VARIABLE CP

ETA           .2990   .4270   .5340   .6730   .7800   .8870

  X/C
   .950     .0000                    -.1360
MACH  ( 1) =      .903    ALPHA ( 6) =     4.000

 SECTION ( 1)ORBITER WING                        DEPENDENT VARIABLE CP

ETA           .2990   .4270   .5340   .6730   .7800   .8870

  X/C
   .050                               .2130            .1630
   .400             .1200            -.0060
   .550     .0000           -.1140
   .600                                               -.2940
   .700                              -.3970
   .750     .0000           -.4310            .0000
   .800            -.4410
   .850                              -.4500
   .900                     -.2150                    -.4430
   .950     .0000                    -.2100
MACH  ( 1) =      .905    ALPHA ( 7) =     6.020

 SECTION ( 1)ORBITER WING                        DEPENDENT VARIABLE CP

ETA           .2990   .4270   .5340   .6730   .7800   .8870

  X/C
   .050                               .2890            .2630
   .400             .1360             .0280
   .550     .0000           -.0800
   .600                                               -.[illegible]460
   .700                              -.3590
   .750     .0000           -.4030            .0000
   .800            -.4380
   .850                              -.5130
   .900                     -.3560                    -.4960
   .950     .0000                    -.2880
```

DATE 05 NOV 75 TABULATED DATA FOR CAL T14-053 (IA36)

CAL T14-053 IA36 01 T1 S1 LOWER WING POWER OFF (LUF119)

MACH (1) = .902 ALPHA (8) = 7.990

SECTION (1)ORBITER WING DEPENDENT VARIABLE CP

ETA	.2990	.4270	.5340	.6730	.7800	.8870
X/C						
.050				.3600		.3390
.400		.1320		.0730		
.550	.0000		-.0700			
.600						-.2080
.700				-.3390		
.750	.0000		-.3980		.0000	
.800		-.4620				
.850				-.5930		
.900			-.5410			-.5730
.950	.0000			-.5160		

```
DATE 05 NOV 75             TABULATED DATA FOR CAL T14-053 (IA36)                                                        PAGE  574

                                       CAL T14-053 IA36 O1 T1 S1  LOWER WING  POWER OFF                (LUF120)   ( 03 OCT 73

                REFERENCE DATA                                                                            PARAMETRIC DATA

SREF  =  2690.0000 SQ.FT.   XMRP  =    953.0000 IN.                                       ALPHA   =       .000   GP1     =       .000
LREF  =  1328.0000 IN.      YMRP  =       .0000 IN.                                       GP2     =       .000   GY2     =    -3.500
BREF  =  1328.0000 IN.      ZMRP  =    400.0000 IN.                                       GP3     =       .000   GY3     =     3.500
SCALE =      .0190 SCALE                                                                  GP4     =       .000   GP5     =       .000

MACH  ( 1) =      .904    BETA  ( 1) =   -8.030

 SECTION ( 1)ORBITER WING                    DEPENDENT VARIABLE CP

ETA            .2990   .4270   .5340   .6730   .7800   .8870

  X/C
   .050                                -.5100          -.4800
   .400                -.1930          -.2580
   .550        .0000           -.3160
   .600                                                -.4490
   .700                                -.4990
   .750        .0000           -.4420          .0000
   .800                -.3200
   .850                                -.3630
   .900                        -.1750                  -.1160
   .950        .0000                   -.0270
MACH  ( 1) =      .903    BETA  ( 2) =   -6.070

 SECTION ( 1)ORBITER WING                    DEPENDENT VARIABLE CP

ETA            .2990   .4270   .5340   .6730   .7800   .8870

  X/C
   .050                                -.2280          -.3380
   .400                -.1500          -.2200
   .550        .0000           -.2980
   .600                                                -.4440
   .700                                -.5180
   .750        .0000           -.4930          .0000
   .800                -.3550
   .850                                -.3090
   .900                        -.1500                  -.1310
   .950        .0000                   -.0270
```

```
                                       CAL T14-053 IA36 01 T1 S1  LOWER WING  POWER OFF                (LUF120)

MACH  ( 1) =     .901    BETA  ( 3) =   -4.040

 SECTION ( 1)ORBITER WING                  DEPENDENT VARIABLE CP

ETA         .2990   .4270   .5340   .6730   .7800   .8870

  X/C
    .050                           -.1210          -.2640
    .400           -.1070          -.1930
    .550    .0000          -.2770
    .600                                           -.4280
    .700                           -.5280
    .750    .0000          -.5270           .0000
    .800           -.4030
    .850                           -.2460
    .900                   -.1310                  -.1550
    .950    .0000                  -.0260
MACH  ( 1) =     .903    BETA  ( 4) =   -3.040

 SECTION ( 1)ORBITER WING                  DEPENDENT VARIABLE CP

ETA         .2990   .4270   .5340   .6730   .7800   .8870

  X/C
    .050                           -.0970          -.2390
    .400           -.0990          -.1760
    .550    .0000          -.2630
    .600                                           -.4150
    .700                           -.5200
    .750    .0000          -.5290           .0000
    .800           -.4130
    .850                           -.2230
    .900                   -.1150                  -.2370
    .950    .0000                  -.0230
MACH  ( 1) =     .902    BETA  ( 5) =   -2.030

 SECTION ( 1)ORBITER WING                  DEPENDENT VARIABLE CP

ETA         .2390   .4270   .5340   .6730   .7800   .8870

  X/C
    .050                           -.1030          -.2120
    .400           -.0790          -.1580
    .550    .0000          -.2550
    .600                                           -.4090
    .700                           -.5130
    .750    .0000          -.5370           .0000
    .800           -.4170
    .850                           -.2050
    .900                   -.1040                  -.3110
```

```
                                        CAL T14-053 IA36 01 T1 S1  LOWER WING  POWER OFF              (LUF120)

MACH  ( 1) =     .902    BETA  ( 5) =   -2.030

 SECTION ( 1)ORBITER WING                         DEPENDENT VARIABLE CP

ETA          .2990   .4270   .5340   .6730   .7800   .8870

  X/C
   .950     .0000                   -.0340

MACH  ( 1) =     .904    BETA  ( 6) =     .000

 SECTION ( 1)ORBITER WING                         DEPENDENT VARIABLE CP

ETA          .2990   .4270   .5340   .6730   .7800   .8870

  X/C
   .050                             -.0070          -.0940
   .400             .0830           -.0870
   .550     .0000           -.1540                  -.3650
   .600
   .700                             -.4620
   .750     .0000           -.4860           .0000
   .800            -.4340
   .850                             -.2520
   .900                     -.100r                  -.3010
   .950     .0000                   -.0180

MACH  ( 1) =     .901    BETA  ( 7) =    2.030

 SECTION ( 1)ORBITER WING                         DEPENDENT VARIABLE CP

ETA          .2990   .4270   .5340   .6730   .7800   .8870

  X/C
   .050                              .0870          -.0560
   .400             .1230           -.0560
   .550     .0000           -.1290                  -.3490
   .600
   .700                             -.4460
   .750     .0000           -.4760           .0000
   .800            -.4320
   .850                             -.4640
   .900                     -.1050                  -.3170
   .950     .0000                   -.0010
```

```
                                     CAL T14-053 IA36 01 T1 S1  LOWER WING  POWER OFF                (LUF120)

MACH  ( 1) =      .901    BETA  ( 8) =     3.040

 SECTION ( 1)ORBITER WING                            DEPENDENT VARIABLE CP

ETA          .2990   .4270   .5340   .6730   .7800   .8870

  X/C
    .050                              .1070           -.0250
    .400             .1340           -.0450
    .550     .0000           -.1160
    .600                                              -.3420
    .700                             -.4410
    .750     .0000           -.4770           .0000
    .800            -.4390
    .850                             -.4890
    .900                     -.1210                   -.3310
    .950     .0000                   -.0290

MACH  ( 1) =      .904    BETA  ( 9) =     4.040

 SECTION ( 1)ORBITER WING                            DEPENDENT VARIABLE CP

ETA          .2990   .4270   .5340   .6730   .7800   .8870

  X/C
    .050                              .1360           -.0020
    .400             .1460           -.0270
    .550     .0000           -.1080
    .600                                              -.3340
    .700                             -.4290
    .750     .0000           -.4660           .0000
    .800            -.4530
    .850                             -.4150
    .900                     -.1410                   -.3620
    .950     .0000                   -.1000

MACH  ( 1) =      .902    BETA  (10) =     6.070

 SECTION ( 1)ORBITER WING                            DEPENDENT VARIABLE CP

ETA          .2990   .4270   .5340   .6730   .7800   .8870

  X/C
    .050                              .1730            .0370
    .400             .1710           -.0050
    .550     .0000           -.0910
    .600                                              -.3150
    .700                             -.4180
    .750     .0000           -.4610           .0000
    .800            -.4760
    .850                             -.4060
    .900                     -.1670                   -.3990
```

```
DATE 05 NOV 75            TABULATED DATA FOR CAL T14-053 (IA36)

                                    CAL T14-053 IA36 01 T1 S1  LOWER WING  POWER OFF          (LUF120)

MACH  ( 1) =      .902    BETA  (10) =     6.070

 SECTION ( 1)ORBITER WING                        DEPENDENT VARIABLE CP

ETA           .2990   .4270   .5340   .6730   .7800   .8870

  X/C
   .950    .0000                    -.1310

MACH  ( 1) =      .900    BETA  (11) =     8.100

 SECTION ( 1)ORBITER WING                        DEPENDENT VARIABLE CP

ETA           .2990   .4270   .5340   .6730   .7800   .8870

  X/C
    .050                                   .2220           .0680
    .400                  .1880            .0130
    .550      .0000              -.0820
    .600                                                  -.2990
    .700                                  -.4090
    .750      .0000              -.4570           .0000
    .800                 -.5280
    .850                                  -.4020
    .900                         -.2000                   -.4020
    .950      .0000                       -.1540
```

```
                                   CAL T14-053 IA36 J2 T1 S1  UPPER WING  POWER OFF            (UUF015)   ( 09 OCT 73  )

                REFERENCE DATA                                                                   PARAMETRIC DATA

SREF  =  2690.0000 SQ.FT.   XMRP  =   953.0000 IN.                                     BETA   =      .000   GP1    =    11.000
LREF  =  1328.0000 IN.      YMRP  =      .0000 IN.                                     GY1    =    -9.000   GY2    =    -9.000
BREF  =  1328.0000 IN.      ZMRP  =   400.0000 IN.                                     GY3    =    -9.000
SCALE =      .0190 SCALE

MACH  ( 1) =     .903    ALPHA ( 1) =   -7.760

 SECTION ( 1)ORBITER WING                   DEPENDENT VARIABLE CP

ETA          .2990   .4270   .5340   .6730   .7800   .8870

  X/C
   .050     .0950            .0000   .0000           -.1740
   .250                      .0000           .0000
   .400             .0000            .0000
   .550     .0000            .0000   .0000
   .600                                              .0000
   .700                              .0000
   .725                     -.0860
   .750     .0000                            .0000
   .800             .0000
   .850                              .0000
   .900                      .0000                   .0000
   .950     .0000   .0000            .0000

MACH  ( 1) =     .901    ALPHA ( 2) =   -3.820

 SECTION ( 1)ORBITER WING                   DEPENDENT VARIABLE CP

ETA          .2990   .4270   .5340   .6730   .7800   .8870

  X/C
   .050    -.0080            .0000   .0000           -.1410
   .250                      .0000           .0000
   .400             .0000            .0000
   .550     .0000            .0000   .0000
   .600                                              .0000
   .700                              .0000
   .725                     -.0960
   .750     .0000                            .0000
   .800             .0000
   .850                              .0000
   .900                      .0000                   .0000
   .950     .0000   .0000            .0000
```

```
                                        CAL T14-053 IA36 C2 T1 S1  UPPER WING  POWER OFF            (UUF015)

MACH  ( 1) =     .903   ALPHA ( 3) =    -.010

 SECTION ( 1)ORBITER WING                      DEPENDENT VARIABLE CP

ETA          .2990   .4270   .5340   .6730   .7800   .8870

  X/C
    .050   -.0470            .0000   .0000           -.2250
    .250                     .0000           .0000
    .400             .0000           .0000
    .550    .0000            .0000   .0000
    .600                                              .0000
    .700                             .0000
    .725                    -.1170
    .750    .0000                            .0000
    .800             .0000
    .850                             .0000
    .900                     .0000                    .0000
    .950    .0000    .0000           .0000

MACH  ( 1) =     .899   ALPHA ( 4) =    3.710

 SECTION ( 1)ORBITER WING                      DEPENDENT VARIABLE CP

ETA          .2990   .4270   .5340   .6730   .7800   .8870

  X/C
    .050   -.1030            .0000   .0000           -.2600
    .250                     .0000           .0000
    .400             .0000           .0000
    .550    .0000            .0000   .0000
    .600                                              .0000
    .700                             .0000
    .725                    -.1090
    .750    .0000                            .0000
    .800             .0000
    .850                             .0000
    .900                     .0000                    .0000
    .950    .0000    .0000           .0000

MACH  ( 1) =     .901   ALPHA ( 5) =    7.670

 SECTION ( 1)ORBITER WING                      DEPENDENT VARIABLE CP

ETA          .2990   .4270   .5340   .6730   .7800   .8870

  X/C
    .050   -.1410            .0000   .0000           -.5330
    .250                     .0000           .0000
    .400             .0000           .0000
    .550    .0000            .0000   .0000
    .600                                              .0000
```

```
                                   CAL T14-053 IA36 02 T1 S1  UPPER WING  POWER OFF            (UUFC15)

MACH  ( 1) =     .901    ALPHA ( 5) =    7.670

 SECTION ( 1)ORBITER WING                    DEPENDENT VARIABLE CP

ETA          .2990   .4270   .5340   .6730   .7800   .8870

  X/C
    .700                             .0000
    .725                    -.2710
    .750     .0000                           .0000
    .800             .0000
    .850                             .0000
    .900                     .0000                   .0000
    .950     .0000   .0000           .0000
```

```
                                   CAL T14-C53 IA35 02 T1 S1  UPPER WING  POWER OFF          (UUF018)   ( 09 OCT 73  )

              REFERENCE DATA                                                                  PARAMETRIC DATA

SREF  =  2690.0000 SQ.FT.   XMRP  =   953.0000 IN.                           BETA    =     .000   GP1    =    11.000
LREF  =  1328.0000 IN.      YMRP  =      .0000 IN.                           GY1     =   -9.000   GY2    =    -9.000
BREF  =  1328.0000 IN.      ZMRP  =   400.0000 IN.                           GY3     =   -9.000
SCALE =      .0190 SCALE

MACH  ( 1) =    1.201    ALPHA ( 1) =   -8.100

 SECTION ( 1)ORBITER WING                    DEPENDENT VARIABLE CP

ETA          .2990    .4270    .5340    .6730    .7800    .8870

  X/C
    .050   -.1180             .0000    .0000             .2570
    .250                      .0000             .0000
    .400            .0000              .0000
    .550    .0000             .0000    .0000
    .600                                                  .0000
    .700                               .0000
    .725                     -.1210
    .750    .0000                               .0000
    .800            .0000
    .850                               .0000
    .900                      .0000                       .0000
    .950    .0000   .0000              .0000

MACH  ( 1) =    1.203    ALPHA ( 2) =   -6.120

 SECTION ( 1)ORBITER WING                    DEPENDENT VARIABLE CP

ETA          .2990    .4270    .5340    .6730    .7800    .8870

  X/C
    .050   -.1370             .0000    .0000             .2420
    .250                      .0000             .0000
    .400            .0000              .0000
    .550    .0000             .0000    .0000
    .600                                                  .0000
    .700                               .0000
    .725                     -.1280
    .750    .0000                               .0000
    .800            .0000
    .850                               .0000
    .900                      .0000                       .0000
    .950    .0000   .0000              .0000
```

```
                                   CAL T14-053 IA36 02 T1 S1  UPPER WING  POWER OFF          (UUF018)

MACH  ( 1) =    1.202    ALPHA ( 3) =   -4.090

 SECTION ( 1)ORBITER WING                    DEPENDENT VARIABLE CP

ETA         .2990     .4270     .5340     .6730     .7800     .8870

  X/C
    .050   -.1490               .0000     .0000               .1640
    .250                        .0000               .0000
    .400              .0000               .0000
    .550    .0000               .0000     .0000
    .600                                                      .0000
    .700                                  .0000
    .725                       -.1410
    .750    .0000                                   .0000
    .800              .0000
    .850                                  .0000
    .900                        .0000                         .0000
    .950    .0000     .0000               .0000
```

```
                                    CAL T14-053 IA36 02 T1 S1  UPPER WING  POWER OFF               (UUF019)   ( 09 OCT 73  )

              REFERENCE DATA                                                                         PARAMETRIC DATA

SREF  =  2690.0000 SQ.FT.   XMRP  =    953.0000 IN.                                       BETA   =      .000   GP1    =    11.000
LREF  =  1328.0000 IN.      YMRP  =       .0000 IN.                                       GY1    =    -9.000   GY2    =    -9.000
BREF  =  1328.0000 IN.      ZMRP  =    400.0000 IN.                                       GY3    =    -9.000
SCALE =      .0190 SCALE

MACH  ( 1) =     .904   ALPHA ( 1) =   -8.100

 SECTION ( 1)ORBITER WING                  DEPENDENT VARIABLE CP

ETA         .2990   .4270   .5340   .6730   .7800   .8870

  X/C
    .050    .0920           .0000   .0000           .1780
    .250                    .0000           .0000
    .400            .0000           .0000
    .550    .0000           .0000   .0000
    .600                                            .0000
    .700                            .0000
    .725                   -.0920
    .750    .0000                           .0000
    .800            .0000
    .850                            .0000
    .900                    .0000                   .0000
    .950    .0000   .0000           .0000
MACH  ( 1) =     .901   ALPHA ( 2)     -6.090

 SECTION ( 1)ORBITER WING                  DEPENDENT VARIABLE CP

ETA         .2990   .4270   .5340   .6730   .7800   .8870

  X/C
    .050    .0610           .0000   .0000           .0790
    .250                    .0000           .0000
    .400            .0000           .0000
    .550    .0000           .0000   .0000
    .600                                            .0000
    .700                            .0000
    .725                   -.0850
    .750    .0000                           .0000
    .800            .0000
    .850                            .0000
    .900                    .0000                   .0000
    .950    .0000   .0000           .0000
```

```
                                       CAL T14-053 IA36 02 T! S1  UPPER WING  POWER OFF              (UUF019)

MACH  ( 1) =      .901    ALPHA ( 3) =    -4.090

 SECTION ( 1)ORBITER WING                      DEPENDENT VARIABLE CP

ETA         .2990     .4270     .5340     .6730     .7800     .8870

  X/C
    .050    .0170               .0000     .0000               -.0360
    .250                        .0000               .0000
    .400              .0000               .0000
    .550    .0000               .0000     .0000
    .600                                                      .0000
    .700                                  .0000
    .725                       -.1460
    .750    .0000                                   .0000
    .800              .0000
    .850                                  .0000
    .900                        .0000                         .0000
    .950    .0000     .0000               .0000

MACH  ( 1) =      .902    ALPHA ( 4) =      .010

 SECTION ( 1)ORBITER WING                      DEPENDENT VARIABLE CP

ETA         .2990     .4270     .5340     .6730     .7800     .8870

  X/C
    .050   -.0310               .0000     .0000               -.3470
    .250                        .0000               .0000
    .400              .0000               .0000
    .550    .0000               .0000     .0000
    .600                                                      .0000
    .700                                  .0000
    .725                       -.0700
    .750    .0000                                   .0000
    .800              .0000
    .850                                  .0000
    .900                        .0000                         .0000
    .950    .0000     .0000               .0000

MACH  ( 1) =      .902    ALPHA ( 5) =     2.010

 SECTION ( 1)ORBITER WING                      DEPENDENT VARIABLE CP

ETA         .2390     .4270     .5340     .6730     .7800     .8870

  X/C
    .050   -.0660               .0000     .0000               -.4820
    .250                        .0000               .0000
    .400              .0000               .0000
    .550    .0000               .0000     .0000
    .600                                                      .0000
```

```
MACH  ( 1) =      .902    ALPHA ( 5) =     2.010

 SECTION ( 1)ORBITER WING                    DEPENDENT VARIABLE CP

ETA           .2990     .4270     .5340     .6730     .7800     .8870

  X/C
    .700                                    .0000
    .725                         -.1020
    .750      .0000                                   .0000
    .800                .0000
    .850                                    .0000
    .900                          .0000                         .0000
    .950      .0000     .0000               .0000
MACH  ( 1) =      .901    ALPHA ( 6) =     4.030

 SECTION ( 1)ORBITER WING                    DEPENDENT VARIABLE CP

ETA           .2990     .4270     .5340     .6730     .7800     .8870

  X/C
    .050     -.0760               .0000     .0000              -.6010
    .250                          .0000               .0000
    .400                .0000               .0000
    .550      .0000               .0000     .0000
    .600                                                        .0000
    .700                                    .0000
    .725                         -.0630
    .750      .0000                                   .0000
    .800                .0000
    .850                                    .0000
    .900                          .0000                         .0000
    .950      .0000     .0000               .0000
MACH  ( 1) =      .905    ALPHA ( 7) =     6.020

 SECTION ( 1)ORBITER WING                    DEPENDENT VARIABLE CP

ETA           .2990     .4270     .5340     .6730     .7800     .8870

  X/C
    .050     -.1020               .0000     .0000              -.7120
    .250                          .0000               .0000
    .400                .0000               .0000
    .550      .0000               .0000     .0000
    .600                                                        .0000
    .700                                    .0000
    .725                         -.1480
    .750      .0000                                   .0000
    .800                .0000
    .850                                    .0000
```

```
                                          CAL T14-053 IA36 02 T1 S1  UPPER WING  POWER OFF            (UUF019)

MACH  ( 1) =     .905   ALPHA ( 7) =    6.020

 SECTION ( 1)ORBITER WING                        DEPENDENT VARIABLE CP

ETA          .2990   .4270   .5340   .6730   .7800   .8870

  X/C
    .900                     .0000                   .0000
    .950     .0000   .0000           .0000

MACH  ( 1) =     .901   ALPHA ( 8) =    7.990

 SECTION ( 1)ORBITER WING                        DEPENDENT VARIABLE CP

ETA          .2990   .4270   .5340   .6730   .7800   .8870

  X/C
    .050    -.1290           .0000   .0000          -.8520
    .250                     .0000           .0000
    .400             .0000           .0000
    .550     .0000           .0000   .0000
    .600                                             .0000
    .700                             .0000
    .725                    -.2360
    .750     .0000                           .0000
    .800             .0000
    .850                             .0000
    .900                     .0000                   .0000
    .950     .0000   .0000           .0000
```

```
DATE 05 NOV 75          TABULATED DATA FOR CAL T14-053 (IA36)                                                PAGE  588

                                      CAL T14-053 IA36 02 T1 S1  UPPER WING  POWER OFF              (UUF020)   ( 09 OCT 73  )

                 REFERENCE DATA                                                                          PARAMETRIC DATA

SREF  =  2690.0000 SQ.FT.   XMRP  =   953.0000 IN.                                   ALPHA  =      .000   GP1    =     11.000
LREF  =  1328.0000 IN.      YMRP  =      .0000 IN.                                   GY1    =    -9.000   GY2    =     -9.000
BREF  =  1328.0000 IN.      ZMRP  =   400.0000 IN.                                   GY3    =    -9.000
SCALE =      .0190 SCALE

MACH   ( 1) =      .903    BETA   ( 1) =    -6.080

 SECTION ( 1)ORBITER WING                    DEPENDENT VARIABLE CP

ETA          .2990   .4270   .5340   .6730   .7800   .8870

  X/C
    .050   -.0420           .0000   .0000           -.2050
    .250                    .0000           .0000
    .400            .0000           .0000
    .550    .0000           .0000   .0000
    .600                                             .0000
    .700                            .0000
    .725                   -.2420
    .750    .0000                           .0000
    .800            .0000
    .850                            .0000
    .900                    .0000                    .0000
    .950    .0000   .0000           .0000

MACH   ( 1) =      .901    BETA   ( 2) =    -4.050

 SECTION ( 1)ORBITER WING                    DEPENDENT VARIABLE CP

ETA          .2990   .4270   .5340   .6730   .7800   .8870

  X/C
    .050   -.0510           .0000   .0000           -.2510
    .250                    .0000           .0000
    .400            .0000           .0000
    .550    .0000           .0000   .0000
    .600                                             .0000
    .700                            .0000
    .725                   -.2200
    .750    .0000                           .0000
    .800            .0000
    .850                            .0000
    .900                    .0000                    .0000
    .950    .0000   .0000           .0000
```

```
DATE 05 NOV 75           TABULATED DATA FOR CAL T14-053 (IA36)
                                   CAL T14-053 IA36 C2 T1 S1  UPPER WING  POWER OFF              (UUF020)

MACH  ( 1) =     .902   BETA  ( 3) =   -2.030
 SECTION ( 1)ORBITER WING                         DEPENDENT VARIABLE CP
ETA          .2990   .4270   .5340   .6730   .7800   .8870

  X/C
   .050   -.0440            .0000   .0000           -.2880
   .250                     .0000           .0000
   .400            .0000            .0000
   .550    .0000            .0000   .0000
   .600                                              .0000
   .700                             .0000
   .725                    -.1350
   .750    .0000                            .0000
   .800            .0000
   .850                             .0000
   .900                     .0000                    .0000
   .950    .0000   .0000            .0000
MACH  ( 1) =     .900   BETA  ( 4) =     .000
 SECTION ( 1)ORBITER WING                         DEPENDENT VARIABLE CP
ETA          .2990   .4270   .5340   .6730   .7800   .8870

  X/C
   .050   -.0410            .0000   .0000           -.3250
   .250                     .0000           .0000
   .400            .0000            .0000
   .550    .0000            .0000   .0000
   .600                                              .0000
   .700                             .0000
   .725                    -.1160
   .750    .0000                            .0000
   .800            .0000
   .850                             .0000
   .900                     .0000                    .0000
   .950    .0000   .0000            .0000
MACH  ( 1) =     .901   BETA  ( 5) =    4.050
 SECTION ( 1)ORBITER WING                         DEPENDENT VARIABLE CP
ETA          .2990   .4270   .5340   .6730   .7800   .8870

  X/C
   .050   -.0330            .0000   .0000           -.3700
   .250                     .0000           .0000
   .400            .0000            .0000
   .550    .0000            .0000   .0000
   .600                                              .0000
```

```
                                      CAL T14-053 IA36 02 T1 S1  UPPER WING  POWER OFF           (UUF020)

MACH  ( 1) =     .901    BETA  ( 5) =    4.050

 SECTION ( 1)ORBITER WING                     DEPENDENT VARIABLE CP

ETA          .2990   .4270   .5340   .6730   .7800   .8870

  X/C
    .700                             .0000
    .725                    -.0260
    .750     .0000                           .0000
    .800             .0000
    .850                             .0000
    .900                     .0000                   .0000
    .950     .0000   .0000           .0000

MACH  ( 1) =     .899    BETA  ( 6) =    6.090

 SECTION ( 1)ORBITER WING                     DEPENDENT VARIABLE CP

ETA          .2990   .4270   .5340   .6730   .7800   .6870

  X/C
    .050    -.0430           .0000   .0000          -.3970
    .250                     .0000           .0000
    .400             .0000           .0000
    .550     .0000           .0000   .0000
    .600                                             .0000
    .700                             .0000
    .725                    -.0090
    .750     .0000                           .0000
    .800             .0000
    .850                             .0000
    .900                     .0000                   .0000
    .950     .0000   .0000           .0000
```

```
                                        CAL T14-053 IA36 02 T1 S1  UPPER WING  POWER ON                (UUF073)   ( 09 OCT 73  )

                 REFERENCE DATA                                                                   PARAMETRIC DATA

SREF  =  2690.0000 SQ.FT.   XMRP  =   953.0000 IN.                                    BETA    =      .000  OPR    =    28.310
LREF  =  1328.0000 IN.      YMRP  =      .0000 IN.                                    SRMPR   =     2.020  GP1    =    11.000
BREF  =  1328.0000 IN.      ZMRP  =   400.0000 IN.                                    GY1     =    -9.000  GP2    =      .000
SCALE =      .0190 SCALE                                                              GY2     =    -9.000  GP3    =      .000
                                                                                      GY3     =    -9.000

MACH  ( 1) =     .901    ALPHA ( 1) =   -8.010

 SECTION ( 1)ORBITER WING                  DEPENDENT VARIABLE CP

ETA          .2990   .4270   .5340   .6730   .7800   .8870

  X/C
    .050     .1000           .0000   .0000           .1100
    .250                     .0000           .0000
    .400             .0000           .0000
    .550     .0000           .0000   .0000
    .600                                             .0000
    .700                             .0000
    .725                    -.1080
    .750     .0000                           .0000
    .800             .0000
    .850                             .0000
    .900                     .0000                   .0000
    .950     .0000   .0000           .0000

MACH  ( 1) =     .902    ALPHA ( 2) =   -4.040

 SECTION ( 1)ORBITER WING                  DEPENDENT VARIABLE CP

ETA          .2990   .4270   .5340   .6730   .7800   .8870

  X/C
     050     .0420           .0000   .0000          -.0800
    .250                     .0000           .0000
    .400             .0000           .0000
    .550     .0000           .0000   .0000
    .600                                             .0000
    .700                             .0000
    .725                    -.1000
    .750     .0000                           .0000
    .800             .0000
    .850                             .0000
    .900                     .0000                   .0000
    .950     .0000   .0000           .0000
```

```
                     CAL T14-053 IA36 02 T1 S1  UPPER WING  POWER ON            (UUF073)

MACH  ( 1) =     .901   ALPHA ( 3) =     .000

 SECTION ( 1)ORBITER WING                 DEPENDENT VARIABLE CP

ETA         .2990   .4270   .5340   .6730   .7800   .8870

  X/C
    .050   -.0190           .0000   .0000           -.3270
    .250                    .0000           .0000
    .400            .0000           .0000
    .550    .0000           .0000   .0000
    .600                                             .0000
    .700                            .0000
    .725                   -.1100
    .750    .0000                           .0000
    .800            .0000
    .850                            .0000
    .900                    .0000                    .0000
    .950    .0000   .0000           .0000
MACH  ( 1) =     .905   ALPHA ( 4) =    4.040

 SECTION ( 1)ORBITER WING                 DEPENDENT VARIABLE CP

ETA         .2990   .4270   .5340   .6730   .7800   .8870

  X/C
    .050   -.0640           .0000   .0000           -.4790
    .250                    .0000           .0000
    .400            .0000           .0000
    .550    .0000           .0000   .0000
    .600                                             .0000
    .700                            .0000
    .725                   -.0790
    .750    .0000                           .0000
    .800            .0000
    .850                            .0000
    .900                    .0000                    .0000
    .950     0000   .0000           .0000
MACH  ( 1) =     .902   ALPHA ( 5) =    6.020

 SECTION ( 1)ORBITER WING                 DEPENDENT VARIABLE CP

ETA         .2990   .4270   .5340   .6730   .7800   .8870

  X/C
    .050   -.0920           .0000   .0000           -.6760
    .250                    .0000           .0000
    .400            .0000           .0000
    .550    .0000           .0000   .0000
    .600                                             .0000
```

```
DATE 05 NOV 75            TABULATED DATA FOR CAL T14-053 (IA36)                                              PAGE  693
                                         CAL T14-053 IA36 02 T1 S1  UPPER WING  POWER ON              (UUF073)

MACH  ( 1) =     .902   ALPHA ( 5) =    6.020

 SECTION ( 1)ORBITER WING                    DEPENDENT VARIABLE CP

ETA          .2990   .4270   .5340   .6730   .7800   .8870

  X/C
    .700                             .0000
    .725                    -.1330
    .750     .0000                           .0000
    .800             .0000
    .850                             .0000
    .900                     .0000                   .0000
    .950     .0000   .0000           .0000
```

```
                                   CAL T14-053 IA36 02 T1 S1  UPPER WING  POWER ON                 (UUF077)   ( 09 OCT 73  )

              REFERENCE DATA                                                                   PARAMETRIC DATA

SREF  =  2690.0000 SQ.FT.   XMRP  =   953.0000 IN.                                   BETA    =     .000   OPR    =    36.200
LREF  =  1328.0000 IN.      YMRP  =      .0000 IN.                                   SRMPR   =    2.330   GP1    =    11.000
BREF  =  1328.0000 IN.      ZMRP  =   400.0000 IN.                                   GY1     =   -9.000   GP2    =      .000
SCALE =      .0190 SCALE                                                             GY2     =   -9.000   GP3    =      .000
                                                                                     GY3     =   -9.000

MACH  ( 1) =     1.206    ALPHA ( 1) =    -8.040

 SECTION ( 1)ORBITER WING                    DEPENDENT VARIABLE CP

ETA           .2990   .4270   .5340   .6730   .7800   .8870

  X/C
    .050    -.0870           .0000   .0000           .2540
    .250                     .0000           .0000
    .400             .0000           .0000
    .550     .0000           .0000   .0000
    .600                                             .0000
    .700                             .0000
    .725                    -.0840
    .750     .0000                           .0000
    .800             .0000
    .850                             .0000
    .900                     .0000                   .0000
    .950     .0000   .0000           .0000

MACH  ( 1) =     1.205    ALPHA ( 2) =    -4.010

 SECTION ( 1)ORBITER WING                    DEPENDENT VARIABLE CP

ETA           .2990   .4270   .5340   .6730   .7800   .8870

  X/C
    .050    -.1210           .0000   .0000          -.0230
    .250                     .0000           .0000
    .400             .0000           .0000
    .550     .0000           .0000   .0000
    .600                                             .0000
    .700                             .0000
    .725                    -.1120
    .750     .0000                           .0000
    .800             .0000
    .850                             .0000
    .900                     .0000                   .0000
    .950     .0000   .0000           .0000
```

```
                                   CAL T14-053 IA36 02 T1 S1  UPPER WING  POWER ON           (UUF077)

MACH  ( 1) =    1.202   ALPHA ( 3) =     .020

 SECTION ( 1)ORBITER WING                 DEPENCENT VARIABLE CP

ETA        .2990   .4270   .5340   .6730   .7800   .8870

  X/C
    .050  -.1470           .0000   .0000          -.1760
    .250                   .0000           .0000
    .400           .0000           .0000
    .550   .0000           .0000   .0000
    .600                                           .0000
    .700                           .0000
    .725                  -.1390
    .750   .0000                           .0000
    .800           .0000
    .850                           .0000
    .900                   .0000                   .0000
    .950   .0000   .0000           .0000

MACH  ( 1) =    1.193   ALPHA ( 4) =    4.050

 SECTION ( 1)ORBITEP WING                 DEPENDENT VARIABLE CP

ETA        .2990   .4270   .5340   .6730   .7800   .8870

  X/C
    .050  -.1840           .0000   .0000          -.2220
    .250                   .0000           .000C
    .400           .0000           .0000
    .550   .0000           .0000   .0000
    .600                                           .0000
    .700                           .0000
    .725                  -.2190
    .750   .0000                           .0000
    .800           .0000
    .850                           .0000
    .900                   .0000                   .0000
    .950   .0000   .0000           .0000

MACH  ( 1) =    1.204   ALPHA ( 5) =    6.050

 SECTION ( 1)ORBITER WING                 DEPENDENT VARIABLE CP

ETA        .2990   .4270   .5340   .6730   .7800   .8870

  X/C
    .050  -.1790           .0000   .0000          -.2710
    .250                   .0000           .0000
    .400           .0000           .0000
    .550   .0000           .0000   .0000
    .600                                           .0000
```

```
                                  CAL T14-053 IA36 02 T1 S1  UPPER WING  POWER ON              (UUF077)

MACH  ( 1) =    1.204    ALPHA ( 5) =    6.050

 SECTION ( 1)ORBITER WING                    DEPENDENT VARIABLE CP

ETA          .2990    .4270    .5340    .6730    .7800    .8870

  X/C
    .700                                .0000
    .725                      -.2690
    .750     .0000                               .0000
    .800              .0000
    .850                                .0000
    .900                       .0000                      .0000
    .950     .0000    .0000             .0000
```

```
DATE 05 NOV 75            TABULATED DATA FOR CAL T14-053 (IA36)                                           (UUF081)   ( 09 OCT 73  )
                                  CAL T14-053 IA36 01 T1 S1  UPPER WING  POWER OFF
                                                                                                        PARAMETRIC DATA
                 REFERENCE DATA
                                                                                          BETA   =     .000   GP1    =     .000
SREF  =  2690.0000 SQ.FT.   XMRP  =   953.0000 IN.                                        CY1    =     000    GP2    =     .000
LREF  =  1328.0000 IN.      YMRP  =      .0000 IN.                                        GY2    =   -3.500   GP3    =     .000
BREF  =  1328.0000 IN.      ZMRP  =   400.0000 IN.                                        GY3    =    3.500   RUDDER =     .000
SCALE =      .0190 SCALE

MACH  ( 1) =    1.205    ALPHA ( 1) =   -8.110
 SECTION ( 1)ORBITER WING                       DEPENDENT VARIABLE CP

ETA          .2990    .4270    .5340    .6730    .7800    .8870

  X/C
    .050     .0000             .3100    .3350             .3280
    .250                      -.0710             .0000
    .400              -.0360            -.1440
    .550     .0000             .0080    -.0430            -.1720
    .600                                                  
    .700                                -.1640
    .725                      -.1240
    .750     .0000                               .0000
    .800              -.0830
    .850                                -.1380
    .900                      -.0080                      -.0080
    .950     .0000     .0730             .0460
MACH  ( 1) =    1.201    ALPHA ( 2) =   -4.070
 SECTION ( 1)ORBITER WING                       DEPENDENT VARIABLE CP

ETA          .2990    .4270    .5340    .6730    .7800    .8870

  X/C
    .050     .0030             .1700    .1780             .1780
    .250                      -.1840             .0000
    .400              -.1960            -.3470
    .550     .0000            -.0800    -.2150
    .600                                                  -.4170
    .700                                -.2040
    .725                      -.1630
    .750     .0000                               .0000
    .800              -.1250
    .850                                -.1600
    .900                      -.0700                      -.0170
    .950     .0000    -.0060             .0140
```

```
                                     CAL T14-053 IA36 01 T1 S1  UPPER WING  POWER OFF            (UUF081)

MACH  ( 1) =    1.204    ALPHA ( 3) =     .050

 SECTION ( 1)ORBITER WING                    DEPENDENT VARIABLE CP

ETA          .2990   .4270   .5340   .6730   .7800   .8870

  X/C
    .050     .0000           .0330  -.0110           .0000
    .250                    -.2940           .0000
    .400            -.2890          -.4720
    .550     .0000          -.3060  -.4780
    .600                                            -.4810
    .700                            -.3150
    .725                    -.1890
    .750     .0000                           .0000
    .800            -.1540
    .850                            -.1620
    .900                    -.1100                  -.2330
    .950     .0000  -.0390          -.0440

MACH  ( 1) =    1.202    ALPHA ( 4) =    4.020

 SECTION ( 1)ORBITER WING                    DEPENDENT VARIABLE CP

ETA          .2990   .4270   .5340   .6730   .7800   .8870

  X/C
    .050     .0000          -.1830  -.2120          -.1770
    .250                    -.4070           .0000
    .400            -.3450          -.6000
    .550     .0000          -.4400  -.5780
    .600                                            -.5930
    .700                            -.5100
    .725                    -.2730
    .750     .0000                           .0000
    .900            -.1970
    .850                            -.2910
    .900                    -.1530                  -.3540
    .950     .0000  -.0700          -.1590

MACH  ( 1) =    1.198    ALPHA ( 5) =    6.000

 SECTION ( 1)ORBITER WING                    DEPENDENT VARIABLE CP

ETA          .2990   .4270   .5340   .6730   .7800   .8870

  X/C
    .050     .0000          -.2600  -.3060          -.2610
    .250                    -.5040           .0000
    .400            -.3700          -.6570
    .550     .0000          -.4850  -.637
    .600                                            -.6490
```

CAL T14-053 IA36 01 T1 S1 UPPER WING POWER OFF (UUF081)

MACH (1) = 1.198 ALPHA (5) = 6.000

SECTION (1)ORBITER WING DEPENDENT VARIABLE CP

ETA	.2990	.4270	.5340	.6730	.7800	.8870
X/C						
.700				-.5680		
.725			-.3290			
.750	.0000				.0000	
.800		-.2170				
.850				-.3520		
.900			-.1930			-.3920
.950	.0000	-.0860		-.2330		

```
                              CAL T14-053 IA36 01 T1 S1  UPPER WING  POWER OFF          (UUF082)   ( 09 OCT 73  )

            REFERENCE DATA                                                               PARAMETRIC DATA

SREF  =  2690.0000 SQ.FT.   XMRP  =    953.0000 IN.                      ALPHA  =      .000   GP1     =      .000
LREF  =  1328.0000 IN.      YMRP  =       .0000 IN.                      GY1    =      .000   CP2     =      .000
BREF  =  1328.0000 IN.      ZMRP  =    400.0000 IN.                      GY2    =    -3.500   GP3     =      .000
SCALE =      .0190 SCALE                                                 GY3    =     3.500   RUDDER  =      .000

MACH  ( 1) =    1.202    BETA  ( 1) =   -6.080

 SECTION ( 1)ORBITER WING                        DEPENDENT VARIABLE CP

ETA          .2990     .4270     .5340     .6730     .7800     .8870

 X/C
  .050       .0000               -.0230     .0210               .0050
  .250                           -.2650               .0000
  .400                 -.2770              -.4270
  .550       .0000               -.1950    -.3580
  .600                                                         -.4730
  .700                                     -.2540
  .725                           -.2310
  .750       .0000                                    .0000
  .800                 -.2230
  .850                                     -.2240
  .900                           -.1720                        -.1100
  .950       .0000     -.0850              -.1000

MACH  ( 1) =    1.203    BETA  ( 2) =   -3.050

 SECTION ( 1)ORBITER WING                        DEPENDENT VARIABLE CP

ETA          .2990     .4270     .5340     .6730     .7800     .8870

 X/C
  .050       .0000               -.0180    -.0110               .0010
  .250                           -.2860               .0000
  .400                 -.2920              -.4580
  .550       .0000               -.2410    -.4750
  .600                                                         -.4890
  .700                                     -.2780
  .725                           -.2200
  .750       .0000                                    .0000
  .800                 -.2010
  .850                                     -.2060
  .900                           -.1550                        -.1900
  .950       .0000     -.0750              -.0750
```

```
                              CAL T14-053 IA36 O1 T1 S1  UPPER WING  POWER OFF          (UUF082)

MACH  ( 1) =     1.204    BETA  ( 3) =      .000

 SECTION ( 1)ORBITER WING                      DEPENDENT VARIABLE CP

ETA          .2990     .4270     .5340     .6730     .7800     .8870

  X/C
    .050     .0000               .0250    -.0100               .0020
    .250                        -.2970               .0000
    .400              -.2900              -.4710
    .550     .0000              -.3250    -.4800
    .600                                                      -.4790
    .700                                  -.3080
    .725                        -.1880
    .750     .0000                                   .0000
    .800              -.1590
    .850                                  -.1720
    .900                        -.1060                        -.2250
    .950     .0000    -.0440              -.0480

MACH  ( 1) =     1.201    BETA  ( 4) =     3.050

 SECTION ( 1)ORBITER WING                      DEPENDENT VARIABLE CP

ETA          .2990     .4270     .5340     .6730     .7800     .8870

  X/C
    .050     .0000              -.0160    -.0260               .0010
    .250                        -.3360               .0000
    .400              -.3040              -.4960
    .550     .0000              -.3940    -.5160
    .600                                                      -.5330
    .700                                  -.3800
    .725                        -.1890
    .750     .0000                                   .0000
    .800              -.1160
    .850                                  -.1920
    .900                        -.0740                        -.3010
    .950     .0000    -.0120              -.0660

MACH  ( 1) =     1.203    BETA  ( 5) =     6.080

 SECTION ( 1)ORBITER WING                      DEPENDENT VARIABLE CP

ETA          .2990     .4270     .5340     .6730     .7800     .8870

  X/C
    .050     .0000              -.0640    -.0480               .0120
    .250                        -.3930               .0000
    .400              -.3400              -.5560
    .550     .0000              -.4290    -.5680
    .600                                                      -.5350
```

```
DATE 05 NOV 75           TABULATED DATA FOR CAL T14-053 (IA36)                                            PAGE  702
                                     CAL T14-053 IA36 01 T1 S1  UPPER WING  POWER OFF            (UUF082)

MACH  ( 1) =    1.203   BETA  ( 5) =    6.090

 SECTION ( 1)ORBITER WING                    DEPENDENT VARIABLE CP

ETA          .2990   .4270   .5340   .6730   .7800   .8870

  X/C
    .700                           -.4640
    .725                   -.2280
    .750     .0000                           .0000
    .800           -.0900
    .850                           -.2520
    .900                   -.0590                  -.3600
    .950     .0000   .0320         -.1560
```

```
DATE 05 NOV 75            TABULATED DATA FOR CAL T14-053 (IA36)                                                        PAGE  703

                                      CAL T14-053 IA36 C1 T1 S1  UPPER WING  POWER ON                (UUF083)    ( 09 OCT 73  )

              REFERENCE DATA                                                                      PARAMETRIC DATA

SREF  =  2690.0000 SQ.FT.   XMRP  =    953.0000 IN.                                   BETA    =      .000  OFB     =     36.200
LREF  =  1328.0000 IN.      YMRP  =       .0000 IN.                                   SRMPR   =     2.330  GP1     =       .000
BREF  =  1328.0000 IN.      ZMRP  =    400.0000 IN.                                   GY1     =      .000  GP2     =       .000
SCALE =      .0190 SCALE                                                              GY2     =    -3.500  GP3     =       .000
                                                                                      GY3     =     3.500  RUDDER  =       .000

MACH  ( 1) =    1.199   ALPHA ( 1) =   -8.090

 SECTION ( 1)ORBITER WING                  DEPENDENT VARIABLE CP

ETA          .2990   .4270   .5340   .6730   .7800   .8870

  X/C
    .050     .000C           .3230   .3520           .3300
    .250                    -.0540           .0000
    .400            -.0350          -.1720
    .550     .0000           .0190  -.0290
    .600                                            -.1630
    .700                            -.1540
    .725                    -.1230
    .750     .0000                           .0000
    .800            -.0650
    .850                            -.1260
    .900                    -.0030                   .0060
    .950     .0000   .0930           .0620

MACH  ( 1) =    1.196   ALPHA ( 2) =   -4.050

 SECTION ( 1)ORBITER WING                  DEPENDENT VARIABLE CP

ETA          .2990   .4270   .5340   .6730   .7800   .8870

  X/C
    .050     .0000           .1880   .2090           .1870
    .250                    -.1730           .0000
    .400            -.1710          -.3310
    .550     .0000          -.0580  -.1730
    .600                                            -.4030
    .700                            -.1900
    .725                    -.1530
    .750     .0000                           .0000
    .800            -.1070
    .850                            -.1450
    .900                    -.0500                   .0240
    .950     .0000   .0170           .0340
```

```
                              CAL T14-053 IA36 01 T1 S1  UPPER WING  POWER ON            (UUF083)
MACH  ( 1) =    1.200   ALPHA ( 3) =    -.050
 SECTION ( 1)ORBITER WING                   DEPENDENT VARIABLE CP
ETA          .2990   .4270   .5340   .6730   .7800   .8870
  X/C
   .050      .0000           .0370   .0060           .0120
   .250                     -.2820           .0000
   .400             -.2810          -.4580
   .550      .0000          -.3040  -.4750
   .600                                             -.4760
   .700                             -.2950
   .725                     -.1790
   .750      .0000                           .0000
   .800             -.1460
   .850                             -.1510
   .900                     -.0910                  -.2080
   .950      .0000  -.0250          -.0160
MACH  ( 1) =    1.196   ALPHA ( 4) =    3.990
 SECTION ( 1)ORBITER WING                   DEPENDENT VARIABLE CP
ETA          .2990   .4270   .5340   .6730   .7800   .8870
  X/C
   .050      .0000          -.1710  -.2050          -.1760
   .250                     -.3990           .0000
   .400             -.3420          -.6090
   .550      .0000          -.4370  -.5770
   .600                                             -.6000
   .700                             -.5080
   .725                     -.2660
   .750      .0000                           .0000
   .800             -.1860
   .850                             -.2820
   .900                     -.1520                  -.3860
   .950      .0000  -.0560          -.1380
MACH  ( 1) =    1.200   ALPHA ( 5) =    6.060
 SECTION ( 1)ORBITER WING                   DEPENDENT VARIABLE CP
ETA          .2990   .4270   .5340   .6730   .7800   .8870
  X/C
   .050      .0000          -.2480  -.3040          -.2550
   .250                     -.5130           .0000
   .400             -.3560          -.6600
   .550      .0000          -.4740  -.6370
   .600                                             -.6440
```

```
DATE 05 NOV 75              TABULATED DATA FOR CAL T14-053 (IA36)
                                                                                          PAGE  705
                                     CAL T14-053 IA36 O1 T1 S1  UPPER WING  POWER ON             (UUF083)
MACH  ( 1) =     1.200    ALPHA ( 5) =    6.060
 SECTION ( 1)ORBITER WING                    DEPENDENT VARIABLE CP
ETA          .2990    .4270    .5340    .6730    .7800    .8870
  X/C
   .700                                 -.5770
   .725                        -.3210
   .750      .0000                                .0000
   .800              -.2080
   .850                                 -.3420
   .900                        -.1880                     -.4260
   .950      .0000   -.0660             -.2180
```

```
                                   CAL T14-053 IA36 01 T1 S1  UPPER WING  POWER ON            (UUF084)   ( 09 OCT 73  )

              REFERENCE DATA                                                                    PARAMETRIC DATA

SPEF  =  2690.0000 SQ.FT.   XMRP  =   953.0000 IN.                              ALPHA  =      .000   OPR     =    36.200
LPEF  =  1328.0000 IN.      YMRP  =      .0000 IN.                              SRMPR  =     2.330   GP1     =      .000
BREF  =  1328.0000 IN.      ZMRP  =   400.0000 IN.                              GY1    =      .000   GP2     =      .000
SCALE =      .0190 SCALE                                                        GY2    =    -3.500   GP3     =      .000
                                                                                GY3    =     3.500   RUDDER  =      .000

MACH  ( 1) =    1.196    BETA  ( 1) =    -6.070

 SECTION ( 1)ORBITER WING                     DEPENDENT VARIABLE CP

ETA          .2990   .4270   .5340   .6730   .7800   .8870

  X/C
    .050     .0000          -.0180   0210             .0140
    .250                    -.2460           .0000
    .400            -.2690          -.4250
    .550     .0000          -.1380  -.2980
    .600                                             -.4840
    .700                            -.2500
    .725                    -.2290
    .750     .0000                           .0000
    .800            -.2160
    .850                            -.2210
    .900                    -.1870                   -.1010
    .950     .0000  -.0720          -.0740

MACH  ( 1) =    1.201    BETA  ( 2) =    -3.050

 SECTION ( 1)ORBITER WING                     DEPENDENT VARIABLE CP

ETA          .2990   .4270   .5340   .6730   .7800   .8870

  X/C
    .050     .0000          -.0060   .0160            .0130
    .250                    -.2700           .0000
    .400            -.2640          -.4410
    .550     .0000          -.1760  -.4490
    .600                                             -.4830
    .700                            -.2560
    .725                    -.2030
    .750     .0000                           .0000
    .800            -.1870
    .850                            -.1880
    .900                    -.1400                   -.1610
    .950     .0000  -.0590          -.0370
```

```
                              CAL T14-053 IA36 O1 T1 S1  UPPER WING  POWER ON              (UUF084)

MACH  ( 1) =    1.198    BETA  ( 3) =     .000

 SECTION ( 1)ORBITER WING                        DEPENDENT VARIABLE CP

ETA           .2990    .4270    .5340    .6730    .7800    .8870

  X/C
    .050      .0000             .0200    .0000             .0030
    .250                      -.2760             .0000
    .400               -.2860            -.4610
    .550      .0000            -.2960   -.4770
    .600                                                  -.4860
    .700                                -.3010
    .725                       -.1810
    .750      .0000                               .0000
    .800               -.1480
    .850                                -.1510
    .900                       -.0970                     -.2150
    .950      .0000    -.0280            -.0080

MACH  ( 1) =    1.199    BETA  ( 4) =    3.050

 SECTION ( 1)ORBITER WING                        DEPENDENT VARIABLE CP

ETA           .2990    .4270    .5340    .6730    .7800    .8870

  X/C
    .050      .0000             .0000   -.0110             .0130
    .250                       -.3290             .0000
    .400               -.2950            -.4890
    .550      .0000            -.3860   -.5180
    .600                                                  -.5270
    .700                                -.3820
    .725                       -.1690
    .750      .0000                               .0000
    .800               -.1010
    .850                                -.1690
    .900                       -.0520                     -.3120
    .950      .0000     .0080            -.0190

MACH  ( 1) =    1.199    BETA  ( 5) =    6.070

 SECTION ( 1)ORBITER WING                        DEPENDENT VARIABLE CP

ETA           .2990    .4270    .5340    .6730    .7800    .8870

  Y/C
    .050      .0000            -.0490   -.0390             .0170
    .250                       -.3900             .000C
    .400               -.3330            -.5690
    .550      .0000            -.4200   -.5780
    .600                                                  -.5400
```

```
DATE 05 NOV 75          TABULATED DATA FOR CAL T14-053 (IA36)                                                          PAGE  708

                                         CAL T14-053 IA36 01 T1 S:  UPPER WING  POWER ON                  (UUF084)

MACH  ( 1) =    1.199   BETA  ( 5) =    6.070

 SECTION ( 1)ORBITER WING                      DEPENDENT VARIABLE CP

ETA          .2990   .4270   .5340   .6730    7800   .8870

  X/C
    .700                             -.4730
    .725                     -.2120
    .750     .0000                            .0000
    .800             -.0680
    .850                             -.2400
    .900                     -.0390                  -.4090
    .950     .0000   .0570           -.1240
```

```
DATE 05 NOV 75           TABULATED DATA FOR CAL T14-053 (IA36)                                                                    PAGE  709
                                        CAL T14-053 !A36 O1 T1 S1  UPPER WING  POWER ON                   (UUF095)    ( 09 OCT 73  )

                REFERENCE DATA                                                                              PARAMETRIC DATA

SREF  =  2690.0000 SQ.FT.   XMRP  =   953.0000 IN.                                          BETA    =       .000  OPR     =     95.800
LREF  =  1328.0000 IN.      YMRP  =      .0000 IN.                                          SRMPR   =      2.330  GP1     =       .000
BREF  =  1328.0000 IN.      ZMRP  =   400.0000 IN.                                          GY1     =       .000  GP2     =       .000
SCALE =      .0190 SCALE                                                                    GY2     =     -3.500  GP3     =       .000
                                                                                            GY3     =      3.500  RUDDER  =       .000

MACH  ( 1) =    1.195   ALPHA ( 1) =   -8.070

 SECTION ( 1)ORBITER WING                       DEPENDENT VARIABLE CP

ETA           .2930   .4270   .5340   .6730   .7800   .8870

  X/C
    .050     .0000            .3410   .3530            .3470
    .250                     -.0460            .0000
    .400             -.0170          -.1490
    .550     .0000            .0340  -.0270
    .600                                              -.1600
    .700                             -.1530
    .725                     -.1190
    .750     .0000                             .0000
    .800             -.0610
    .850                             -.1240
    .900                      .0010                    .0090
    .950     .0000    .1030           .0730

MACH  ( 1) =    1.194   ALPHA ( 2) =   -4.090

 SECTION ( 1)ORBITER WING                       DEPENDENT VARIABLE CP

ETA           .2990   .4270   .5340   .6730   .7800   .8870

  X/C
    .050     .0000            .1920   .2060            .1880
    .250                     -.1680            .0000
    .400             -.1870          -.3380
    .550     .0000           -.0550  -.2070
    .600                                              -.4180
    .700                             -.1890
    .725                     -.1560
    .750     .0000                             .0000
    .800             -.1110
    .850                             -.1480
    .900                     -.0620                    .0060
    .950     .0000    .0200           .0360
```

```
                                   CAL T14-053 IA36 01 T1 S1  UPPER WING  POWER ON              (UUF085)
MACH  ( 1) =     1.196   ALPHA ( 3) =    -.060
 SECTION ( 1)ORBITER WING                     DEPENDENT VARIABLE CP
ETA           .2990   .4270   .5340   .6730   .7800   .8870
  X/C
    .050    .0000            .0330  -.0050           .0060
    .250                    -.2800           .0000
    .400           -.2810           -.4650
    .550    .0000           -.3070  -.4840
    .600                                            -.4850
    .700                            -.3120
    .725                    -.1800
    .750    .0000                            .0000
    .800           -.1450
    .850                            -.1540
    .900                    -.1020                  -.2150
    .950    .0000  -.0240           -.0030
MACH  ( 1) =     1.199   ALPHA ( 4) =     5.970
 SECTION ( 1)ORBITER WING                     DEPENDENT VARIABLE CP
ETA           .2990   .4270   .5340   .6730   .7800   .8870
  X/C
    .050    .0000           -.2380  -.2900          -.2370
    .250                    -.5120           .0000
    .400           -.3680           -.6580
    .550    .0000           -.4720  -.6520
    .600                                            -.6410
    .700                            -.5720
    .725                    -.3220
    .750    .0000                            .0000
    .800           -.2030
    .850                            -.3470
    .900                    -.1870                  -.4390
    .950    .0000  -.0580           -.2120
```

```
                                            CAL T14-053 IA36 C1 T1 S1  UPPER WING  POWER ON                (UUF086)   ( 03 OCT 73  )

                 REFERENCE DATA                                                                               PARAMETRIC DATA

SREF  =  2690.0000 SQ.FT.   XMRP  =   953.0000 IN.                                         BETA    =        .000   OPR      =    66.700
LREF  =  1328.0000 IN.      YMRP  =      .0000 IN.                                         SRMPR   =       2.330   GP1      =      .000
BREF  =  1328.0000 IN.      ZMRP  =   400.0000 IN.                                         GY1     =        .000   GP2      =      .000
SCALE =      .0190 SCALE                                                                   GY2     =      -3.500   GP3      =      .000
                                                                                           GY3     =       3.500   RUDDER   =      .000

MACH  ( 1) =     1.191    ALPHA ( 1) =    -8.120

 SECTION ( 1)ORBITER WING                    DEPENDENT VARIABLE CP

ETA          .2990    .4270    .5340    .6730    .7800    .8870

  X/C
    .050    .0000             .3270    .3430             .3340
    .250                    -.0550             .0000
    .400            -.0400           -.1680
    .550    .0000             .0180   -.0380
    .600                                              -.1620
    .700                              -.1550
    .725                    -.1300
    .750    .0000                               .0000
    .800            -.0690
    .850                              -.1310
    .900                    -.0080                      .0040
    .950    .0000    .0920             .0620
MACH  ( 1) =     1.196    ALPHA ( 2) =    -4.090

 SECTION ( 1)ORBITER WING                    DEPENDENT VARIABLE CP

ETA          .2990    .4270    .5340    .6730    .7800    .8870

  X/C
    .050    .0000             .1870    .1930             .1900
    .250                    -.1520             .0000
    .400            -.1860           -.3330
    .550    .0000            -.0480   -.1990
    .600                                              -.4120
    .700                              -.1860
    .725                    -.1500
    .750    .0000                               .0000
    .800            -.1090
    .850                              -.1420
    .900                    -.0550                      .0060
    .950    .0000    .0220             .0420
```

```
MACH  ( 1) =    1.199   ALPHA ( 3) =    -.070

 SECTION ( 1)ORBITER WING                DEPENDENT VARIABLE CP

ETA          .2990   .4270   .5340   .6730   .7800   .8870

  X/C
     .050    .0000           .0210   .0010           .0100
     .250                   -.2820           .0000
     .400           -.2780          -.4600
     .550    .0000          -.3040  -.4770
     .600                                           -.4880
     .700                           -.3060
     .725                   -.1750
     .750    .0000                           .0000
     .800           -.1430
     .850                           -.1460
     .900                   -.0950                  -.2120
     .950    .0000  -.0220           .0070
MACH  ( 1) =    1.199   ALPHA ( 4) =    3.980

 SECTION ( 1)ORBITER WING                DEPENDENT VARIABLE CP

ETA          .2990   .4270   .5340   .6730   .7800   .8870

  X/C
     .050    .0000          -.1600  -.1980          -.1680
     .250                   -.4000           .0000
     .400           -.3350          -.6140
     .550    .0000          -.4350  -.5730
     .600                                           -.5980
     .700                           -.5120
     .725                   -.2510
     .750    .0000                           .0000
     .800           -.1770
     .850                           -.2740
     .900                   -.1410                  -.4430
     .950    .0000  -.0480          -.1080
MACH  ( 1) =    1.200   ALPHA ( 5) =    6.060

 SECTION ( 1)ORBITER WING                DEPENDENT VARIABLE CP

ETA          .2990   .4270   .5340   .6730   .7800   .8870

  X/C
     .050    .0000          -.2370  -.2900          -.2430
     .250                   -.5030           .0000
     .400           -.3510          -.5560
     .550    .0000          -.4730  -.6320
     .600                                           -.6330
```

```
                                   CAL T14-053 IA36 01 T1 S1  UPPER WING  POWER ON             (UUF086)

MACH  ( 1) =     1.200    ALPHA ( 5) =     6.060

 SECTION ( 1)ORBITER WING                  DEPENDENT VARIABLE CP

ETA          .2990    .4270    .5340    .6730    .7800    .8870

  X/C
    .700                                -.5890
    .725                       -.2970
    .750     .0000                               .0000
    .800              -.1980
    .850                                -.3260
    .900                       -.1720                     -.4350
    .950     .0000    -.0560            -.1890
```

```
                                    CAL T14-053 IA36 O1 T1 S1  UPPER WING  POWER ON          (UUF087)   ( 09 OCT 73  )

               REFERENCE DATA                                                                     PARAMETRIC DATA

SREF  =  2690.0000 SQ.FT.   XMRP  =   953.0000 IN.                         BETA    =      .000  OPR     =    36.200
LREF  =  1328.0000 IN.      YMRP  =      .0000 IN.                         SRMPR   =     3.170  GP1     =      .000
BREF  =  1328.0000 IN.      ZMRP  =   400.0000 IN.                         GY1     =      .000  GP2     =      .000
SCALE =      .0190 SCALE                                                   GY2     =    -3.500  GP3     =      .000
                                                                           GY3     =     3.500  RUDDER  =      .000

MACH  ( 1) =    1.197    ALPHA ( 1) =    -8.110

 SECTION ( 1)ORBITER WING                    DEPENDENT VARIABLE CP

ETA         .2990     .4270     .5340     .6730     .7800     .8870

  X/C
    .050    .0000               .3000     .3200               .3140
    .250                       -.0780               .0000
    .400             -.0430              -.0980
    .550    .0000               .0040    -.0510
    .600                                                     -.1820
    .700                                 -.1730
    .725                       -.1290
    .750    .0000                                   .0000
    .800             -.0840
    .850                                 -.1470
    .900                       -.0170                        -.0200
    .950    .0000     .0650               .0430

MACH  ( 1) =    1.201    ALPHA ( 2) =    -3.880

 SECTION ( 1)ORBITER WING                    DEPENDENT VARIABLE CP

ETA         .2990     .4270     .5340     .6730     .7800     .8670

  X/C
    .050    .0000               .1870     .2000               .1910
    .250                       -.1620               .0000
    .400             -.1840              -.3370
    .550    .0000              -.0510    -.2710
    .600                                                     -.4120
    .700                                 -.1780
    .725                       -.1380
    .750    .0000                                   .0000
    .800             -.0990
    .850                                 -.1390
    .900                       -.0540                         .0040
    .950    .0000     .0280               .0460
```

```
                       CAL T14-053 IA36 01 T1 S1  UPPER WING  POWER ON          (UUF087)

MACH  ( 1) =    1.198    ALPHA ( 3) =     .170

 SECTION ( 1)ORBITER WING                   DEPENDENT VARIABLE CP

ETA         .2990   .4270   .5340   .6730   .7800   .8870

  X/C
   .050     .0000           .0350   .0000           .0070
   .250                    -.2780           .0000
   .400            -.2740          -.4570
   .550     .0000          -.3130  -.4760
   .600                                            -.4950
   .700                            -.3070
   .725                    -.1690
   .750     .0000                           .0000
   .800            -.1390
   .850                            -.1410
   .900                    -.0960                  -.2260
   .950     .0000  -.0140           .0130
MACH  ( 1) =    1.198    ALPHA ( 4) =    4.230

 SECTION ( 1)ORBITER WING                   DEPENDENT VARIABLE CP

ETA         .2990   .4270   .5340   .6730   .7800   .8870

  X/C
   .050     .0000          -.1580  -.1980          -.1690
   .250                    -.4060            0000
   .400            -.3340          -.6170
   .550     .0000          -.4350  -.5810
   .600                                            -.6000
   .700                            -.5270
   .725                    -.2480
   .750     .0000                           .0000
   .800            -.1770
   .850                            -.2740
   .900                    -.1380                  -.4840
   .950     .0000  -.0440          -.1010
MACH  ( 1) =    1.197    ALPHA ( 5) =    6.130

 SECTION ( 1)ORBITER WING                   DEPENDENT VARIABLE CP

ETA         .2990   .4270   .5340   .6730   .7800   .8870

  X/C
   .050     .0000          -.2380  -.2790          -.2410
   .250                    -.5070           .0000
   .400            -.3590          -.6650
   .550     .0000          -.4730  -.6530
   .600                                            -.6320
```

CAL T14-053 IA36 OI TI SI UPPER WING POWER ON (UUF087)

MACH (1) = 1.197 ALPHA (5) = 6.130

SECTION (1)ORBITER WING DEPENDENT VARIABLE CP

ETA	.2990	.4270	.5340	.6730	.7800	.8870
X/C						
.700				-.6000		
.725			-.3020			
.750	.0000				.0000	
.800		-.2030				
.850				-.3230		
.900			-.1710			-.4440
.950	.0000	-.0550		-.1920		

```
                                  CAL T14-053 IA36 01 T1 S1  UPPER WING  POWER OFF           (UUF088)   ( 09 OCT 73  )

                REFERENCE DATA                                                                   PARAMETRIC DATA

SREF  =  2690.0000 SQ.FT.   XMRP  =   953.0000 IN.                          BETA   =      .000  GP1     =      .000
LREF  =  1328.0000 IN.      YMRP  =      .0000 IN.                          GY1    =      .000  GP2     =      .000
BREF  =  1328.0000 IN.      ZMRP  =   400.0000 IN.                          GY2    =    -3.500  GP3     =      .000
SCALE =      .0190 SCALE                                                    GY3    =     3.500  RUDDER  =      .000

MACH  ( 1) =      .898    ALPHA ( 1) =   -8.070

 SECTION ( 1)ORBITER WING                        DEPENDENT VARIABLE CP

ETA          .2990    .4270    .5340    .6730    .7800    .8870

  X/C
    .050     .0000             .2460    .2540             .1430
    .250                      -.1390             .0000
    .400              -.1570            -.3660
    .550     .0000            -.3550    -.4480
    .600                                                 -.6050
    .700                                -.1830
    .725                      -.1470
    .750     .0000                               .0000
    .800              -.0250
    .850                                 .0940
    .900                       .0890                      .0920
    .950     .0000     .0360             .1310

MACH  ( 1) =      .902    ALPHA ( 2) =   -4.050

 SECTION ( 1)ORBITER WING                        DEPENDENT VARIABLE CP

ETA          .2990    .4270    .5340    .6730    .7800    .8870

  X/C
    .050     .0000             .0590    .0700            -.0410
    .250                      -.3080             .0000
    .400              -.2450            -.4690
    .550     .0000            -.4100    -.5410
    .600                                                 -.5960
    .700                                -.2180
    .725                      -.2030
    .750     .0000                               .0000
    .800              -.0290
    .850                                 .0640
    .900                       .0900                      .0520
    .950     .0000     .0420             .1300
```

```
                          CAL T14-053 IA36 01 T1 S1  UPPER WING  POWER OFF          (UUF088)

MACH  ( 1) =    .899   ALPHA ( 3) =    -.030

 SECTION ( 1)ORBITER WINC                          DEPENDENT VARIABLE CP

ETA          .2990     .4270     .5340     .6730     .7800     .8870

  X/C
    .050     .0000              -.2410    -.2250              -.3770
    .250                        -.4910               .0000
    .400               -.3450              -.6010
    .550     .0000              -.4900    -.6210
    .600                                                      -.3200
    .700                                  -.1810
    .725                        -.1480
    .750     .0000                                   .0000
    .800               -.0350
    .850                                   .0330
    .900                         .0890                        -.0200
    .950     .0000      .0540              .1170
MACH  ( 1) =    .900   ALPHA ( 4) =    4.000

 SECTION ( 1)ORBITER WING                          DEPENDENT VARIABLE CP

ETA          .2990     .4270     .5340     .6730     .7800     .8870

  X/C
    .050     .0000              -.4740    -.5740              -.6330
    .250                        -.6570               .0000
    .400               -.4550              -.8810
    .550     .0000              -.5370    -.6490
    .600                                                      -.5670
    .700                                  -.1860
    .725                        -.1030
    .750     .0000                                   .0000
    .800               -.0370
    .850                                  -.0050
    .900                         .0630                        -.3630
    .950     .0000      .0820              .0970
MACH  ( 1) =    .901   ALPHA ( 5) =    5.970

 SECTION ( 1)ORBITER WING                          DEPENDENT VARIABLE CP

ETA          .2990     .4270     .5340     .6730     .7800     .8870

  X/C
    .050     .0000              -.6170    -.7030              -.7400
    .250                        -.7780               .0000
    .400               -.5310              -.9720
    .550     .0000              -.4770    -.4930
    .600                                                      -.5720
```

```
DATE 05 NOV 75             TABULATED DATA FOR CAL T14-053 (IA36)                                                     PAGE  719
                                       CAL T14-053 IA36 01 T1 S1  UPPER WING  POWER OFF               (UUF088)
MACH  ( 1) =     .901    ALPHA ( 5) =    5.970
 SECTION ( 1)ORBITER WING                  DEPENDENT VARIABLE CP
ETA         .2990   .4270   .5340   .6730   .7800   .8870

  X/C
    .700                           -.3190
    .725                   -.1510
    .750    .0000                           .0000
    .800           -.0380
    .850                           -.1500
    .900                    .0310                  -.4820
    .950    .0000   .0790          -.0200
```

```
DATE 05 NOV 75            TABULATED DATA FOR CAL T14-053 (IA36)                                        PAGE  720

                                 CAL T14-053 IA36 01 T1 S1  UPPER WING  POWER OFF               (UUF089)   ( 09 OCT 73  )
               REFERENCE DATA
                                                                                         PARAMETRIC DATA
SREF  =  2690.0000 SQ.FT.   XMRP  =   953.0000 IN.
LREF  =  1328.0000 IN.      YMRP  =      .0000 IN.                          ALPHA  =      .000   GP1     =     .000
BREF  =  1328.0000 IN.      ZMRP  =   400.0000 IN.                          GY1    =      .000   GP2     =     .000
SCALE =      .0190 SCALE                                                    GY2    =    -3.500   GP3     =     .000
                                                                            GY3    =     3.500   RUDDER  =     .000
MACH  ( 1) =     .903    BETA  ( 1) =   -6.080

 SECTION ( 1)ORBITER WING                     DEPENDENT VARIABLE CP

ETA         .2990    .4270    .5340    .6730    .7800    .8870

  X/C
   .050     .0000            -.0720   -.0910            -.2400
   .250                      -.3540             .0000
   .400              -.3010            -.5420
   .550     .0000            -.4880   -.5970
   .600                                                 -.2870
   .700                               -.3640
   .725                      -.4910
   .750     .0000                               .0000
   .800              -.1560
   .850                               -.0490
   .900                       .0300                     -.0780
   .950     .0000     .0020            .0570

MACH  ( 1) =     .899    BETA  ( 2) =   -3.050

 SECTION ( 1)ORBITER WING                     DEPENDENT VARIABLE CP

ETA         .2990    .4270    .5340    .6730    .7800    .8870

  X/C
   .050     .0000            -.1780   -.1770            -.3150
   .250                      -.4320             .0000
   .400              -.3330            -.5670
   .550     .0000            -.4960   -.6160
   .600                                                 -.3680
   .700                               -.2750
   .725                      -.3590
   .750     .0000                               .0000
   .800              -.1060
   .850                               -.0160
   .900                       .0350                     -.1070
   .950     .0000     .0290            .0870
```

```
                                  CAL T14-053 IA36 01 T1 S1  UPPER WING  POWER OFF             (UUF089)

MACH  ( 1) =     .902   BETA  ( 3) =     .000

 SECTION ( 1)ORBITER WING                      DEPENDENT VARIABLE CP

ETA         .2990   .4270   .5340   .6730   .7800   .8870

  X/C
    .050    .0000          -.2240  -.2240          -.3600
    .250                   -.4880           .0000
    .400           -.3510          -.5970
    .550    .0000          -.4830  -.6140
    .600                                           -.3830
    .700                           -.1900
    .725                   -.2220
    .750    .0000                           .0000
    .800           -.0380
    .850                            .0200
    .900                    .0740                  -.0540
    .950    .0000   .0500           .1090

MACH  ( 1) =     .901   BETA  ( 4) =    3.050

 SECTION ( 1)ORBITER WING                      DEPENDENT VARIABLE CP

ETA         .2990   .4270   .5340   .6730   .7800   .8870

  X/C
    .050    .0000          -.2860  -.2900          -.3930
    .250                   -.5650           .0000
    .400           -.3670          -.6580
    .550    .0000          -.4610  -.6010
    .600                                           -.3330
    .700                           -.0910
    .725                   -.0520
    .750    .0000                           .0000
    .800            .0280
    .850                            .0950
    .900                    .1250                   .0080
    .950    .0000   .0890           .1650

MACH  ( 1) =     .901   BETA  ( 5) =    6.090

 SECTION ( 1)ORBITER WING                      DEPENDENT VARIABLE CP

ETA         .2990   .4270   .5340   .6730   .7800   .8870

  X/C
    .050    .0000          -.3590  -.3720          -.4000
    .250                   -.5840           .0000
    .400           -.3700          -.8380
    .550    .0000          -.3460  -.4660
    .600                                           -.3880
```

```
                                   CAL T14-053 IA36 O1 T1 S1  UPPER WING  POWER OFF               (UUF089)

MACH  ( 1) =     .901   BETA  ( 5) =    6.090

 SECTION ( 1)ORBITER WING                 DEPENDENT VARIABLE CP

ETA          .2990   .4270   .5340   .6730   .7800   .8870

  X/C
    .700                             -.0390
    .725                     -.0040
    .750     .0000                           .0000
    .800             .0670
    .850                              .1350
    .900                      .1390                  -.0530
    .950     .0000   .1190            .1740
```

```
                                   CAL T14-053 IA36 01 T1 S1  UPPER WING  POWER ON              (UUF090)   ( 09 OCT 73  )

              REFERENCE DATA                                                                     PARAMETRIC DATA

SREF  =  2690.0000 SQ.FT.   XMRP  =   953.0000 IN.                        BETA   =       .000   OPR     =    28.310
LREF  =  1328.0000 IN.      YMRP  =      .0000 IN.                        SRMPR  =      2.020   GP1     =      .000
BREF  =  1328.0000 IN.      ZMRP  =   400.0000 IN.                        GY1    =       .000   CP2     =      .000
SCALE =      .0190 SCALE                                                  GY2    =     -3.500   GP3     =      .000
                                                                          GY3    =      3.500   RUDDER  =      .000

MACH  ( 1) =      .899    ALPHA ( 1) =    -3.990

 SECTION ( 1)ORBITER WING                    DEPENDENT VARIABLE CP

ETA          .2990    .4270    .5340    .6730    .7800    .8870

  X/C
    .050     .0000             .0790    .0980             -.0250
    .250                      -.2830              .0000
    .400             -.2220             -.4520
    .550     .0000            -.3900    -.5240
    .600                                                  -.5140
    .700                                -.1620
    .725                      -.1370
    .750     .0000                                .0000
    .800              .0020
    .850                                 .1030
    .900                       .1220                       .0980
    .950     .0000    .0700              .1680

MACH  ( 1) =      .899    ALPH. ( 2) =      .100

 SECTION ( 1)ORBITER WING                    DEPENDENT VARIABLE CP

ETA          .2990    .4270    .5340    .6730    .7800    .8870

  X/C
    .050     .0000            -.2020    -.2130            -.3520
    .250                      -.4670              .0000
    .400             -.3210             -.5880
    .550     .0000            -.4610    -.5960
    .600                                                  -.3380
    .700                                -.1460
    .725                      -.1530
    .750     .0000                                .0000
    .800             -.0010
    .850                                 .0680
    .900                       .1040                      -.0040
    .950     .0000    .0820              .1530
```

```
                                   CAL T14-053 IA36 01 T1 S1  UPPER WING  POWER ON            (UUF090)

MACH  ( 1) =     .897   ALPHA ( 3) =    4.030

 SECTION ( 1)ORBITER WING                       DEPENDENT VARIABLE CP

ETA          .2990   .4270   .5340   .6730   .7800   .8870

  X/C
    .050    .0000           -.4650  -.5660           - 6210
    .250                    -.6480           .0000
    .400            -.4420          -.8750
    .550    .0000           -.5200  -.6440
    .600                                             -.5590
    .700                            -.1760
    .725                    -.1110
    .750    .0000                            .0000
    .800            -.0230
    .850                             .0200
    .900                     .0730                   -.3630
    .950    .0000    .1040           .1200

MACH  ( 1) =     .901   ALPHA ( 4) =    5.980

 SECTION ( 1)ORBITER WING                       DEPENDENT VARIABLE CP

ETA          .2990   .4270   .5340   .6730   .7800   .8870

  X/C
    .050    .0000           -.5900  -.6900           -.7310
    .250                    -.7480           .0000
    .400            -.5070          -.9870
    .550    .0000           -.4980  -.4670
    .600                                             -.5600
    .700                            -.2770
    .725                    -.1390
    .750    .0000                            .0000
    .800            -.0070
    .850                            -.1140
    .900                     .0440                   -.4770
    .950    .0000    .1090           .0430
```

```
DATE 05 NOV 75            TABULATED DATA FOR CAL T14-053 (IA36)
                                                                                      PAGE  725
                              CAL T14-053 IA36 01 T1 S1  UPPER WING  POWER ON
              REFERENCE DATA                                                    (UUF091)   ( 09 OCT 73  )

SREF  =  2690.0000 SQ.FT.   XMRP  =   953.0000 IN.                                PARAMETRIC DATA
LREF  =  1328.0000 IN.      YMRP  =      .0000 IN.
BREF  =  1328.0000 IN.      ZMRP  =   400.0000 IN.                 ALPHA  =     .000   OPR     =    28.310
SCALE =     .0190 SCALE                                            SRMPR  =    2.020   GP1     =      .000
                                                                   GY1    =     .000   GP2     =      .000
                                                                   GY2    =   -3.500   GP3     =      .000
MACH  ( 1) =     .837    BETA  ( 1) =   -6.080                     GY3    =    3.500   RUDDER  =      .000

 SECTION ( 1)ORBITER WING                   DEPENDENT VARIABLE CP

ETA         .2990    .4270    .5340    .6730    .7800    .8370

  X/C
   .050     .0000            -.0570   -.0700            -.2290
   .250                      -.3390             .0000
   .400              -.2890           -.5250
   .550     .0000            -.4680   -.5870
   .600                                                 -.4660
   .700                               -.4500
   .725                      -.5750
   .750     .0000                               .0000
   .800              -.1750
   .850                               -.0340
   .900                       .0220                     -.0670
   .950     .0000     .0140            .0840
MACH  ( 1) =     .899    BETA  ( 2) =   -3.050

 SECTION ( 1)ORBITER WING                   DEPENDENT VARIABLE CP

ETA         .2990    .4270    .5340    .6730    .7800    .8370

  X/C
   .050     .0000            -.1450   -.1400            -.2940
   .250                      -.4150             .0000
   .400              -.3110           -.5520
   .550     .0000            -.4780   -.5930
   .600                                                 -.3300
   .700                               -.2700
   .725                      -.3010
   .750     .0000                               .0000
   .800              -.0880
   .850                                .0130
   .900                       .0720                     -.0490
   .950     .0000     .0440            .1110
```

```
                              CAL T14-053 IA3E 01 T1 S1  UPPER WING  POWER ON          (UUF091)

MACH  ( 1) =     .900   BETA  ( 3) =      .000

 SECTION ( 1)ORBITER WING                  DEPENDENT VARIABLE CP

ETA          .2990   .4270   .5340   .6730   .7800   .8870

  X/C
    .050    .0000           -.2120  -.1990          -.3410
    .250                    -.4660           .0000
    .400            -.3250          -.5860
    .550    .0000           -.4580  -.5940
    .600                                            -.3780
    .700                            -.1910
    .725                    -.1850
    .750    .0000                            .0000
    .800            -.0220
    .850                             .0420
    .900                     .1060                  -.0110
    .950    .0000    .0720           .1350

MACH  ( 1) =     .898   BETA  ( 4) =     3.050

 SECTION ( 1)ORBITER WING                  DEPENDENT VARIABLE CP

ETA          .2990   .4270   .5340   .6730   .7800   .8870

  X/C
    .050    .0000           -.2710  -.3020          -.3800
    .250                    -.5300           .0000
    .400            -.3480          -.6330
    .550    .0000           -.4280  -.5900
    .600                                            -.3190
    .700                            -.0610
    .725                    -.0300
    .750    .0000                            .0000
    .800             .0580
    .850                             .1360
    .900                     .1460                   .0450
    .950    .0000    .1190           .2060

MACH  ( 1) =     .900   BETA  ( 5) =     6.080

 SECTION ( 1)ORBITER WING                  DEPENDENT VARIABLE CP

ETA          .2990   .4270   .5340   .6730   .7800   .8870

  X/C
    .050    .0000           -.3270  -.3560          -.3920
    .250                    -.5610           .0000
    .400            -.3520          -.8150
    .550    .0000           -.3330  -.4190
    .600                                            -.3490
```

```
                                       CAL T14-053 IA36 01 T1 S1  UPPER WING  POWER ON                 (UUF091)

MACH  ( 1) =     .900   BETA  ( 5) =    6.080

 SECTION ( 1)ORBITER WING                      DEPENDENT VARIABLE CP

ETA          .2990   .4270   .5340   .6730   .7800   .8870

  X/C
    .700                             .0000
    .725                     .0240
    .750     .0000                           .0000
    .800             .0980
    .850                             .1700
    .900                     .1710                   .0570
    .950     .0000   .1450           .2040
```

```
                                                 CAL T14-053 IA36 01 T1 S1  UPPER WING  POWER ON                 (UUF092)    ( 09 OCT 73  )

            REFERENCE DATA                                                                                          PARAMETRIC DATA

SREF  =  2690.0000 SQ.FT.   XMRP  =    953.0000 IN.                                          BETA     =       .000   OPR     =     70.500
LREF  =  1328.0000 IN.      YMRP  =       .0000 IN.                                          SRMPR    =      2.020   GP1     =       .000
BREF  =  1328.0000 IN.      ZMRP  =    400.0000 IN.                                          GY1      =       .000   GP2     =       .000
SCALE =       .0190 SCALE                                                                    GY2      =     -3.500   GP3     =       .000
                                                                                             GY3      =      3.500   RUDDER  =       .000

MACH  ( 1) =      .900    ALPHA ( 1) =    -8.140

 SECTION ( 1)ORBITER WING                         DEPENDENT VARIABLE CP

ETA          .2990    .4270    .5340    .6730    .7800    .8870

  X/C
    .050     .0000             .2920    .2850             .1630
    .250                      -.0920             .0000
    .400             -.1260            -.3290
    .550     .0000            -.3150   -.4210
    .600                                                 -.5770
    .700                               -.1620
    .725                      -.1270
    .750     .0000                               .0000
    .800              .0020
    .850                                .1280
    .900                       .1170                      .1360
    .950     .0000    .0600             .1750

MACH  ( 1) =      .899    ALPHA ( 2) =    -4.020

 SECTION ( 1)ORBITER WING                         DEPENDENT VARIABLE CP

ETA          .2990    .4270    .5340    .6730    .7800    .8870

  X/C
    .050     .0000             .0860    .0960            -.0250
    .250                      -.2800             .0000
    .400             -.2160            -.4450
    .550     .0000            -.3820   -.5300
    .600                                                 -.5360
    .700                               -.1570
    .725                      -.1870
    .750     .0000                               .0000
    .800              .0040
    .850                                .1190
    .900                       .1230                      .1110
    .950     .0000    .0750             .1800
```

```
                          CAL T14-053 IA36 01 T1 S1  UPPER WING  POWER ON              (UUF092)

MACH  ( 1) =     .903    ALPHA ( 3) =      .020

 SECTION ( 1)ORBITER WING                       DEPENDENT VARIABLE CP

ETA         .2990   .4270   .5340   .6730   .7800   .8870

  X/C
    .050    .0000          -.1820  -.1790          -.3330
    .250                   -.4550           .0000
    .400           -.3110          -.5660
    .550    .0000          -.4450  -.5810
    .600                                           -.3830
    .700                           -.1410
    .725                   -.2000
    .750    .0000                           .0000
    .800            .0040
    .850                            .0800
    .900                    .1110                   .0400
    .950    .0000   .0910           .1510

MACH  ( 1) =     .900    ALPHA ( 4) =     4.020

 SECTION ( 1)ORBITER WING                       DEPENDENT VARIABLE CP

ETA         .2990   .4270   .5340   .6730   .7800   .8870

  X/C
    .050    .0000          -.4530  -.5590          -.6060
    .250                   -.6570           .0000
    .400           -.4380          -.8690
    .550    .0000          -.5110  -.6510
    .600                                           -.5580
    .700                           -.1760
    .725                   -.1090
    .750    .0000                           .0000
    .800           -.0310
    .850                            .0000
    .900                    .0680                  -.4080
    .950    .0000   .0970           .1040

MACH  ( 1) =     .898    ALPHA ( 5) =     6.010

 SECTION ( 1)ORBITER WING                       DEPENDENT VARIABLE CP

ETA         .2990   .4270   .5340   .6730   .7800   .8870

  X/C
    .050    .0000          -.5940  -.6950          -.7430
    .250                   -.7590           .0000
    .400           -.5140         -1.0040
    .550    .0000          -.5060  -.4650
    .600                                           -.5710
```

```
DATE 05 NOV 75            TABULATED DATA FOR CAL T14-053 (IA36)

                                 CAL T14-053 IA36 01 T1 S1  UPPER WING  POWER ON                (UUF092)

MACH  ( 1) =     .898    ALPHA ( 5) =    6.010

 SECTION ( 1)ORBITER WING                    DEPENDENT VARIABLE CP

ETA         .2990   .4270   .5340   .6730   .7800   .8870

  X/C
    .700                            -.2880
    .725                    -.1360
    .750    .0000                           .0000
    .800            -.0210
    .850                            -.1230
    .900                    .0560                   -.4930
    .950    .0000   .1040           .0180
```

```
                               CAL T14-053 IA36 01 T1 S1  UPPER WING  POWER ON                (UUF093)   ( 09 OCT 73  )

          REFERENCE DATA                                                                          PARAMETRIC DATA

SPEF  =  2690.0000 SQ.FT.  XMRP  =   953.0000 IN.                                     BETA   =      .000  OPR     =    48.600
LREF  =  1328.0000 IN.     YMRP  =      .0000 IN.                                     SRMPR  =     2.020  GP1     =      .000
BREF  =  1328.0000 IN.     ZMRP  =   400.0000 IN.                                     GY1    =      .000  GP2     =      .000
SCALE =      .0190 SCALE                                                              GY2    =    -3.500  GP3     =      .000
                                                                                      GY3    =     3.500  RUDDER  =      .000

MACH  ( 1) =     .898   ALPHA ( 1) =   -8.100

 SECTION ( 1)ORBITER WING                  DEPENDENT VARIABLE CP

ETA        .2990   .4270   .5340   .6730   .7800   .8870

  X/C
    .050   .0000           .2790   .2870           .1580
    .250                  -.1050           .0000
    .400          -.1390          -.3410
    .550   .0000          -.3280  -.4360
    .600                                          -.5860
    .700                          -.1910
    .725                  -.1440
    .750   .0000                           .0000
    .800          -.0090
    .850                           .1160
    .900                   .1070                   .1220
    .950   .0000   .0520           .1550
MACH  ( 1) =     .900   ALPHA ( 2) =   -3.990

 SECTION ( 1)ORBITER WING                  DEPENDENT VARIABLE CP

ETA        .2990   .4270   .5340   .6730   .7800   .8870

  X/C
    .050   .0000           .0810   .0850          -.0180
    .250                  -.2940           .0000
    .400          -.2200          -.4380
    .550   .0000          -.3850  -.5180
    .600                                          -.5860
    .700                          -.1850
    .725                  -.2060
    .750   .0000                           .0000
    .800          -.0010
    .850                           .1070
    .900              [illegible]                  .0900
    .950   .0000   .0670           .1570
```

```
                                   CAL T14-053 IA36 O1 T1 S1  UPPER WING  POWER ON              (UUF093)

MACH  ( 1) =     .899   ALPHA ( 3) =     .060

 SECTION ( 1)ORBITER WING                    DEPENDENT VARIABLE CP

ETA          .2390   .4270   .5340   .6730   .7800   .8870

  X/C
    .050    .0000           -.2170  -.2100          -.3560
    .250                    -.4740           .0000
    .400            -.3270          -.5850
    .550    .0000           -.4580  -.6000
    .600                                            -.4180
    .700                            -.1930
    .725                    -.1870
    .750    .0000                            .0000
    .800            -.0250
    .850                             .0480
    .900                     .0940                   .0140
    .950    .0000    .0710           .1410

MACH  ( 1) =     .906   ALPHA ( 4) =    4.060

 SECTION ( 1)ORBITER WING                    DEPENDENT VARIABLE CP

ETA          .2990   .4270   .5340   .6730   .7600   .8870

  X/C
    .050    .0000           -.4430  -.5420          -.6070
    .250                    -.6250           .0000
    .400            -.4240          -.8520
    .550    .0000           -.4970  -.6380
    .600                                            -.5440
    .700                            -.1690
    .725                    -.0910
    .750    .0000                            .0000
    .800            -.0220
    .850                             .0290
    .900                     .0860                  -.3690
    .950    .0000    .1110           .1340

MACH  ( 1) =     .898   ALPHA ( 5) =    6.010

 SECTION ( 1)ORBITER WING                    DEPENDENT VARIABLE CP

ETA          .2990   .4270   .5340   .6730   .7800   .8870

  X/C
    .050    .0000           -.6030  -.6930          -.7360
    .250                    -.7690           .0000
    .400            -.5220         -1.0070
    .550    .0000           -.5210  -.4910
    .600                                            -.5690
```

```
DATE 05 NOV 75             TABULATED DATA FOR CAL T14-053 (IA36)                                                         PAGE  733
                                       CAL T14-053 IA36 01 T1 S1  UPPER WING  POWER ON                (UUF093)

MACH  ( 1) =     .898    ALPHA ( 5) =    6.010

 SECTION ( 1)ORBITER WING                  DEPENDENT VARIABLE CP

ETA         .2990   .4270   .5340   .6730   .7800   .8870

  X/C
    .700                           -.2973
    .725                   -.1450
    .750    .0000                           .0000
    .800           -.0330
    .850                           -.1210
    .900                    .0450                  -.5070
    .950    .0000   .0970           .0110
```

```
                                    CAL T14-053 IA36 01 T1 S1  UPPER WING  POWER ON              (UUF094)   ( 09 OCT 73  )

            REFERENCE DATA                                                                     PARAMETRIC DATA

SREF  =  2690.0000 SQ.FT.   XMRP  =   953.0000 IN.                                  BETA   =     .000   CPR    =     28.310
LREF  =  1328.0000 IN.      YMRP  =      .0000 IN.                                  SRMPR  =    2.400   GP1    =       .000
BREF  =  1328.0000 IN.      ZMRP  =   400.0000 IN.                                  GY1    =     .000   GP2    =       .000
SCALE =      .0190 SCALE                                                            GY2    =   -3.500   GP3    =       .000
                                                                                    GY3    =    3.500   RUDDER =       .000

MACH  ( 1) =     .898    ALPHA ( 1) =   -7.970

 SECTION ( 1)ORBITER WING                         DEPENDENT VARIABLE CP

ETA          .2990   .4270   .5340   .6730   .7800   .8870

  X/C
    .050    .0000           .2870   .2940           .1730
    .250                   -.0980           .0000
    .400           -.1280          -.3270
    .550    .0000          -.3180  -.4180
    .600                                           -.4460
    .700                           -.0890
    .725                   -.0770
    .750    .0000                           .0000
    .800            .0150
    .850                            .1450
    .900                    .1340                   .1510
    .950    .0000   .0750           .1850
MACH  ( 1) =     .895    ALPHA ( 2) =   -3.980

 SECTION ( 1)ORBITER WING                         DEPENDENT VARIABLE CP

ETA          .2990   .4270   .5340   .6730   .7800   .8870

  X/C
    .050    .0000           .0730   .0900          -.0270
    .250                   -.2640           .0000
    .400           -.2270          -.4490
    .550    .0000          -.3870  -.5280
    .600                                           -.3490
    .700                           -.1320
    .725                   -.0870
    .750    .0000                           .0000
    .800            .0110
    .850                            .1290
    .900                    .1390                   .1430
    .950    .0000   .0800           .1850
```

```
                                   CAL T14-053 IA36 O1 T1 S1  UPPER WING  POWER ON              (UUF094)

MACH  ( 1) =     .902    ALPHA ( 3) =      .120

 SECTION ( 1)ORBITER WING                 DEPENDENT VARIABLE CP

ETA          .2990   .4270   .5340   .6730   .7800   .8870

  X/C
    .050     .0000          -.1880  -.1950          -.3390
    .250                    -.4430           .0000
    .400            -.3100          -.5680
    .550     .0000          -.4370  -.5810
    .600                                            -.2640
    .700                            -.0890
    .725                    -.0780
    .750     .0000                           .0000
    .800             .0310
    .850                             .1150
    .900                     .1450                   .0720
    .950     .0000   .1090           .2000

MACH  ( 1) =     .906    ALPHA ( 4) =     4.090

 SECTION ( 1)ORBITER WING                 DEPENDENT VARIABLE CP

ETA          .2990   .4270   .5340   .6730   .7800   .8870

  X/C
    .050     .0000          -.4330  -.5470          -.5970
    .250                    -.6340           .0000
    .400            -.4190          -.8490
    .550     .0000          -.4870  -.6030
    .600                                            -.5240
    .700                            -.1410
    .725                    -.0480
    .750     .0000                           .0000
    .800             .0090
    .850                             .0690
    .900                     .1230                  -.3070
    .950     .0000   .1360           .1860

MACH  ( 1) =     .898    ALPHA ( 5) =     6.070

 SECTION ( 1)ORBITER WING                 DEPENDENT VARIABLE CP

ETA          .2990   .4270   .5340   .6730   .7800   .8870

  X/C
    .050     .0000          -.6060  -.7000          -.7460
    .250                    -.7490           .0000
    .400            -.5090          -.9860
    .550     .0000          -.4240  -.4420
    .600                                            -.5520
```

```
                                         CAL T14-053 IA36 01 T1 S1  UPPER WING  POWER ON               (UUF094)

MACH  ( 1) =     .898    ALPHA ( 5) =    6.070

 SECTION ( 1)ORBITER WING                        DEPENDENT VARIABLE CP

ETA          .2990   .4[illegible]0   .5340   .6730   .7800   .8870

  X/C
    .700                            -.2760
    .725                    -.1170
    .750     .0000                           .0000
    .800             .0040
    .850                            -.0760
    .900                     .0850                   -.4680
    .950     .0000   .1250           .0760
```

```
DATE 05 NOV 75          TABULATED DATA FOR CAL T14-053 (IA36)                                                    PAGE  737

                                  CAL T14-053 IA36 01 T1 S1  UPPER WING  POWER OFF                 (UUF095)    ( 09 OCT 73  )

             REFERENCE DATA                                                                          PARAMETRIC DATA

SREF  =  2690.0000 SQ.FT.   XMRP  =   953.0000 IN.                                   BETA    =      .000   GP1     =       .000
LREF  =  1328.0000 IN.      YMRP  =      .0000 IN.                                   GY1     =      .000   GP2     =       .000
BREF  =  1328.0000 IN.      ZMRP  =   400.0000 IN.                                   GY2     =    -3.500   GP3     =       .000
SCALE =      .0190 SCALE                                                             GY3     =     3.500   RUDDER  =     10.000

MACH  ( 1) =     1.204    ALPHA ( 1) =    -8.100

 SECTION ( 1)ORBITER WING                        DEPENDENT VARIABLE CP

ETA            .2990    .4270    .5340    .6730    .7800    .8870

  X/C
    .050       .0000             .3030    .3450             .3160
    .250                        -.0750             .0000
    .400               -.0380             -.0670
    .550       .0000             .0110    -.0180
    .600                                                   -.1980
    .700                                  -.1430
    .725                        -.1000
    .750       .0000                               .0000
    .800               -.0820
    .850                                  -.1130
    .900                         .0110                     -.0270
    .950       .0000    .0730              .0640

MACH  ( 1) =     1.204    ALPHA ( 2) =    -4.040

 SECTION ( 1)ORBITER WING                        DEPENDENT VARIABLE CP

ETA            .2990    .4270    .5340    .6730    .7800    .8870

  X/C
    .050       .0000             .1760    .2160             .1660
    .250                        -.1780             .0000
    .400               -.2000             -.3130
    .550       .0000            -.0720    -.1960
    .600                                                   -.4460
    .700                                  -.1700
    .725                        -.1350
    .750       .0000                               .0000
    .800               -.1230
    .850                                  -.1310
    .900                        -.0450                     -.0320
    .950       .0000   -.0040              .0350
```

```
                                      CAL T14-053 IA36 01 T1 S1  UPPER WING  POWER OFF              (UUF095)
MACH  ( 1) =    1.207    ALPHA ( 3) =     -.020

 SECTION ( 1)ORBITER WING                       DEPENDENT VARIABLE CP

ETA          .2990   .4270   .5340   .6730   .7800   .8870

  X/C
   .050      .0000           .0440   .0240           -.0120
   .250                     -.2920            .0000
   .400             -.2880          -.4260
   .550      .0000          -.3050  -.4440
   .600                                              -.5030
   .700                             -.2740
   .725                     -.1610
   .750      .0000                            .0000
   .800             -.1570
   .850                             -.1370
   .900                     -.0800                   -.2380
   .950      .0000  -.0400          -.0210
MACH  ( 1) =    1.206    ALPHA ( 4) =     3.990

 SECTION ( 1)ORBITER WING                       DEPENDENT VARIABLE CP

ETA          .2990   .4270   .5340   .6730   .7800   .8870

  X/C
   .050      .0000          -.1620  -.1760           -.1930
   .250                     -.4040            .0000
   .400             -.3410          -.5580
   .550      .0000          -.4280  -.5320
   .600                                              -.6280
   .700                             -.4390
   .725                     -.2370
   .750      .0000                            .0000
   .800             -.1870
   .850                             -.2560
   .900                     -.1260                   -.3600
   .950      .0000  -.0630          -.1330
MACH  ( 1) =    1.204    ALPHA ( 5) =     6.030

 SECTION ( 1)ORBITER WING                       DEPENDENT VARIABLE CP

ETA          .2990   .4270   .5340   .6730   .7800   .8870

  X/C
   .050      .0000          -.2560  -.2700           -.2870
   .250                     -.5260            .0000
   .400             -.3660          -.6240
   .550      .0000          -.4810  -.5970
   .600                                              -.6760
```

```
DATE 05 NOV 75            TABULATED DATA FOR CAL T14-053 (IA36)                                         PAGE  739

                                   CAL T14-053 IA36 01 T1 S1  UPPER WING  POWER OFF            (UUF095)

MACH  ( 1) =    1.204    ALPHA ( 5) =    6.030

 SECTION ( 1)ORBITER WING                     DEPENDENT VARIABLE CP

ETA          .2990   .4270   .5340   .6730   .7800   .8870

  X/C
   .700                              -.5200
   .725                      -.3000
   .750      .0070                           .0000
   .800              -.2140
   .850                              -.3220
   .900                      -.1680                  -.4090
   .950      .0000   -.0830          -.2000
```

```
                                   CAL T14-053 IA36 01 T1 S1  UPPER WING  POWER OFF              (UUF096)   ( 09 OCT 73  )

           REFERENCE DATA                                                                      PARAMETRIC DATA

SREF  =  2690.0000 SQ.FT.   XMRP  =    953.0000 IN.                                  ALPHA  =       .000   GP1     =       .000
LREF  =  1328.0000 IN.      YMRP  =       .0000 IN.                                  GY1    =       .000   GP2     =       .000
BREF  =  1328.0000 IN.      ZMRP  =    400.0000 IN.                                  GY2    =     -3.500   GP3     =       .000
SCALE =       .0190 SCALE                                                            GY3    =      3.500   RUDDER  =     10.000

MACH  ( 1) =     1.202    BETA  ( 1) =    -6.060

 SECTION ( 1)ORBITER WING                       DEPENDENT VARIABLE CP

ETA           .2990    .4270    .5340    .6730    .7800    .8870

  X/C
    .050      .0000             -.0230    .0480             -.0090
    .250                        -.2620             .0000
    .400               -.2820             -.3900
    .550      .0000             -.1650   -.2910
    .600                                                    -.5130
    .700                                 -.2280
    .725                        -.2030
    .750      .0000                                .0000
    .800               -.2240
    .850                                 -.2020
    .900                        -.1600                      -.1330
    .950      .0000    -.0920             -.0750

MACH  ( 1) =     1.206    BETA  ( 2) =    -3.050

 SECTION ( 1)ORBITER WING                       DEPENDENT VARIABLE CP

ETA           .2990    .4270    .5340    .6730    .7800    .8870

  X/C
    .050      .0000              .0060    .0270             -.0080
    .250                        -.2850             .0000
    .400               -.2850             -.4120
    .550      .0000             -.2080   -.4300
    .600                                                    -.5140
    .700                                 -.2470
    .725                        -.1890
    .750      .0000                                .0000
    .600               -.2020
    .650                                 -.1700
    .900                        -.1270                      -.2020
    .950      .0000    -.0780             -.0440
```

```
                                  CAL T14-053 IA36 01 T1 S1  UPPER WING  POWER OFF           (UUF096)

MACH  ( 1) =    1.205   BETA  ( 3) =     .000

 SECTION ( 1)ORBITER WING                        DEPENDENT VARIABLE CP

ETA            .2990     .4270     .5340     .6730     .7800     .8870

  X/C
    .050       .0000               .0480     .0250              -.0110
    .250                          -.2880               .0000
    .400                -.2880              -.4250
    .550       .0000              -.3020    -.4380
    .600                                                        -.5070
    .700                                    -.2730
    .725                          -.1640
    .750       .0000                                   .0000
    .800                -.1560
    .850                                    -.1350
    .900                          -.0790                        -.2350
    .950       .0000    -.0410              -.0170

MACH  ( 1) =    1.205   BETA  ( 4) =    3.050

 SECTION ( 1)ORBITER WING                        DEPENDENT VARIABLE CP

ETA            .2990     .4270     .5340     .6730     .7800     .8870

  X/C
    .050       .0000               .0020     .0030              -.0040
    .250                          -.3400               .0000
    .400                -.3060              -.4540
    .550       .0000              -.3820    -.4850
    .600                                                        -.5710
    .700                                    -.3410
    .725                          -.1630
    .750       .0000                                   .0000
    .800                -.1210
    .850                                    -.1660
    .900                          -.0470                        -.3000
    .950       .0000    -.0120              -.0440

MACH  ( 1) =    1.204   BETA  ( 5) =    6.080

 SECTION ( 1)ORBITER WING                        DEPENDENT VARIABLE CP

ETA            .2990     .4270     .5340     .6730     .7800     .8870

  X/C
    .050       .0000              -.0550    -.0220               .0030
    .250                          -.4010               .0000
    .400                -.3410              -.5290
    .550       .0000              -.4290    -.5290
    .600                                                        -.5790
```

```
                                      CAL T14-053 IA36 01 T1 S1  UPPER WING  POWER OFF            (UUF096)
MACH  ( 1) =    1.204    BETA  ( 5) =    6.080

 SECTION ( 1)ORBITER WING                           DEPENDENT VARIABLE CP

ETA          .2990   .4270   .5340   .6730   .7800   .8870

  X/C
   .700                              -.4020
   .725                      -.2070
   .750      .0000
   .800              -.0900                  .0000
   .850                              -.2280
   .900                      -.0360                  -.3220
   .950      .0000   .0320           -.1300
```

```
DATE 05 NOV 75           TABULATED DATA FOR CAL T14-053 (IA36)                                                     PAGE  743

                                       CAL T14-053 IA36 O1 T1 S1  UPPER WING  POWER ON              (UUF097)    ( 09 OCT 73  )

               REFERENCE DATA                                                                          PARAMETRIC DATA

SREF  =  2690.0000 SQ.FT.   XMRP  =   953.0000 IN.                                         BETA    =      .000   OPR     =    36.200
LREF  =  1328.0000 IN.      YMRP  =      .0000 IN.                                         SRMPR   =     2.330   GP1     =      .000
BREF  =  1328.0000 IN.      ZMRP  =   400.0000 IN.                                         GY1     =      .000   GP2     =      .000
SCALE =      .0190 SCALE                                                                   GY2     =    -3.500   GP3     =      .000
                                                                                           GY3     =     3.500   RUDDER  =    10.000

MACH  ( 1) =     1.188    ALPHA ( 1) =    -7.790

 SECTION ( 1)ORBITER WING                   DEPENDENT VARIABLE CP

ETA            .2990     .4270     .5340     .6730     .7800     .8870

  X/C
   .050        .0000               .2920     .3190               .2980
   .250                           -.0840               .0000
   .400                 -.0860              -.2310
   .550        .0000               .0020    -.0340
   .600                                                         -.2070
   .700                                     -.1540
   .725                           -.1150
   .750        .0000                                   .0000
   .800                 -.0950
   .850                                     -.1190
   .900                           -.0060                        -.0190
   .950        .0000     .0700               .0570
MACH  ( 1) =     1.205    ALPHA ( 2) =    -4.020

 SECTION ( 1)ORBITER WING                   DEPENDENT VARIABLE CP

ETA            .2990     .4270     .5340     .6730     .7800     .8870

  X/C
   .050        .0000               .2010     .2290               .1840
   .250                           -.1590               .0000
   .400                 -.1680              -.2850
   .550        .0000              -.0390    -.1400
   .600                                                         -.4320
   .700                                     -.1480
   .725                           -.1140
   .750        .0000                                   .0000
   .800                 -.1000
   .850                                     -.1070
   .900                           -.0220                         .0000
   .950        .0000     .0240               .0650
```

```
                                         CAL T14-053 IA36 O1 T1 S1  UPPER WING  POWER ON                (UUF097)

MACH  ( 1) =    1.187   ALPHA ( 3) =    4.060

 SECTION ( 1)ORBITER WING                     DEPENDENT VARIABLE CP

ETA          .2990   .4270   .5340   .6730   .7800   .8870

  X/C
    .050    .0000           -.1750  -.1950          -.2140
    .250                    -.4390           .0000
    .400            -.3610          -.6020
    .550    .0000           -.4600  -.5620
    .600                                            -.6640
    .700                            -.4800
    .725                    -.2630
    .750    .0000                            .0000
    .800            -.2060
    .850                            -.2800
    .900                    -.1590                  -.4060
    .950    .0000   -.0750          -.1470

MACH  ( 1) =    1.192   ALPHA ( 4) =    6.010

 SECTION ( 1)ORBITER WING                     DEPENDENT VARIABLE CP

ETA          .2990   .4270   .5340   .6730   .7800   .8870

  X/C
    .050    .0000           -.2520  -.2760          -.2950
    .250                    -.5350           .0000
    .400            -.3800          -.6460
    .550    .0000           -.4830  -.6330
    .600                                            -.7000
    .700                            -.5430
    .725                    -.3160
    .750    .0000                            .0000
    .800            -.2150
    .850                            -.3320
    .900                    -.1860                  -.4380
    .950    .0000   -.0800          -.1980
```

```
                                  CAL T14-053 IA36 01 T1 S1  UPPER WING  POWER ON              (UUF098)   ( 09 OCT 73  )

           REFERENCE DATA                                                                       PARAMETRIC DATA

SREF  =  2690.0000 SQ.FT.   XMRP  =   953.0000 IN.                               ALPHA  =      .000   OPR     =    36.200
LREF  =  1328.0000 IN.      YMRP  =      .0000 IN.                               SRMPR  =     2.330   GP1     =      .000
BREF  =  1328.0000 IN.      ZMRP  =   400.0000 IN.                               GY1    =      .000   GP2     =      .000
SCALE =      .0190 SCALE                                                         GY2    =    -3.500   GP3     =      .000
                                                                                 GY3    =     3.500   RUDDER  =    10.000

MACH  ( 1) =    1.196    BETA  ( 1) =   -6.070

 SECTION ( 1)ORBITER WING                      DEPENDENT VARIABLE CP

ETA          .2990    .4270    .5340    .6730    .7800    .8870

  X/C
    .050     .0000            -.0240    .0480             -.0080
    .250                      -.2590             .0000
    .400             -.2710             -.3880
    .550     .0000            -.1520    -.2570
    .600                                                  -.5220
    .700                                -.2190
    .725                      -.2040
    .750     .0000                               .0000
    .800             -.2230
    .850                                -.2020
    .900                      -.1620                      -.1260
    .950     .0000   -.0870             -.0690

MACH  ( 1) =    1.207    BETA  ( 2) =   -3.050

 SECTION ( 1)ORBITER WING                      DEPENDENT VARIABLE CP

ETA          .2990    .4270    .5340    .6730    .7800    .8870

  X/C
    .050     .0000             .0130    .0560              .0100
    .250                      -.2660             .0000
    .400             -.2520             -.3930
    .550     .0000            -.1700    -.3870
    .600                                                  -.5050
    .700                                -.2210
    .725                      -.1640
    .750     .0000                               .0000
    .800             -.1770
    .850                                -.1570
    .900                      -.1020                      -.1730
    .950     .0000   -.0540             -.0150
```

```
DATE 05 NOV 75             TABULATED DATA FOR CAL T14-053 (1A36)
                                  CAL T14-053 1A36 01 T1 S1  UPPER WING  POWER ON            (UUF098)

MACH  ( 1) =     1.204    BETA  ( 3) =       .000

 SECTION ( 1)ORBITER WING                   DEPENDENT VARIABLE CP

ETA           .2990    .4270    .5340    .6730    .7800    .8870

  X/C
    .050      .0000             .0460    .0260            -.0100
    .250                       -.2740             .0000
    .400               -.2790            -.4210
    .550      .0000            -.2960    -.4310
    .600                                                  -.5030
    .700                                 -.2590
    .725                       -.1480
    .750      .0000                               .0000
    .800               -.1380
    .850                                 -.1200
    .900                       -.0630                     -.2330
    .950      .0000    -.0100             .0010
MACH  ( 1) =     1.204    BETA  ( 4) =      3.050

 SECTION ( 1)ORBITER WING                   DEPENDENT VARIABLE CP

ETA           .2990    .4270    .5340    .6730    .7800    .8870

  X/C
    .050      .0000             .0050    .0220             .0060
    .250                       -.3240             .0000
    .400               -.2890            -.4390
    .550      .0000            -.3680    -.4630
    .600                                                  -.5590
    .700                                 -.3220
    .725                       -.1450
    .750      .0000                               .0000
    .800               -.0910
    .850                                 -.1330
    .900                       -.0280                     -.3080
    .950      .0000     .0200            -.0120
MACH  ( 1) =     1.205    BETA  ( 5) =      6.080

 SECTION ( 1)ORBITER WING                   DEPENDENT VARIABLE CP

ETA           .2990    .4270    .5340    .6730    .7800    .8870

  X/C
    .050      .0000            -.0320    -.0050            .0160
    .250                       -.3780             .0000
    .400               -.3240            -.5150
    .550      .0000            -.4150    -.5190
    .600                                                  -.5640
```

```
                              CAL T14-053 IA36 01 T1 S1  UPPER WING  POWER ON              (UUF098)

MACH  ( 1) =    1.205   BETA  ( 5) =    6.080

 SECTION ( 1)ORBITER WING                DEPENDENT VARIABLE CP

ETA         .2990   .4270   .5340   .6730   .7800   .8870

  X/C
    .700                            -.4110
    .725                    -.1870
    .750    .0000                           .0000
    .800            -.0700
    .850                            -.1990
    .900                    -.0130                  -.3580
    .950    .0000   .0620           -.1030
```

```
DATE 05 NOV 75            TABULATED DATA FOR CAL T14-053 (IA36)                                              PAGE  748

                                   CAL T14-053 IA36 O1 T1 S1  UPPER WING  POWER ON              (UUF099)    ( 09 OCT 73 )

                  REFERENCE DATA                                                                  PARAMETRIC DATA

SREF  =  2690.0000 SQ.FT.   XMRP  =    953.0000 IN.                          ALPHA  =      .000  OPR     =    97.600
LREF  =  1328.0000 IN.      YMRP  =       .0000 IN.                          SRMPP  =     2.330  GP1     =      .000
BREF  =  1328.0000 IN.      ZMRP  =    400.0000 IN.                          GY1    =      .000  GP2     =      .000
SCALE =      .0190 SCALE                                                     GY2    =    -3.500  GP3     =      .000
                                                                             GY3    =     3.500  RUDDER  =    10.000

MACH  ( 1) =     1.203    BETA  ( 1) =    -6.080

 SECTION ( 1)ORBITER WING                      DEPENDENT VARIABLE CP

ETA          .2990    .4270    .5340    .6730    .7800    .8870

  X/C
   .050      .0000             -.0200    .0570             -.0100
   .250                        -.2450             .0000
   .400               -.2630             -.3790
   .550      .0000             -.1560    -.3020
   .600                                                     -.5040
   .700                                  -.2060
   .725                        -.1880
   .750      .0000                                .0000
   .800               -.2080
   .850                                  -.1790
   .900                        -.1420                       -.1170
   .950      .0000    -.0690             -.0430
MACH  ( 1) =     1.203    BETA  ( 2) =    -3.050

 SECTION ( 1)ORBITER WING                      DEPENDENT VARIABLE CP

ETA          .2990    .4270    .5340    .6730    .7800    .8870

  X/C
   .050      .0000              .0020    .0390              .0040
   .250                        -.2780             .0000
   .400               -.2760             -.4050
   .550      .0000             -.2080    -.4280
   .600                                                     -.5150
   .700                                  -.2250
   .725                        -.1770
   .750      .0000                                .0000
   .800               -.1880
   .850                                  -.1540
   .900                        -.1110                       -.1920
   .950      .0000    -.0530             -.0260
```

```
                                    CAL T14-053 IA36 O1 T1 S1  UPPER WING  POWER ON            (UUF099)
MACH  ( 1) =    1.061    BETA  ( 3) =     .000

 SECTION ( 1)ORBITER WING                     DEPENDENT VARIABLE CP

ETA          .2990   .4270   .5340   .6730   .7800   .8870

  X/C
    .050     .0000           -.0280  -.0170          -.0880
    .250                     -.2450           .0000
    .400            -.1260           -.3460
    .550     .0000           -.2170  -.3010
    .600                                             -.5370
    .700                             -.3800
    .725                     -.3010
    .750     .0000                            .0000
    .800            -.2610
    .850                             -.2190
    .900                     -.1250                  -.1370
    .950     .0000  -.0790           -.0410

MACH  ( 1) =    1.118    BETA  ( 4) =    2.980

 SECTION ( 1)ORBITER WING                     DEPENDENT VARIABLE CP

ETA          .2990   .4270   .5340   .6730   .7800   .8870

  X/C
    .050     .0000           -.0330  -.0270          -.0670
    .250                     -.3330           .0000
    .400            -.3230           -.4970
    .550     .0000           -.1590  -.3460
    .600                                             -.6130
    .700                             -.2880
    .725                     -.2430
    .750     .0000                            .0000
    .800            -.2100
    .850                             -.1690
    .900                     -.1160                  -.2380
    .950     .0000  -.0700           -.0110

MACH  ( 1) =    1.199    BETA  ( 5) =    6.080

 SECTION ( 1)ORBITER WING                     DEPENDENT VARIABLE CP

ETA          .2990   .4270   .5340   .6730   .7800   .8870

  X/C
    .050     .0000           -.0360  -.0150           .0110
    .250                     -.3880           .0000
    .400            -.3400           -.5360
    .550     .0000           -.4300  -.5400
    .600                                             -.5770
```

```
DATE 05 NOV 75            TABULATED DATA FOR CAL T14-053 (IA36)                                        PAGE  750

                                     CAL T14-053 IA36 01 T1 S1  UPPER WING  POWER ON            (UUF099)

MACH  ( 1) =    1.199   BETA  ( 5) =    6.080

 SECTION ( 1)ORBITER WING                      DEPENDENT VARIABLE CP

ETA          .2990   .4270   .5340   .6730   .7800   .8870

  X/C
    .700                             -.4260
    .725                     -.2040
    .750     .0000                           .0000
    .800            -.0720
    .850                             -.2240
    .900                     -.0310                  -.3970
    .950     .0000   .0580           -.1250
```

```
DATE 05 NOV 75            TABULATED DATA FOR CAL T14-053 (IA35)                                                   PAGE  751

                                      CAL T14-053 IA36 01 T1 S1  UPPER WING  POWER OFF              (UUF100)    ( 09 OCT 73  )

                 REFERENCE DATA                                                                          PARAMETRIC DATA

SREF  =  2690.0000 SQ.FT.   XMRP  =   953.0000 IN.                                   BETA    =       .000   GP1     =       .000
LREF  =  1328.0000 IN.      YMRP  =      .0000 IN.                                   GY1     =       .000   GP2     =       .000
BREF  =  1328.0000 IN.      ZMRP  =   400.0000 IN.                                   GY2     =     -3.500   GP3     =       .000
SCALE =      .0190 SCALE                                                             GY3     =      3.500   RUDDER  =     10.000

MACH  ( 1) =      .902    ALPHA ( 1) =    -8.100

 SECTION ( 1)ORBITER WING                      DEPENDENT VARIABLE CP

ETA          .2990    .4270    .5340    .6730    .7800    .8870

  X/C
    .050    .0000             .2420    .2550             .1510
    .250                     -.1440             .0000
    .400            -.1610            -.3570
    .550    .0000            -.3440   -.4450
    .600                                                 -.5770
    .700                              -.1800
    .725                     -.1320
    .750    .0000                               .0000
    .800            -.0230
    .850                               .0790
    .900                      .0840                      .1020
    .950    .0000    .0330             .1110

MACH  ( 1) =      .907    ALPHA ( 2) =    -4.040

 SECTION ( 1)ORBITER WING                      DEPENDENT VARIABLE CP

ETA          .2990    .4270    .5340    .6730    .7800    .8670

  X/C
    .050    .0000             .0490    .0680             -.0390
    .250                     -.3090             .0000
    .400            -.2440            -.4660
    .550    .0000            -.4190   -.5240
    .600                                                 -.6250
    .700                              -.3070
    .725                     -.2800
    .750    .0000                               .0000
    .800            -.0490
    .850                               .0360
    .900                      .0740                      .0150
    .950    .0000    .0380             .1010
```

```
                                      CAL T14-053 IA35 01 T1 S1  UPPER WING  POWER OFF              (UUF100)

MACH  ( 1) =     .899   ALPHA ( 3) =     .020

 SECTION ( 1)ORBITER WING                    DEPENDENT VARIABLE CP

ETA          .2990   .4270   .5340   .6730   .7800   .8870

  X/C
    .050     .0000          -.2350  -.2190          -.3750
    .250                    -.4920           .0000
    .400            -.3670          -.6000
    .550     .0000          -.4830  -.6060
    .600                                            -.3270
    .700                            -.1920
    .725                    -.1650
    .750     .0000                           .0000
    .800            -.0430
    .850                             .0030
    .900                     .0650                  -.0580
    .950     .0000   .0460           .0820

MACH  ( 1) =     .903   ALPHA ( 4) =    3.980

 SECTION ( 1)ORBITER WING                    DEPENDENT VARIABLE CP

ETA          .2990   .4270   .5340   .6730   .7800   .8870

  X/C
    .050     .0000          -.4510  -.5590          -.6240
    .250                    -.6620           .0000
    .400            -.4350          -.8460
    .550     .0000          -.5290  -.5260
    .600                                            -.5360
    .700                            -.2280
    .725                    -.1410
    .750     .0000                           .0000
    .800            -.0340
    .850                            -.0490
    .900                     .0510                  -.3430
    .950     .0000   .0830           .0600

MACH  ( 1) =     .900   ALPHA ( 5) =    6.010

 SECTION ( 1)ORBITER WING                    DEPENDENT VARIABLE CP

ETA          .2990   .4270   .5340   .6730   .7800   .8870

  X/C
    .050     .0000          -.6060  -.6940          -.7570
    .250                    -.7800           .0000
    .400            -.5370          -.7170
    .550     .0000          -.4420  -.5430
    .600                                            -.5860
```

```
DATE 05 NOV 75            TABULATED DATA FOR CAL T14-053 (IA36)                                        PAGE 753

                                    CAL T14-053 IA36 01 T1 S1  UPPER WING  POWER OFF             (UUF100)

MACH  ( 1) =     .900    ALPHA ( 5) =    6.010

 SECTION ( 1)ORBITER WING                       DEPENDENT VARIABLE CP

ETA          .2990   .4270   .5340   .6730   .7800   .8870

  X/C
   .700                              -.3890
   .725                      -.2070
   .750      .0000                           .0000
   .800              -.0600
   .850                              -.2410
   .900                      -.0010                  -.4890
   .950      .0000   .0650           -.0600
```

```
                                         CAL T14-053 IA36 O1 T1 S1  UPPER WING  POWER OFF               (UUF101)    ( 09 OCT 73  )

               REFERENCE DATA                                                                          PARAMETRIC DATA

SREF  =  2690.0000 SQ.FT.   XMRP  =   953.0000 IN.                                   ALPHA  =       .000  GP1     =       .000
LREF  =  1328.0000 IN.      YMRP  =      .0000 IN.                                   GY1    =       .000  GP2     =       .000
BREF  =  1328.0000 IN.      ZMRP  =   400.0000 IN.                                   GY2    =     -3.500  GP3     =       .000
SCALE =      .0190 SCALE                                                             GY3    =      3.500  RUDDER  =     10.000

MACH  ( 1) =      .900    BETA  ( 1) =    -6.080

 SECTION ( 1)ORBITER WING                    DEPENDENT VARIABLE CP

ETA          .2990    .4270    .5340    .6730    .7800    .8870

  X/C
    .050     .0000            -.0790   -.0910            -.2350
    .250                      -.3560             .0000
    .400             -.3080            -.5320
    .550     .0000            -.4990   -.5940
    .600                                                 -.3410
    .700                               -.3400
    .725                      -.5040
    .750     .0000                               .0000
    .800             -.1570
    .850                               -.0570
    .900                       .0030                     -.0890
    .950     .0000   -.0020             .0420

MACH  ( 1) =      .901    BETA  ( 2) =    -3.050

 SECTION ( 1)ORBITER WING                    DEPENDENT VARIABLE CP

ETA          .2990    .4270    .5340    .6730    .7800    .8870

  X/C
    .050     .0000            -.1720   -.1760            -.3180
    .250                      -.4140             .0000
    .400             -.3450            -.5460
    .550     .0000            -.4950   -.6070
    .600                                                 -.3270
    .700                               -.2480
    .725                      -.3200
    .750     .0000                               .0000
    .800             -.0950
    .850                               -.0310
    .900                       .0290                     -.0840
    .950     .0000    .0270             .0720
```

```
                                  CAL T14-053 IA36 01 T1 S1  UPPER WING  POWER OFF         (UUF101)

MACH  ( 1) =    .903   BETA  ( 3) =    .000

 SECTION ( 1)ORBITER WING                 DEPENDENT VARIABLE CP

ETA           .2990  .4270  .5340  .6730  .7800  .8870

  X/C
    .050      .0000        -.2240 -.2040        -.3460
    .250                   -.4750         .0000
    .400             -.3560       -.5870
    .550      .0000        -.4730 -.5930
    .600                                        -.3210
    .700                          -.1820
    .725                   -.1750
    .750      .0000                       .0000
    .800             -.0330
    .850                           .0090
    .900                    .0740               -.0560
    .950      .0000   .0550        .0890
MACH  ( 1) =    .902   BETA  ( 4) =   3.050

 SECTION ( 1)ORBITER WING                 DEPENDENT VARIABLE CP

ETA           .2990  .4270  .5340  .6730  .7800  .8870

  X/C
    .050      .0000        -.2800 -.2780        -.3990
    .250                   -.5440         .0000
    .400             -.3760       -.6310
    .550      .0000        -.4470 -.5860
    .600                                        -.3380
    .700                          -.0940
    .725                   -.0630
    .750      .0000                       .0000
    .800              .0300
    .850                           .0700
    .900                    .1040               -.0350
    .950      .0000   .0930        .1460
MACH  ( 1) =    .903   BETA  ( 5) =   6.090

 SECTION ( 1)ORBITER WING                 DEPENDENT VARIABLE CP

ETA           .2990  .4270  .5340  .6730  .7800  .8870

  X/C
    .050      .0000        -.3460 -.3660        -.4000
    .250                   -.5820         .0000
    .400             -.3800       -.8080
    .550      .0000        -.3370 -.4070
    .600                                        -.4260
```

```
                                       CAL T14-053 IA36 01 T1 S1  UPPER WING  POWEP OFF              (UUF101)

MACH  ( 1) =     .903   BETA  ( 5) =    6.090

 SECTION ( 1)ORBITER WING                      DEPENDENT VARIABLE CP

ETA          .2990   .4270   .5340   .6730   .7800   .8870

  X/C
   .700                             -.0640
   .725                     -.0220
   .750      .0000                           .0000
   .800              .0570
   .850                              .0920
   .900                      .1250                  -.1400
   .950      .0000   .1180           .1360
```

```
DATE 05 NOV 75            TABULATED DATA FOR CAL T14-053 (IA36)                                                   PAGE  757

                                         CAL T14-053 IA36 01 T1 S1  UPPER WING  POWER ON             (UUF102)   ( 09 OCT 73  )

               REFERENCE DATA                                                                          PARAMETRIC DATA

SREF  =  2690.0000 SQ.FT.   XMRP  =   953.0000 IN.                                           BETA    =      .000  OPR     =    28.310
LREF  =  1328.0000 IN.      YMRP  =      .0000 IN.                                           SRMPR   =     2.020  GP1     =      .000
BREF  =  1328.0000 IN.      ZMRP  =   400.0000 IN.                                           GY1     =      .000  GP2     =      .000
SCALE =      .0190 SCALE                                                                     GY2     =    -3.500  GP3     =      .000
                                                                                             GY3     =     3.500  RUDDER  =    10.000

MACH  ( 1) =      .899    ALPHA ( 1) =   -7.860

 SECTION ( 1)ORBITER WING                     DEPENDENT VARIABLE CP

ETA         .2990   .4270   .5340   .6730   .7800   .8870

  X/C
    .050    .0000           .2720   .2810           .1540
    .250                   -.1180           .0000
    .400           -.1400          -.3270
    .550    .0000          -.3230  -.4150
    .600                                           -.5830
    .700                           -.1360
    .725                   -.1250
    .750    .0000                           .0000
    .800            .0010
    .850                            .1190
    .900                    .1070                   .1170
    .950    .0000   .0560           .1620

MACH  ( 1) =      .901    ALPHA ( 2) =   -4.040

 SECTION ( 1)ORBITER WING                     DEPENDENT VARIABLE CP

ETA         .2990   .4270   .5340   .6730   .7800   .8870

  X/C
    .050    .0000           .0910   .0870          -.0220
    .250                   -.2910           .0000
    .400           -.2210          -.4600
    .550    .0000          -.3950  -.5110
    .600                                           -.5080
    .700                           -.2250
    .725                   -.1630
    .750    .0000                           .0000
    .800           -.0180
    .850                            .0680
    .300                    .1000                   .0780
    .950    .0000   .0600           .1350
```

```
                                    CAL T14-053 IA36 O1 T1 S1  UPPER WING  POWER ON              (UUF102)

MACH  ( 1) =     .901    ALPHA ( 3) =    -.039

 SECTION ( 1)ORBITER WING                        DEPENDENT VARIABLE CP

ETA          .2990    .4270   .5340   .6730   .7800   .8870

  X/C
    .050     .0000            -.2020  -.1930          -.3400
    .250                      -.4450          .0000
    .400             -.3360           -.5800
    .550     .0000            -.4580  -.5750
    .600                                              -.3230
    .700                              - 1830
    .725                      -.1580
    .750     .0000                            .0000
    .800             -.0210
    .850                              .0250
    .900                       .0860                  -.0250
    .950     .0000    .0740           .1040
MACH  ( 1) =     .904    ALPHA ( 4) =    4.110

 SECTION ( 1)ORBITER WING                        DEPENDENT VARIABLE CP

ETA          .2990    .4270   .5340   .6730   .7800   .8870

  X/C
    .050     .0000            -.4400  -.5500          -.6200
    .250                      -.6500          .0000
    .400             -.4300           -.8430
    .550     .0000            -.5090  -.5320
    .600                                              -.5370
    .700                              -.2420
    .725                      -.1070
    .750     .0000                            .0000
    .800             -.0490
    .850                              -.0630
    .900                       .0660                  -.3550
    .950     .0000    .0910           .0510
MACH  ( 1) =     .920    ALPHA ( 5) =    6.080

 SECTION ( 1)ORBITER WING                        DEPENDENT VARIABLE CP

ETA          .2990    .4270   .5340   .6730   .7800   .8870

  X/C
    .050     .0000            -.5290  -.6310          -.7030
    .250                      -.7020          .0000
    .400             -.4430           -.6500
    .550     .0000            -.3800  -.4250
    .600                                              -.5070
```

```
DATE 05 NOV 75            TABULATED DATA FOR CAL T14-053 (IA36)                                                   PAGE  759
                                       CAL T14-053 IA36 O1 T1 S1  UPPER WING  POWER ON                (UUF102)

MACH  ( 1) =     .920   ALPHA ( 5) =    6.080

 SECTION ( 1)ORBITER WING                  DEPENDENT VARIABLE CP

ETA          .2990   .4270   .5340   .6730   .7800   .8870

  X/C
    .700                             -.2770
    .725                     -.1420
    .750     .0000                           .0000
    .800             .0300
    .850                             -.0670
    .900                     .0720                   -.3960
    .950     .0000   .1500           .0440
```

```
                                                   CAL T14-053 IA36 01 T1 S1  UPPER WING  POWER ON                (UUF103)   ( 09 OCT 73  )

                 REFERENCE DATA                                                                                     PARAMETRIC DATA

SREF  =  2690.0000 SQ.FT.    XMRP  =    953.0000 IN.                                              ALPHA   =       .000  OPR     =     28.310
LREF  =  1328.0000 IN.       YMRP  =       .0000 IN.                                              SRMPR   =      2.020  GP1     =       .000
BREF  =  1328.0000 IN.       ZMRP  =     00.0000 IN.                                              GY1     =       .000  GP2     =       .000
SCALE =      .0190 SCALE                                                                          GY2     =     -3.500  GP3     =       .000
                                                                                                  GY3     =      3.500  RUDDER  =     10.000

MACH  ( 1) =     .904    BETA  ( 1) =    -6.090

 SECTION ( 1)ORBITER WING                     DEPENDENT VARIABLE CP

ETA          .2990    .4270    .5340    .6730    .7800    .8870

  X/C
    .050    .0000             -.0370   -.0490             -.2270
    .250                      -.3140             .0000
    .400             -.2740            -.5030
    .550    .0000             -.4540   -.5670
    .600                                                  -.3440
    .700                               -.3370
    .725                      -.5330
    .750    .0000                                .0000
    .800             -.1370
    .850                               -.0280
    .900                       .0280                      -.0560
    .950    .0000     .0300             .0770

MACH  ( 1) =     .896    BETA  ( 2) =    -3.050

 SECTION ( 1)ORBITER WING                     DEPENDENT VARIABLE CP

ETA          .2990    .4270    .5340    .6730    .7800    .8870

  X/C
    .050    .0000             -.1630   -.1510             -.2900
    .250                      -.3950             .0000
    .400             -.3320            -.5380
    .550    .0000             -.4850   -.6000
    .600                                                  -.3770
    .700                               -.3170
    .725                      -.3900
    .750    .0000                                .0000
    .800             -.1180
    .850                               -.0360
    .900                       .0320                      -.0810
    .950    .0000     .0250             .0620
```

```
DATE 05 NOV 75             TABULATED DATA FOR CAL T14-053 (IA36)                                                    PAGE 761
                                       CAL T14-053 IA36 01 T1 S1  UPPER WING  POWER ON                (UUF103)
MACH  ( 1) =     .907    BETA  ( 3) =     .000
 SECTION ( 1)ORBITER WING                  DEPENDENT VARIABLE CP
ETA         .2990   .4270   .5340   .6730   .7800   .8870
  X/C
    .050    .0000          -.2030  -.1910          -.3440
    .250                   -.4440           .0000
    .400           -.3320          -.5650
    .550    .0000          -.4440  -.5690
    .600                                           -.3180
    .700                           -.1540
    .725                   -.1660
    .750    .0000                           .0000
    .800            .0000
    .850                            .0470
    .900                    .0940                  -.0200
    .950    .0000   .0890           .1350
MACH  ( 1) =     .901    BETA  ( 4) =    3.060
 SECTION ( 1)ORBITER WING                  DEPENDENT VARIABLE CP
ETA         .2990   .4270   .5340   .6730   .7800   .8870
  X/C
    .050    .0000          -.2850  -.2830          -.3840
    .250                   -.5210           .0000
    .400           -.3630          -.6410
    .550    .0000          -.4170  -.5850
    .600                                           -.3530
    .700                           -.1040
    .725                   -.0550
    .750    .0000                           .0000
    .800            .0340
    .850                            .0830
    .900                    .1180                  -.0420
    .950    .0000   .1070           .1590
MACH  ( 1) =     .896    BETA  ( 5) =    6.090
 SECTION ( 1)ORBITER WING                  DEPENDENT VARIABLE CP
ETA         .2990   .4270   .5340   .6730   .7800   .8870
  X/C
    .050    .0000          -.3350  -.3580          -.3930
    .250                   -.5710           .0000
    .400           -.3650          -.7870
    .550    .0000          -.3050  -.3650
    .600                                           -.4220
```

```
                                  CAL T14-053 IA36 O1 T1 S1  UPPER WING  POWER ON              (UUF103)

MACH  ( 1) =     .896   BETA  ( 5) =    6.090

 SECTION ( 1)ORBITER WING                    DEPENDENT VARIABLE CP

ETA          .2990   .4270   .5340   .6730   .7800   .8870

  X/C
    .700                             -.0380
    .725                     -.0070
    .750     .0000                            .0000
    .800             .0800
    .850                              .1280
    .900                      .1430                   -.0850
    .950     .0000   .1400            .1650
```

```
                                    CAL T14-053 IA36 01 T1 S1  UPPER WING  POWER ON             (UUF104)   ( 09 OCT 73  )

          PEFERENCE DATA                                                                        PARAMETRIC DATA

SREF  =  2690.0000 SQ.FT.   XMRP  =   953.0000 IN.                                    ALPHA  =      .000  OPR     =    69.300
LREF  =  1328.0000 IN.      YMRP  =      .0000 IN.                                    SRMPR  =     2.020  GP1     =      .000
BREF  =  1328.0000 IN.      ZMRP  =   400.0000 IN.                                    GY1    =      .000  GP2     =      .000
SCALE =      .0190 SCALE                                                              GY2    =    -3.500  GP3     =      .000
                                                                                      GY3    =     3.500  RUDDER  =    10.000

MACH  ( 1) =      .398    BETA  ( 1) =   -6.090

 SECTION ( 1)ORBITER WING                   DEPENDENT VARIABLE CP

ETA          .2990   .4270   .5340   .6730   .7800   .8870

  X/C
    .050     .0000           -.0460  -.0600          -.2240
     250                     -.3240           .0000
    .400             -.2850          -.5170
     550     .0000           -.4670  -.5790
    .600                                             -.4380
    .700                             -.4790
    .725                     -.6000
    .750     .0000                            .0000
    .800             -.1970
    .850                             -.0520
    .900                      .0040                  -.0900
    .950     .0000    .0000           .0520
MACH  ( 1) =      .898    BETA  ( 2) =   -3.050

 SECTION ( 1)ORBITER WING                   DEPENDENT VARIABLE CP

ETA          .2990   .4270   .5340   .6730   .7800   .8870

  X/C
    .050     .0000           -.1600  -.1480          -.3000
    .250                     -.3920           .0000
    .400             -.3350          -.5340
    .550     .0000           -.4800  -.5930
    .600                                             -.4070
    .700                             -.4230
    .725                     -.4970
    .750     .0000                            .0000
    .800             -.1640
    .850                             -.0530
    .900                      .0230                  -.1020
    .950     .0000    .0210           .0570
```

```
                                      CAL T14-053 IA36 01 T1 S1  UPPER WING  POWER ON                (UUF104)

MACH  ( 1) =      .899    BETA  ( 3) =      .000

 SECTION ( 1)ORBITER WING                      DEPENDENT VARIABLE CP

ETA           .2990   .4270   .5340   .6730   .7800   .8870

  X/C
    .050    .0000           -.2100  -.1970          -.3460
    .250                    -.4540           .0000
    .400            -.3270          -.5800
    .550    .0000           -.4500  -.5770
    .600                                            -.3130
    .700                            -.1540
    .725                    -.2070
    .750    .0000                            .0000
    .800            -.0010
    .850                             .0450
    .900                     .0940                  -.0330
    .950    .0000    .0810           .1250

MACH  ( 1) =      .900    BETA  ( 4) =     3.060

 SECTION ( 1)ORBITER WING                      DEPENDENT VARIABLE CP

ETA           .2990   .4270   .5340   .6730   .7800   .8870

  X/C
    .050    .0000           -.2740  -.2590          -.3730
    .250                    -.5240           .0000
    .400            -.3510          -.6190
    .550    .0000           -.4170  -.5650
    .600                                            -.3310
    .700                            -.0670
    .725                    -.0380
    .750    .0000                            .0000
    .800             .0570
    .850                             .1080
    .900                     .1330                   .0100
    .950    .0000    .1230           .1750

MACH  ( 1) =      .896    BETA  ( 5) =     6.090

 SECTION ( 1)ORBITER WING                      DEPENDENT VARIABLE CP

ETA           .2990   .4270   .5340   .6730   .7800   .8870

  X/C
    .050    .0000           -.3340  -.3700          -.4030
    .250                    -.5690           .0000
    .400            -.3740          -.8290
    .550    .0000           -.3070  -.3810
    .600                                            -.4350
```

```
                                      CAL T14-053 IA36 C1 T1 S1  UPPER WING  POWER ON                (UUF104)

MACH  ( 1) =      .896    BETA  ( 5) =     6.090

 SECTION ( 1)ORBITER WING                       DEPENDENT VARIABLE CP

ETA              .2990     .4270     .5340     .6730     .7800     .8870

  X/C
    .700                                      -.0360
    .725                            -.0080
    .750         .0000                                   .0000
    .800                   .0850
    .850                                       .1300
    .900                             .1410                        -.1320
    .950         .0000     .1470               .1790
```

```
                                    CAL T14-053 IA36 O1 T1 S1  UPPER WING  POWER ON            (UUF105)   ( 09 OCT 75 )

              REFERENCE DATA                                                                    PARAMETRIC DATA

SREF  =  2690.0000 SQ.FT.   XMRP  =   953.0000 IN.                              ALPHA   =       .000   OPR     =    36.200
LREF  =  1328.0000 IN.      YMRP  =      .0000 IN.                              SRMPR   =      2.330   GP1     =      .000
BREF  =  1328.0000 IN.      ZMRP  =   400.0000 IN.                              GY1     =       .000   GP2     =      .000
SCALE =      .0190 SCALE                                                        GY2     =     -3.500   GP3     =      .000
                                                                                GY3     =      3.500   RUDDER  =      .000

MACH  ( 1) =    1.206   BETA  ( 1) =   -6.080

 SECTION ( 1)ORBITER WING                     DEPENDENT VARIABLE CP

ETA          .2990   .4270   .5340   .6730   .7800   .8870

 X/C
   .050     .0000           -.0080   .0590            .0080
   .250                     -.2390           .0000
   .400             -.2600          -.3700
   .550     .0000           -.1360  -.2760
   .600                                              -.5040
   .700                             -.2060
   .725                     -.1840
   .750     .0000                            .0000
   .800             -.2060
   .850                             -.1510
   .900                     -.1430                   -.0990
   .950     .0000   -.0670          -.0470
MACH  ( 1) =    1.202   BETA  ( 2) =   -3.040

 SECTION ( 1)ORBITER WING                     DEPENDENT VARIABLE CP

ETA          .2990   .4270   .5340   .6730   .7800   .8870

 X/C
   .050     .0000           -.0100   .0250            .0010
   .250                     -.2810           .0000
   .400             -.2800          -.4110
   .550     .0000           -.2180  -.4380
   .600                                              -.5200
   .700                             -.2350
   .725                     -.1810
   .750     .0000                            .0000
   .800             -.1970
   .850                             -.1640
   .900                     -.1210                   -.1950
   .950     .0000   -.0650          -.0260
```

```
                                  CAL T14-053 IA36 01 T1 S1  UPPER WING  POWER ON          (UUF105)

MACH  ( 1) =    1.202   BETA  ( 3) =     .000

 SECTION ( 1)ORBITER WING                   DEPENDENT VARIABLE CP

ETA            .2990   .4270   .5340   .6730   .7800   .8870

  X/C
    .050       .0000           .0330   .0230          -.0020
    .250                      -.2750           .0000
    .400              -.2790          -.4210
    .550       .0000          -.3070  -.4410
    .600                                              -.5100
    .700                              -.2740
    .725                      -.1480
    .750       .0000                           .0000
    .800              -.1430
    .850                              -.1180
    .900                      -.0700                  -.2360
    .950       .0000  -.0220           .0130

MACH  ( 1) =    1.197   BETA  ( 4) =    3.050

 SECTION ( 1)ORBITER WING                   DEPENDENT VARIABLE CP

ETA            .2990   .4270   .5340   .6730   .7800   .8870

  X/C
    .050       .0000           .0000   .0040          -.0060
    .250                      -.3230           .0000
    .400              -.2950          -.4570
    .550       .0000          -.3880  -.4840
    .600                                              -.5790
    .700                              -.3350
    .725                      -.1530
    .750       .0000                           .0000
    .800              -.1020
    .850                              -.1460
    .900                      -.0310                  -.3130
    .950       .0000   .0070          -.0030

MACH  ( 1) =    1.207   BETA  ( 5) =    6.080

 SECTION ( 1)ORBITER WING                   DEPENDENT VARIABLE CP

ETA            .2990   .4270   .5340   .6730   .7800   .8870

  X/C
    .050       .0000          -.0380  -.0090           .0130
    .250                      -.3790           .0000
    .400              -.3250          -.5320
    .550       .0000          -.4170  -.5360
    .600                                              -.5740
```

```
                                         CAL T14-053 IA36 01 T1 S1  UPPER WING  POWER ON                (UUF105)

MACH  ( 1) =    1.207    BETA  ( 5) =    6.080

 SECTION ( 1)ORBITER WING                        DEPENDENT VARIABLE CP

ETA          .2990    .4270    .5340    .6730    .7800    .8870

  X/C
    .700                                -.4260
    .725                       -.1880
    .750     .0000                               .0000
    .800             -.0690
    .850                                -.2110
    .900                       -.0140                     -.3920
    .950     .0000    .0610             -.1080
```

```
                                   CAL T14-053 IA36 01 T1 S1  UPPER WING  POWER OFF              (UUF106)    ( 09 OCT 73  )

                REFERENCE DATA                                                               PARAMETRIC DATA

SREF  =  2690.0000 SQ.FT.   XMRP  =   953.0000 IN.                          ALPHA  =      .000  GP1     =     .000
LREF  =  1328.0000 IN.      YMRP  =      .0000 IN.                          GY1    =      .000  GP2     =     .000
BREF  =  1328.0000 IN.      ZMRP  =   400.0000 IN.                          GY2    =    -3.500  GP3     =     .000
SCALE =      .0190 SCALE                                                    GY3    =     3.500  RUDDER  =     .000

MACH  ( 1) =    1.208    BETA  ( 1) =   -6.080

 SECTION ( 1)ORBITER WING                  DEPENDENT VARIABLE CP

ETA          .2990   .4270   .5340   .6730   .7800   .8870

  X/C
    .050     .0000          -.0160   .0410           -.0050
    .250                    -.2580           .0000
    .400            -.2730           -.3890
    .550     .0000          -.1500   -.2750
    .600                                             -.5100
    .700                             -.2180
    .725                    -.1970
    .750     .0000                           .0000
    .800            -.2230
    .850                             -.1980
    .900                    -.1600                   -.1160
    .950     .0000  -.0920           -.0680

MACH  ( 1) =    1.206    BETA  ( 2) =   -3.050

 SECTION ( 1)ORBITER WING                  DEPENDENT VARIABLE CP

ETA          .2990   .4270   .5340   .6730   .7800   .8870

  X/C
    .050     .0000          -.0160   .0160           -.0110
    .250                    -.2840           .0000
    .400            -.2880           -.4160
    .550     .0000          -.2100   -.4370
    .600                                             -.5210
    .700                             -.2490
    .725                    -.1870
    .750     .0000                           .0000
    .800            -.2040
    .850                             -.1790
    .900                    -.1310                   -.2040
    .950     .0000  -.0810           -.0380
```

```
                 CAL T14-053 IA36 O1 T1 S1  UPPER WING  POWER OFF            (UUF106)

MACH  ( 1) =    1.206    BETA  ( 3) =     .000

 SECTION ( 1)ORBITER WING                  DEPENDENT VARIABLE CP

ETA         .2990   .4270   .5340   .6730   .7800   .8870

 X/C
   .050     .0000           .0180   .0060          -.0160
   .250                    -.2960           .0000
   .400            -.2930          -.4290
   .550     .0000          -.3280  -.4490
   .600                                            -.5180
   .700                            -.2930
   .725                    -.1600
   .750     .0000                           .0000
   .800            -.1590
   .850                            -.1410
   .900                    -.0820                  -.2440
   .950     .0000  -.0460          -.0040

MACH  ( 1) =    1.206    BETA  ( 4) =    3.050

 SECTION ( 1)ORBITER WING                  DEPENDENT VARIABLE CP

ETA         .2990   .4270   .5340   .6730   .7800   .8870

 X/C
   .050     .0000          -.0100  -.0100          -.0120
   .250                    -.3340           .0000
   .400            -.3010          -.4570
   .550     .0000          -.3930  -.4910
   .600                                            -.5750
   .700                            -.3590
   .725                    -.1580
   .750     .0000                           .0000
   .800            -.1160
   .850                            -.1650
   .900                    -.0420                  -.3290
   .950     .0000  -.0140          -.0240

MACH  ( 1) =    1.205    BETA  ( 5) =    6.080

 SECTION ( 1)ORBITER WING                  DEPENDENT VARIABLE CP

ETA         .2990   .4270   .5340   .6730   .7800   .8870

 X/C
   .050     .0000          -.0580  -.0280          -.0070
   .250                    -.3960           .0000
   .400            -.3420          -.5370
   .550     .0000          -.4350  -.5460
   .600                                            -.5840
```

```
DATE 05 NOV 75             TABULATED DATA FOR CAL T14-053 (IA36)                                                    PAGE  771
                                       CAL T14-053 IA36 01 T1 S1  UPPER WING  POWER OFF                (UUF106)
MACH  ( 1) =    1.205    BETA  ( 5) =    6.080
 SECTION ( 1)ORBITER WING                    DEPENDENT VARIABLE CP
ETA         .2990   .4270   .5340   .6730   .7800   .8870

  X/C
    .700                           -.4410
    .725                   -.2060
    .750    .0000                           .0000
    .800           -.1040
    .850                           -.2300
    .900                   -.0270                  -.4180
    .950    .0000   .0310          -.1330
```

```
                              CAL T14-053 IA36 O1 T1 S1  UPPER WING  POWER OFF          (UUF107,   ( 09 OCT 73  )

              REFERENCE DATA                                                              PARAMETRIC DATA

SREF  =  2690.0000 SQ.FT.   XMRP  =   953.0000 IN.                         ALPHA  =      .000   GP1    =      .000
LREF  =  1328.0000 IN.      YMRP  =      .0000 IN.                         GY1    =      .000   GP2    =      .000
BREF  =  1328.0000 IN.      ZMRP  =   400.0000 IN.                         GY2    =    -3.500   GP3    =      .000
SCALE =      .0190 SCALE                                                   GY3    =     3.500   RUDDER =      .000

MACH  ( 1) =     .906    BETA  ( 1) =   -6.080

 SECTION ( 1)ORBITER WING                         DEPENDENT VARIABLE CP

ETA          .2990     .4270     .5340     .6730     .7800     .8870

 X/C
   .050      .0000              -.0800    -.0830              -.2320
   .250                         -.3500               .0000
   .400               -.2990              -.5130
   .550      .0000              -.4790    -.5820
   .600                                                       -.3100
   .700                                   -.3820
   .725                         -.4700
   .750      .0000                                   .0000
   .800               -.1580
   .850                                   -.0590
   .900                          .0180                        -.0760
   .950      .0000     .0070               .0470

MACH  ( 1) =     .911    BETA  ( 2) =   -3.050

 SECTION ( 1)ORBITER WING                         DEPENDENT VARIABLE CP

ETA          .2990     .4270     .5340     .6730     .7800     .8870

 X/C
   .050      .0000              -.1790    -.1470              -.3040
   .250                         -.3990               .0000
   .400               -.3260              -.5290
   .550      .0000              -.4730    -.5830
   .600                                                       -.3830
   .700                                   -.3140
   .725                         -.4520
   .750      .0000                                   .0000
   .800               -.1110
   .850                                   -.0420
   .900                          .0330                        -.0860
   .950      .0000     .0320               .0670
```

```
                              CAL T14-053 IA36 01 T1 S1  UPPER WING  POWER OFF          (UUF107)

MACH  ( 1) =     .900    BETA  ( 3) =     .000

 SECTION ( 1)ORBITER WING                      DEPENDENT VARIABLE CP

ETA          .2990     .4270     .5340     .6730     .7800     .8870

  X/C
   .050      .0000              -.2460    -.2380              -.3680
   .250                         -.4930               .0000
   .400               -.3640              -.6020
   .550      .0000              -.4820    -.6040
   .600                                                       -.3410
   .700                                   -.2360
   .725                         -.1820
   .750      .0000                                   .0000
   .800               -.0590
   .850                                   -.0130
   .900                          .0670                        -.0760
   .950      .0000     .0410               .0810

MACH  ( 1) =     .901    BETA  ( 4) =    3.050

 SECTION ( 1)ORBITER WING                      DEPENDENT VARIABLE CP

ETA          .2990     .4270     .5340     .6730     .7800     .8870

  X/C
   .050      .0000              -.2920    -.2800              -.3870
   .250                         -.5630               .0000
   .400               -.3760              -.6260
   .550      .0000              -.4470    -.5910
   .600                                                       -.3510
   .700                                   -.1140
   .725                         -.0570
   .750      .0000                                   .0000
   .800                .0170
   .850                                    .0630
   .900                          .1120                        -.0190
   .950      .0000     .0870               .1360

MACH  ( 1) =     .903    BETA  ( 5) =    6.090

 SECTION ( 1)ORBITER WING                      DEPENDENT VARIABLE CP

ETA          .2990     .4270     .5340     .6730     .7800     .8870

  X/C
   .050      .0000              -.3430    -.3590              -.4020
   .250                         -.5780               .0000
   .400               -.3760              -.7870
   .550      .0000              -.3580    -.3640
   .600                                                       -.4290
```

```
                                       CAL T14-053 IA36 01 T1 S1  UPPER WING  POWER OFF               (UUF107)

MACH  ( 1) =     .903    BETA  ( 5) =    6.090

 SECTION ( 1)ORBITER WING                 DEPENDENT VARIABLE CP

ETA         .2990   .4270   .5340   .6730   .7800   .8870

  X/C
    .700                           -.0490
    .725                   -.0120
    .750    .0000                           .0000
    .800            .0670
    .850                            .1020
    .900                    .1370                  -.0820
    .350    .0000   .1220           .1320
```

```
                                   CAL T14-053 IA36 01 T1 S1  UPPER WING  POWER ON                 (UUF108)   ( 09 OCT 73  )

            REFERENCE DATA                                                                      PARAMETRIC DATA

SREF  =  2690.0000 SQ.FT.   XMRP  =   953.0000 IN.                              ALPHA  =       .000   OPR     =    28.310
LREF  =  1328.0000 IN.      YMRP  =      .0000 IN.                              SRMPR  =      2.020   GP1     =      .000
BREF  =  1328.0000 IN.      ZMRP  =   400.0000 IN.                              GY1    =       .000   GP2     =      .000
SCALE =       .0190 SCALE                                                       GY2    =     -3.500   GP3     =      .000
                                                                                GY3    =      3.500   RUDDER  =      .000

MACH  ( 1) =      .901    BETA  ( 1) =   -6.080

 SECTION ( 1)ORBITER WING                    DEPENDENT VARIABLE CP

ETA          .2990    .4270    .5340    .6730    .7800    .8870

  X/C
   .050     .0000             -.0650   -.0580            -.2400
   .250                       -.3320             .0000
   .400              -.2760            -.5030
   .550     .0000             -.4650   -.5700
   .600                                                  -.3300
   .700                                -.4020
   .725                       -.4680
   .750     .0000                                .0000
   .800              -.1560
   .850                                -.0430
   .900                        .0270                     -.0630
   .950     .0000     .0210             .0620

MACH  ( 1) =      .889    BETA  ( 2) =   -3.050

 SECTION ( 1)ORBITER WING                    DEPENDENT VARIABLE CP

ETA          .2990    .4270    .5340    .6730    .7800    .8870

  X/C
   .050     .0000             -.1760   -.1550            -.3200
   .250                       -.4090             .0000
   .400              -.3480            -.5570
   .550     .0000             -.4980   -.6170
   .600                                                  -.3740
   .700                                -.3150
   .725                       -.3830
   .750     .0000                                .0000
   .800              -.1280
   .850                                -.0430
   .900                        .0230                     -.1090
   .950     .0000     .0180             .0650
```

```
DATE 05 NOV 75            TABULATED DATA FOR CAL T14-053 (1A36)                    (UUF108)
                                  CAL T14-053 1A36 C1 T1 S1  UPPER WING  POWER ON

MACH  ( 1) =     .900    BETA  ( 3) =     .000
                                         DEPENDENT VARIABLE CP
  SECTION ( 1)ORBITER WING

  ETA          .2990    .4270    .5340    .6730    .7800    .8870

    X/C
     .050      .0000             -.2170   -.2090            -.3530
     .250                        -.4370             .0000
     .400               -.3460            -.5730
     .550      .0000             -.4490   -.5840
     .600                                                   -.3460
     .700                                 -.2140
     .725                        -.1660
     .750      .0000                                .0000
     .800               -.0370
     .850                                  .0120
     .900                         .0840                     -.0420
     .950      .0000     .0690             .1120

MACH  ( 1) =     .896    BETA  ( 4) =    3.060
                                         DEPENDENT VARIABLE CP
  SECTION ( 1)ORBITER WING

  ETA          .2990    .4270    .5340    .6730    .7800    .8870

    X/C
     .050      .0000             -.2820   -.2920            -.3920
     .250                        -.5270             .0000
     .400               -.3700            -.6250
     .550      .0000             -.4350   -.5900
     .600                                                   -.3590
     .700                                 -.0870
     .725                        -.0540
     .750      .0000                                .0000
     .800                .0410
     .850                                  .0880
     .900                         .1230                     -.0030
     .950      .0000     .1040             .1590

MACH  ( 1) =     .902    BETA  ( 5) =    6.090
                                         DEPENDENT VARIABLE CP
  SECTION ( 1)ORBITER WING

  ETA          .2990    .4270    .5340    .6730    .7800    .8870

    X/C
     .050      .0000             -.3340   -.3670            -.3960
     .250                        -.5580             .0000
     .400               -.3640            -.8040
     .550      .0000             -.3030   -.3610
     .600                                                   -.4350
```

```
DATE 05 NOV 75           TABULATED DATA FOR CAL T14-053 (IA36)                                          PAGE  777

                                  CAL T14-053 IA36 01 T1 S1  UPPER WING  POWER ON                (UUF108)

MACH  ( 1) =      .902    BETA  ( 5) =     6.090

 SECTION ( 1)ORBITER WING                  DEPENDENT VARIABLE CP

ETA          .2990     .4270     .5340     .6730     .7800     .8870

  X/C
   .700                                   -.0280
   .725                          .0000
   .750      .0000                                   .0000
   .800                .0910
   .850                                    .1290
   .900                          .1520                        -.1210
   .950      .0000     .1510               .1690
```

```
DATE 05 NOV 75
                         TABULATED DATA FOR CAL T14-053 (IA36)
                                  CAL T14-053 IA36 01 T1 S1  UPPER WING  POWER ON                PAGE  778
               REFERENCE DATA                                                              (UUF109)   ( 09 OCT 73
 SREF  =  2690.0000 SQ.FT.                                                                 PARAMETRIC DATA
 LREF  =  1328.0000 IN.      XMRP  =   953.0000 IN.                              BETA   =     .000   OPR  =   36.200
 BREF  =  1328.0000 IN.      YMRP  =     .0000 IN.                               SRMPR  =    2.330   GP1  =   11.000
 SCALE =     .0190 SCALE     ZMRP  =   400.0000 IN.                              GP2    =   11.000   GY2  =   -3.500
                                                                                 GP3    =   11.000   GY3  =    3.500
 MACH  ( 1) =     1.204    ALPHA ( 1) =     -.120                                GP4    =    7.000   GP5  =    7.000
  SECTION ( 1)ORBITER WING
 ETA                                                DEPENDENT VARIABLE CP
            .2990    .4270    .5340    .6730    .7800    .8870
  X/C
   .050     .0000
   .250                       .0400    .0210
   .400                      -.2810
   .550     .0000   -.2740                      .0000    .0040
   .600                                -.4180
   .700                      -.3090    -.4370
   .725
   .750     .0000            -.1380    -.2710            -.5030
   .800
   .850              -.1410                     .0000
   .900
   .950     .0000   -.0240   -.0690    -.1220
                                        .0210            -.2350
 MACH  ( 1) =     1.203    ALPHA ( 2) =     4.040
  SECTION ( 1)ORBITER WING
 ETA                                                DEPENDENT VARIABLE CP
            .2990    .4270    .5340    .6730    .7800    .8870
  X/C
   .050     .0000
   .250                      -.1550    -.1630
   .400                      -.3850
   .550     .0000   -.3310                      .0000    -.1890
   .600                                -.5640
   .700                      -.4300    -.5320
   .725
   .750     .0000            -.2240    -.4470            -.6230
   .800
   .850              -.1730                     .0000
   .900
   .950     .0000   -.0460   -.1100    -.2330
                                       -.0990            -.4640
                                       CAL T14-053 IA36 01 T1 S1  UPPER WING  POWER ON                (UUF109)

MACH  ( 1) =    1.207    ALPHA ( 3) =    5.920

 SECTION ( 1)ORBITER WING                    DEPENDENT VARIABLE CP

ETA         .2990   .4270   .5340   .6730   .7800   .8870

  X/C
    .050    .0000          -.2290  -.2480          -.2630
    .250                   -.5060           .0000
    .400           -.3540          -.6060
    .550    .0000          -.4640  -.5940
    .600                                           -.6710
    .700                           -.5150
    .725                   -.2720
    .750    .0000                           .0000
    .800           -.1940
    .850                           -.2800
    .900                   -.1410                  -.5060
    .950    .0000  -.0570          -.1800
```

```
DATE 05 NOV 75            TABULATED DATA FOR CAL T14-053 (IA36)                                                          PAGE  780

                                         CAL T14-053 IA36 01 T1 S1  UPPER WING  POWER ON                  (UUF110)   ( 09 OCT 73  )

                REFERENCE DATA                                                                            PARAMETRIC DATA

SREF  =  2690.0000 SQ.FT.   XMRP  =    953.0000 IN.                                 ALPHA   =      .000   CPR    =     36.200
LREF  =  1328.0000 IN.      YMRP  =      .0000 IN.                                  SHMPR   =     2.330   GP1    =     11.000
BREF  =  1328.0000 IN.      ZMRP  =    400.0000 IN.                                 GP2     =    11.000   GY2    =     -3.500
SCALE =      .0190 SCALE                                                            GP3     =    11.000   GY3    =      3.500
                                                                                    GP4     =     7.000   GP5    =      7.000

MACH  ( 1) =     1.202     BETA  ( 1) =    -6.080

 SECTION ( 1)ORBITER WING                          DEPENDENT VARIABLE CP

ETA           .2990    .4270    .5340    .6730    .7800    .8970

  X/C
    .050     .0000             -.0020    .0660             .0040
    .250                       -.2340             .0000
    .400              -.2570             -.3670
    .550     .0000             -.1190    -.2060
    .600                                                   -.5060
    .700                                 -.2050
    .725                       -.1860
    .750     .0000                                .0000
    .800              -.2070
    .850                                 -.1830
    .900                       -.1460                      -.0810
    .950     .0000    -.0690             -.0440

MACH  ( 1) =     1.209     BETA  ( 2) =    -3.040

 SECTION ( 1)ORBITER WING                          DEPENDENT VARIABLE CP

ETA           .2990    .4270    .5340    .6730    .7800    .8870

  X/C
    .050     .0000              .0050    .0370             .0140
    .250                       -.2650             .0000
    .400              -.2660             -.3360
    .550     .0000             -.1850    -.4200
    .600                                                   -.5090
    .700                                 -.2190
    .725                       -.1660
    .750     .0000                                .0000
    .800              -.1840
    .850                                 -.1540
    .900                       -.1110                      -.1850
    .950     .0000    -.0550             -.0100
```

```
                                 CAL T14-053 IA36 O1 T1 S1  UPPER WING  POWER ON              (UUF110)

MACH  ( 1) =    1.207    BETA  ( 3) =     .000

 SECTION ( 1)ORBITER WING                       DEPENDENT VARIABLE CP

ETA         .2990    .4270    .5340    .6730    .7800    .8870

  X/C
    .050    .0000             .0410    .0330             .0050
    .250                     -.2730             .0000
    .400            -.2690            -.4150
    .550    .0000            -.3080   -.4330
    .600                                                -.5060
    .700                              -.2700
    .725                     -.1400
    .750    .0000                               .0000
    .800            -.1380
    .850                              -.1160
    .900                     -.0620                     -.2340
    .950    .0000   -.0200             .0240

MACH  ( 1) =    1.210    BETA  ( 4) =    3.050

 SECTION ( 1)ORBITER WING                       DEPENDENT VARIABLE CP

ETA         .2990    .4270    .5340    .6730    .7800    .8870

  X/C
    .050    .0000             .0210    .0140             .0070
    .250                     -.3140             .0000
    .400            -.2830            -.4360
    .550    .0000            -.3800   -.4710
    .600                                                -.5620
    .700                              -.3520
    .725                     -.1360
    .750    .0000                               .0000
    .800            -.0960
    .850                              -.1360
    .900                     -.0130                     -.3300
    .950    .0000    .0160             .0140

MACH  ( 1) =    1.204    BETA  ( 5) =    6.080

 SECTION ( 1)ORBITER WING                       DEPENDENT VARIABLE CP

ETA         .2990    .4270    .5340    .6730    .7800    .8870

  X/C
    .050    .0000            -.0380   -.0140             .0080
    .250                     -.3880             .0000
    .400            -.3250            -.5300
    .550    .0000            -.4270   -.5420
    .600                                                -.5760
```

```
DATE 05 NOV 75            TABULATED DATA FOR CAL T14-053 (IA36)                                                        PAGE  792

                                    CAL T14-053 IA36 01 T1 S1  UPPER WING  POWER ON                 (UUF110)

MACH  ( 1) =    1.204    BETA  ( 5) =    6.080

 SECTION ( 1)ORBITER WING                     DEPENDENT VARIABLE CP

ETA          .2990   .4270   .5340   .6730   .7800   .8870

  X/C
   .700                              -.4390
   .725                      -.1830
   .750     .0000                            .0000
   .800             -.0730
   .850                              -.2000
   .900                      .0000                   -.4570
   .950     .0000   .0630            -.1020
```

```
DATE 05 NOV 75             TABULATED DATA FOR CAL T14-053 (IA36)                                                    PAGE  783
                                       CAL T14-053 IA36 01 T1 S1  UPPER WING  POWER ON                (UUF111)   ( 09 OCT 73  )

              REFERENCE DATA                                                    PARAMETRIC DATA

SREF  =  2690.0000 SQ.FT.   XMRP  =    953.0000 IN.                   BETA   =      .000  OPR    =      28.310
LREF  =  1328.0000 IN.      YMRP  =      .0000 IN.                    SRMPR  =     2.020  GP1    =      11.000
BREF  =  1328.0000 IN.      ZMRP  =    400.0000 IN.                   GP2    =    11.000  GY2    =      -3.500
SCALE =      .0190 SCALE                                              GP3    =    11.000  GY3    =       3.500
                                                                      GP4    =     7.000  GP5    =       7.000

MACH  ( 1) =      .900    ALPHA ( 1) =    -8.110

 SECTION ( 1)ORBITER WING                  DEPENDENT VARIABLE CP

ETA         .2990   .4270   .5340   .6730   .7800   .8870

  X/C
    .050    .0000           .2860   .2780           .1740
    .250                   -.1000           .0000
    .400           -.1320          -.3350
    .550    .0000          -.3200  -.4220
    .600                                           -.6000
    .700                           -.1840
    .725                   -.1580
    .750    .0000                           .0000
    .800           -.0070
    .850                            .1050
    .900                    .0920                   .1120
    .950    .0000   .0460           .1350

MACH  ( 1) =      .899    ALPHA ( 2) =    -4.120

 SECTION ( 1)ORBITER WING                  DEPENDENT VARIABLE CP

ETA         .2990   .4270   .5340   .6730   .7800   .8870

  X/C
    .050    .0000           .0870   .0760          -.0180
    .250                   -.2790           .0000
    .400           -.2230          -.4460
    .550    .0000          -.3900  -.5170
    .600                                           -.6240
    .700                           -.3170
    .725                   -.2890
    .750    .0000                           .0000
    .800           -.0370
    .850                            .0590
    .900                    .0840                   .0590
    .950    .0000   .0490           .1250
```

```
                                       CAL T14-053 IA36 01 T1 S1  UPPER WING  POWER ON             (UUF111)

MACH  ( 1) =     .904   ALPHA ( 3) =    -.100

 SECTION ( 1)ORBITER WING                         DEPENDENT VARIABLE CP

ETA           .2990   .4270   .5340   .6730   .7800   .8870

  X/C
    .050    .0000           -.1950  -.1690          -.3330
    .250                    -.4380           .0000
    .400            -.3280          -.5880
    .550    .0000           -.4430  -.5740
    .600                                            -.5070
    .700                            -.2460
    .725                    -.3080
    .750    .0000                            .0000
    .800            -.0420
    .850                             .0080
    .900                     .0700                  -.0560
    .950    .0000    .0630           .1110
MACH  ( 1) =     .901   ALPHA ( 4) =    3.970

 SECTION ( 1)ORBITER WING                         DEPENDENT VARIABLE CP

ETA           .2990   .4270   .5340   .6730   .7800   .8870

  X/C
    .050    .0000           -.4570  -.5430          -.6210
    .250                    -.6410           .0000
    .400            -.4300          -.8500
    .550    .0000           -.5150  -.6500
    .600                                            -.5910
    .700                            -.2290
    .725                    -.1430
    .750    .0000                            .0000
    .800            -.0620
    .850                            -.0580
    .900                     .0390                  -.4030
    .950    .0000    .0910           .0420
MACH  ( 1) =     .902   ALPHA ( 5) =    5.990

 SECTION ( 1)ORBITER WING                         DEPENDENT VARIABLE CP

ETA           .2990   .4270   .5340   .6730   .7600   .8870

  X/C
    .050    .0000           -.5730  -.6700          -.7340
    .250                    -.7530           .0000
    .400            -.5180          -.9370
    .550    .0000           -.4890  -.5310
    .600                                            -.5800
```

```
                                         CAL T14-053 IA36 01 T1 S1  UPPER WING  POWER ON              (UUF111)

MACH  ( 1) =     .902   ALPHA ( 5) =    5.990

 SECTION ( 1)ORBITER WING                     DEPENDENT VARIABLE CP

ETA          .2990   .4270   .5340   .6730   .7800   .8870

  X/C
    .700                             -.3180
    .725                     -.1670
    .750     .0000                           .0000
    .800             -.0370
    .850                             -.1790
    .900                      .0400                  -.5110
    .950     .0000    .0920          -.0560
```

```
                              CAL T14-053 IA36 01 T1 S1  UPPER WING  POWER ON                 (UUF112)    ( 09 OCT 73  )

            REFERENCE DATA                                                                   PARAMETRIC DATA

SREF  =  2690.0000 SQ.FT.    XMRP  =    953.0000 IN.                     ALPHA  =      .000   OPR     =     28.310
LREF  =  1328.0000 IN.       YMRP  =       .0000 IN.                     SRMPR  =     2.020   GP1     =     11.000
BREF  =  1328.0000 IN.       ZMRP  =    400.0000 IN.                     GP2    =    11.000   GY2     =     -3.500
SCALE =       .0190 SCALE                                                GP3    =    11.000   GY3     =      3.500
                                                                         GP4    =     7.000   GP5     =      7.000

MACH  ( 1) =      .901    BETA  ( 1) =    -6.080

 SECTION ( 1)ORBITER WING                   DEPENDENT VARIABLE CP

ETA         .2990   .4270   .5340   .6730   .7800   .8870

  X/C
    .050    .0000          -.0340  -.0670          -.1980
    .250                   -.3220           .0000
    .400           -.2830          -.5070
    .550    .0000          -.4630  -.5710
    .600                                           -.6440
    .700                           -.6330
    .725                   -.6030
    .750    .0000                           .0000
    .800           -.2530
    .850                           -.0720
    .900                   -.0070                  -.1010
    .950    .0000  -.0040           .0380
MACH  ( 1) =      .904    BETA  ( 2) =    -3.050

 SECTION ( 1)ORBITER WING                   DEPENDENT VARIABLE CP

ETA         .2990   .4270   .5340   .6730   .7800   .8870

  X/C
    .050    .0000          -.1450  -.1370          -.2940
    .250                   -.3780           .0000
    .400           -.3200          -.5320
    .550    .0000          -.4710  -.5850
    .600                                           -.6680
    .700                           -.4570
    .725                   -.5550
    .750    .0000                           .0000
    .800           -.1560
    .850                           -.0490
    .900                    .0100                  -.1040
    .950    .0000   .0340           .0450
```

```
              TABULATED DATA FOR CAL T14-053 (IA36)

                           CAL T14-053 IA36 01 T1 S1  UPPER WING  POWER ON          (UUF112)

MACH  ( 1) =    .902   BETA  ( 3) =    .000

 SECTION ( 1)ORBITER WING                DEPENDENT VARIABLE CP

ETA        .2990   .4270   .5340   .6730   .7800   .8870

  X/C
    .050   .0000          -.1850  -.2050          -.3340
    .250                  -.4540           .0000
    .400          -.3420          -.5830
    .550   .0000          -.4580  -.5840
    .600                                          -.5010
    .700                          -.2960
    .725                  -.2890
    .750   .0000                           .0000
    .800          -.0670
    .850                          -.0170
    .900                   .0630                  -.0820
    .950   .0000   .0500           .0890

MACH  ( 1) =    .900   BETA  ( 4) =   3.050

 SECTION ( 1)ORBITER WING                DEPENDENT VARIABLE CP

ETA        .2990   .4270   .5340   .6730   .7800   .8870

  X/C
    .050   .0000          -.2590  -.2750          -.3810
    .250                  -.5400           .0000
    .400          -.3570          -.6350
    .550   .0000          -.4310  -.5770
    .600                                          -.3560
    .700                          -.0950
    .725                  -.0620
    .750   .0000                           .0000
    .800           .0410
    .850                           .0800
    .900                   .1160                   .0080
    .950   .0000   .1040           .1510

MACH  ( 1) =    .899   BETA  ( 5) =   6.090

 SECTION ( 1)ORBITER WING                DEPENDENT VARIABLE CP

ETA        .2990   .4270   .5340   .6730   .7800   .8870

  X/C
    .050   .0000          -.3310  -.3500          -.3910
    .250                  -.5650           .0000
    .400          -.3630          -.7900
    .550   .0000          -.3140  -.4040
    .600                                          -.4280
```

```
DATE 05 NOV 75            TABULATED DATA FOR CAL T14-053 (IA36)                                    (UUF112)
                                 CAL T14-053 IA36 01 T1 S1  UPPER WING  POWER ON

MACH  ( 1) =     .899   BETA  ( 5) =     6.090
                                        DEPENDENT VARIABLE CP
 SECTION ( 1)ORBITER WING

ETA          .2990    .4270    .5340    .6730    .7800    .8870

  X/C
   .700                                 -.0340
   .725                        -.0070
   .750      .0000                               .0000
   .800               .0820
   .850                                  .1300
   .900                         .1400                     -.0500
   .950      .0000    .1410              .1660
```

```
DATE 05 NOV 75            TABULATED DATA FOR CAL T14-053 (IA36)                                                      PAGE  789

                                       CAL T14-053 IA36 01 T1 S1  UPPER WING  POWER ON                  (UUF113)   ( 09 OCT 73  )

              REFERENCE DATA                                                                                  PARAMETRIC DATA

SREF  =  2690.0000 SQ.FT.   XMRP  =   953.0000 IN.                                    BETA    =      .000  OPR     =    36.200
LREF  =  1328.0000 IN.      YMRP  =      .0000 IN.                                    SRMPR   =     2.330  GP1     =   -11.000
BREF  =  1328.0000 IN.      ZMRP  =   400.0000 IN.                                    GP2     =    -8.000  GY2     =    -3.500
SCALE =      .0190 SCALE                                                              GP3     =    -8.000  GY3     =     3.500
                                                                                      GP4     =    -7.000  GP5     =    -7.000

MACH  ( 1) =    1.204    ALPHA ( 1) =   -8.030

 SECTION ( 1)ORBITER WING                        DEPENDENT VARIABLE CP

ETA          .2990    .4270    .5340    .6730    .7800    .8870

  X/C
    .050     .0000             .3210    .3680             .3360
    .250                      -.0640             .0000
    .400             -.0230             -.1370
    .550     .0000             .0250     .0030
    .600                                                 -.1720
    .700                                -.1170
    .725                      -.0850
    .750     .0000                                .0000
    .800             -.0610
    .850                                -.0970
    .900                       .0280                     -.0040
    .950     .0000    .0990              .0910
MACH  ( 1) =    1.209    ALPHA ( 2) =   -4.010

 SECTION ( 1)ORBITER WING                        DEPENDENT VARIABLE CP

ETA          .2990    .4270    .5340    .6730    .7800    .8870

  X/C
    .050     .0000             .1810     .2240             .1870
    .250                      -.1550              .0000
    .400             -.1780             -.2950
    .550     .0000            -.0490    -.1860
    .600                                                 -.4320
    .700                                -.1450
    .725                      -.1100
    .750     .0000                                .0000
    .800             -.0960
    .850                                -.1060
    .900                      -.0180                      .0030
    .950     .0000    .0300              .0710
```

```
                                   CAL T14-053 IA36 01 T1 S1  UPPER WING  POWER ON          (UUF113)

MACH  ( 1) =     1.209    ALPHA ( 3) =      .010

 SECTION ( .)ORBITER WING                    DEPENDENT VARIABLE CP

ETA           .2930   .4270   .5340   .6730   .7800   .8870

  X/C
    .050    .0000           .0380   .0210           .0030
    .250                   -.2750           .0000
    .400           -.2710          -.4140
    .550    .0000          -.3270  -.4370
    .600                                          -.5060
    .700                           -.2700
    .725                   -.1370
    .750    .0000                           .0000
    .800           -.1340
    .850                           -.1150
    .900                   -.0630                 -.2370
    .950    .0000  -.0130           .0310
MACH  ( 1) =     1.201    ALPHA ( 4) =     3.990

 SECTION ( 1)ORBITER WING                    DEPENDENT VARIABLE CP

ETA           .2990   .4270   .5340   .673U   .7800   .8870

  X/C
    .050    .0000          -.1650  -.1700          -.1940
    .250                   -.4150           .0000
    .400           -.3340          -.5700
    .550    .0000          -.4430  -.5450
    .600                                          -.6270
    .700                           -.4840
    .725                   -.2260
    .750    .0000                           .0000
    .800           -.1830
    .850                           -.2410
    .900                   -.1080                 -.5640
    .950    .0000  -.0470          -.1010
MACH  ( 1) =     1.204    ALPHA ( 5) =     6.000

 SECTION ( 1)ORBITER WING                    DEPENDENT VARI BLE CP

ETA           .2990   .4270   .5340   .6730   .7800   .8870

  X/C
    .050    .0000          -.2370  -.2580          -.2720
    .250                   -.5080           .0000
    .400           -.3530          -.6150
    .550    .0000          -.4690  -.6150
    .600                                          -.6800
```

REPRODUCIBILITY OF THE
ORIGINAL PAGE IS POOR

```
DATE 05 NOV 75            TABULATED DATA FOR CAL T14-053 (IA36)                                                      PAGE  791

                                         CAL T14-053 IA36 O1 T1 S1  UPPER WING  POWER ON                (UUF113)

MACH  ( 1) =    1.204   ALPHA ( 5) =    6.000

 SECTION ( 1)ORBITER WING                      DEPENDENT VARIABLE CP

ETA          .2990    .4270    .5340    .6730    .7800    .8870

  X/C
    .700                                -.5430
    .725                       -.2690
    .750     .0000                               .0000
    .800              -.2080
    .850                                -.2730
    .900                       -.1320                      -.6220
    .950     .0000    -.0570            -.1680
```

```
                                       CAL T14-053 IA36 01 T1 S1  UPPER WING  POWER ON              (UUF114)   ( 09 OCT 73  )

              REFERENCE DATA                                                                          PARAMETRIC DATA

SPEF  =  2690.0000 SQ.FT.   XMRP  =    953.0000 IN.                             ALPHA   =       .000   OPR    =     36.200
LPEF  =  1328.0000 IN.      YMRP  =       .0000 IN.                             SRMPR   =      2.330   GP1    =    -11.000
BPEF  =  1328.0000 IN.      ZMRP  =    400.0000 IN.                             GP2     =     -8.000   GY2    =     -3.500
SCALE =      .0190 SCALE                                                        GP3     =     -8.000   GY3    =       .500
                                                                                GP4     =     -7.000   GP5    =     - .000

MACH  ( 1) =    1.207   BETA  ( 1) =   -6.070

 SECTION ( 1)ORBITER WING                   DEPENDENT VARIABLE CP

ETA          .2990   .4270   .5340   .6730   .7800   .8870

  X/C
    .050     .0000           -.0060   .0570           .0050
    .250                     -.2390           .0000
    .400             -.2550          -.3720
    .550     .0000           -.1320  -.2620
    .600                                             -.5050
    .700                             -.2000
    .725                     -.1840
    .750     .0000                            .0000
    .800             -.2070
    .850                             -.1830
    .900                     -.1470                  -.0910
    .950     .0000   -.0690          -.0490
MACH  ( 1) =    1.203   BETA  ( 2) =   -3.040

 SECTION ( 1)ORBITER WING                   DEPENDENT VARIABLE CP

ETA          .2990   .4270   .5340   .6730   .7800   .8870

  X/C
    .050     .0000           -.0090   .0230          -.0050
    .250                     -.2810           .0000
    .400             -.2780          -.4060
    .550     .0000           -.2090  -.4350
    .600                                             -.5210
    .700                             -.2310
    .725                     -.1730
    .750     .0000                            .0000
    .800             -.1880
    .850                             -.1590
    .900                     -.1180                  -.1980
    .950     .0000   -.0580          -.0080
```

```
                                                CAL T14-053 IA36 01 T1 S1  UPPER WING  POWER ON                (UUF114)

MACH  ( 1) =    1.200    BETA  ( 3) =      .000

 SECTION ( 1)ORBITER WING                     DEPENDENT VARIABLE CP

ETA          .2990   .4270   .5340   .6730   .7800   .8870

  X/C
    .050     .0000           .0250   .0080           -.0100
    .250                    -.2840           .0000
    .400            -.2820          -.4270
    .550     .0000          -.3450  -.4440
    .600                                             -.5230
    .700                            -.2850
    .725                    -.1440
    .750     .0000                           .0000
    .800            -.1470
    .850                            -.1330
    .900                    -.0720                   -.2530
    .950     .0000  -.0290           .0190
MACH  ( 1) =    1.204    BETA  ( 4) =     3.050

 SECTION ( 1)ORBITER WING                     DEPENDENT VARIABLE CP

ETA          .2990   .4270   .5340   .6730   .7800   .8870

  X/C
    .050     .0000           .0010   .0040            .0010
    .250                    -.3300           .0000
    .400            -.2850          -.4480
    .550     .0000          -.3910  -.4800
    .600                                             -.5670
    .700                            -.3640
    .725                    -.1440
    .750     .0000                           .0000
    .800            -.0980
    .850                            -.1410
    .900                    -.0170                   -.3710
    .950     .0000   .0120           .0040
MACH  ( 1) =    1.202    BETA  ( 5) =     6.080

 SECTION ( 1)ORBITER WING                     DEPENDENT VARIABLE CP

ETA          .2990   .4270   .5340   .6730   .7800   .8870

  X/C
    .050     .0000          -.0410  -.0170            .0040
    .250                    -.3920           .0000
    .400            -.3360          -.5310
    .550     .0000          -.4310  -.5540
    .600                                             -.5800
```

```
                                    CAL T14-053 IA36 01 T1 S1  UPPER WING  POWER ON             (UUF114)
MACH  ( 1) =    1.202    BETA  ( 5) =    6.080
 SECTION ( 1)ORBITER WING                     DEPENDENT VARIABLE CP
ETA          .2990   .4270   .5340   .6730   .7800   .8870

  X/C
    .700                             -.5120
    .725                     -.1810
    .750     .0000                           .0000
    .800             -.0900
    .850                             -.1300
    .900                      .0000                  -.5030
    .950     .0000   .0530           -.0810
```

```
                                   CAL T14-053 IA36 U1 T1 S1  UPPER WING  POWER ON               (UUF115)   ( 09 OCT 73  )

                  REFERENCE DATA                                                                   PARAMETRIC DATA

SREF  =  2690.0000 SQ.FT.   XMRP  =   953.0000 IN.                                   BETA   =       .000   OPR    =     28.310
LREF  =  1328.0000 IN.      YMRP  =      .0000 IN.                                   SRMPR  =      2.020   GP1    =    -11.000
BREF  =  1328.0000 IN.      ZMRP  =   400.0000 IN.                                   GP2    =     -8.000   GY2    =     -3.500
SCALE =       .0190 SCALE                                                            GP3    =     -6.000   GY3    =      3.500
                                                                                     GP4    =     -7.000   GP5    =     -7.000

MACH  ( 1) =      .902    ALPHA ( 1) =    -8.060

 SECTION ( 1)ORBITER WING                          DEPENDENT VARIABLE CP

ETA          .2990    .4270    .5340    .6730    .7800    .8870

  X/C
    .050     .0000             .2790    .2780             .1740
    .250                      -.1080             .0000
    .400             -.1300            -.3350
    .550     .0000            -.3200   -.4230
    .600                                                 -.5970
    .700                               -.3150
    .725                      -.1960
    .750     .0000                               .0000
    .800             -.0220
    .850                                .0900
    .900                       .0850                      .1130
    .950     .0000    .0440             .1230

MACH  ( 1) =      .904    ALPHA ( 2) =    -3.970

 SECTION ( 1)ORBITER WING                          DEPENDENT VARIABLE CP

ETA          .2990    .4270    .5340    .6730    .7800    .8870

  X/C
    .050     .0000             .0850    .0840            -.0230
    .250                      -.2860             .0000
    .400             -.2230            -.4350
    .550     .0000            -.3870   -.5150
    .600                                                 -.6430
    .700                               -.4190
    .725                      -.4160
    .750     .0000                               .0000
    .800             -.0530
    .850                                .0430
    .900                       .0810                      .0500
    .950     .0000    .0510             .1190
```

```
                                           CAL T14-053 IA36 01 T1 S1  UPPER WING  POWER ON                 (UUF115)
MACH  ( 1) =      .902   ALPHA ( 3) =      .070

 SECTION ( 1)ORBITER WING                          DEPENDENT VARIABLE CP

ETA            .2990   .4270   .5340   .6730   .7800   .8870

  X/C
    .050       .0000          -.2230  -.2010          -.3530
    .250                      -.4610           .0000
    .400              -.3430          -.5710
    .550       .0000          -.4600  -.5760
    .600                                              -.6040
    .700                              -.3250
    .725                      -.4080
    .750       .0000                           .0000
    .800              -.0880
    .850                              -.0200
    .900                       .0660                  -.0810
    .950       .0000   .0510           .0890
MACH  ( 1) =      .903   ALPHA ( 4) =     3.860

 SECTION ( 1)ORBITER WING                          DEPENDENT VARIABLE CP

ETA            .2990   .4270   .5340   .6730   .7800   .8870

  X/C
    .050       .0000          -.4660  -.5540          -.6110
    .250                      -.6400           .0000
    .400              -.4370          -.8500
    .550       .0000          -.5320  -.6400
    .600                                              -.5830
    .700                              -.2020
    .725                      -.1240
    .750       .0000                           .0000
    .800              -.0490
    .850                              -.0330
    .900                       .0540                  -.3630
    .950       .0000   .0790           .0760
MACH  ( 1) =      .900   ALPHA ( 5) =     5.990

 SECTION ( 1)ORBITER WING                          DEPENDENT VARIABLE CP

ETA            .2990   .4270   .5340   .6730   .7800   .8870

  X/C
    .050       .0000          -.5860  -.5940          -.7530
    .250                      -.7710           .0000
    .400              -.5330          -.9900
    .550       .0000          -.5010  -.5450
    .600                                              -.5980
```

```
DATE 05 NOV 75            TABULATED DATA FOR CAL T14-053 (IA36)

                                   CAL T14-053 IA36 01 T1 S1  UPPER WING  POWER ON              (UUF115)

MACH  ( 1) =     .900   ALPHA ( 5) =    5.990

 SECTION ( 1)ORBITER WING                       DEPENDENT VARIABLE CP

ETA          .2990   .4270   .5340   .6730   .7800   .8870

  X/C
    .700                             -.3310
    .725                     -.1890
    .750     .0000                           .0000
    .800             -.0550
    .850                             -.1800
    .900                     .0360                   -.5480
    .950     .0000   .0860           -.0380
```

```
DATE 05 NOV 75          TABULATED DATA FOR CAL T14-053 (IA36)                                                              PAGE  798

                                  CAL T14-053 IA36 01 T1 S1  UPPER WING  POWER ON                 (UUF116)    ( 09 OCT 73  )

               REFERENCE DATA                                                                       PARAMETRIC DATA

SREF  =  2690.0000 SQ.FT.   XMRP  =    953.0000 IN.                                   ALPHA   =      .000   OPR    =    28.310
LREF  =  1328.0000 IN.      YMRP  =       .0000 IN.                                   SRMPR   =     2.020   GP1    =   -11.000
BREF  =  1328.0000 IN.      ZMRP  =    400.0000 IN.                                   GP2     =    -8.000   GY2    =    -3.500
SCALF =      .0190 SCALE                                                              GP3     =    -8.000   GY3    =     3.500
                                                                                      GP4     =    -7.000   GP5    =    -7.000

MACH  ( 1) =      .901    BETA  ( 1) =    -6.080

 SECTION ( 1)ORBITER WING                    DEPENDENT VARIABLE CP

ETA          .2990   .4270   .5340   .6730   .7800   .8870

  X/C
    .050     .0000          -.0530  -.0710          -.2250
    .250                    -.3270           .0000
    .400            -.2850          -.5080
    .550     .0000          -.4710  -.5790
    .600                                            -.7140
    .700                            -.6810
    .725                    -.6280
    .750     .0000                           .0000
    .800            -.3410
    .850                            -.1020
    .900                    -.0340                  -.1240
    .950     .0000  -.0180           .0130
MACH  ( 1) =      .901    BETA  ( 2) =    -3.050

 SECTION ( 1)ORBITER WING                    DEPENDENT VARIABLE CP

ETA          .2990   .4270   .5340   .6730   .7800   .8870

  X/C
    .050     .0000          -.1580  -.1560          -.3100
    .250                    -.3990           .0000
    .400            -.3280          -.5420
    .550     .0000          -.4800  -.5890
    .600                                            -.7450
    .700                            -.6310
    .725                    -.5980
    .750     .0000                           .0000
    .800            -.2480
    .850                            -.0920
    .900                    -.0060                  -.1320
    .950     .0000   .0050           .0270
```

```
                                  CAL T14-053 IA36 01 T1 S1  UPPER WING  POWER ON                (UUF116)
MACH  ( 1) =     .899    BETA  ( 3) =     .000
 SECTION ( 1)ORBITER WING                   DEPENDENT VARIABLE CP
ETA          .2990   .4270   .5340   .6730   .7800   .8870
  X/C
    .050    .0000           -.2070  -.2080          -.3600
    .250                    -.4650           .0000
    .400            -.3490          -.5890
    .550    .0000           -.4630  -.5860
    .600                                            -.5350
    .700                            -.2950
    .725                    -.4030
    .750    .0000                            .0000
    .800            -.0710
    .850                            -.0100
    .900                     .0640                  -.0690
    .950    .0000    .0540           .0940
MACH  ( 1) =     .899    BETA  ( 4) =    3.060
 SECTION ( 1)ORBITER WING                   DEPENDENT VARIABLE CP
ETA          .2990   .4270   .5340   .6730   .7800   .8870
  X/C
    .050    .0000           -.2890  -.2920          -.3860
    .250                    -.5440           .0000
    .400            -.3640          -.6540
    .550    .0000           -.4410  -.5860
    .600                                            -.4080
    .700                            -.1340
    .725                    -.0980
    .750    .0000                            .0000
    .800             .0210
    .850                             .0670
    .900                     .1050                  -.0660
    .950    .0000    .0960           .1490
MACH  ( 1) =     .902    BETA  ( 5) =    6.090
 SECTION ( 1)ORBITER WING                   DEPENDENT VARIABLE CP
ETA          .2990   .4270   .5340   .6730   .7800   .8870
  X/C
    .050    .0000           -.3390  -.3580          -.3960
    .250                    -.5630           .0000
    .400            -.3720          -.8240
    .550    .0000           -.3790  -.5000
    .600                                            -.4610
```

```
                                    CAL T14-053 IA36 01 T1 S1  UPPER WING  POWER ON              (UUF116)

MACH  ( 1) =     .902    BETA  ( 5) =    6.090

 SECTION ( 1)ORBITER WING                     DEPENDENT VARIABLE CP

ETA          .2990   .4270   .5340   .6730   .7800   .8870

  X/C
    .700                            -.0640
    .725                    -.0150
    .750     .0000                           .0000
    .800             .0690
    .850                             .1130
    .900                     .1390                  -.1010
    .950     .0000   .1290           .1480
```

```
DATE 05 NOV 75            TABULATED DATA FOR CAL T14-053 (IA36)                                                       PAGE  801

                                      CAL T14-053 IA36 01 T1 S1  UPPER WING  POWER OFF              (UUF117)   ( 09 OCT 73  )

                REFERENCE DATA                                                                          PARAMETRIC DATA

SREF  =  2690.0000 SQ.FT.   XMRP  =   953.0000 IN.                             BETA    =      .000   GP1     =      .000
LREF  =  1328.0000 IN.      YMRP  =      .0000 IN.                             GP2     =      .000   GY2     =    -3.500
BREF  =  1328.0000 IN.      ZMRP  =   400.0000 IN.                             GP3     =      .000   GY3     =     3.500
SCALE =      .0190 SCALE                                                       GP4     =      .000   GP5     =      .000

MACH   ( 1) =     1.206    ALPHA ( 1) =    -8.090

 SECTION ( 1)ORBITER WING                    DEPENDENT VARIABLE CP

ETA          .2990    .4270    .5340    .6730    .7800    .8870

  X/C
    .050     .0000             .3030    .3460             .3210
    .250                     -.0680              .0000
    .400              -.0320           -.1460
    .550     .0000             .0040   -.0210
    .600                                                -.1870
    .700                               -.1380
    .725                     -.1020
    .750     .0000                                .0000
    .800              -.0800
    .850                               -.1130
    .900                       .0080                    -.0190
    .950     .0000     .0750            .0630

MACH   ( 1) =     1.205    ALPHA ( 2) =    -6.110

 SECTION ( 1)ORBITER WING                    DEPENDENT VARIABLE CP

ETA          .2990    .4270    .5340    .6730    .7800    .8870

  X/C
    .050     .0000             .2230    .2780             .2440
    .250                     -.1380              .0000
    .400              -.1060           -.2510
    .550     .0000           -.0270   -.0530
    .600                                                -.3620
    .700                               -.1580
    .725                     -.1210
    .750     .0000                                .0000
    .800              -.1050
    .850                               -.1240
    .900                     -.0190                       .0300
    .950     .0000     .0300            .0420
```

```
                         CAL T14-053 IA36 01 T1 S1  UPPER WING  POWER OFF            (UUF117)

MACH  ( 1) =    1.208   ALPHA ( 3) =    -4.070

 SECTION ( 1)ORBITER WING                 DEPENDENT VARIABLE CP

ETA          .2990   .4270   .5340   .6730   .7800   .8870

  X/C
   .050      .0000           .1480   .1910           .1640
   .250                     -.1810           .0000
   .400             -.1840          -.3110
   .550      .0000          -.0790  -.2210
   .600                                             -.4410
   .700                             -.1660
   .725                     -.1340
   .750      .0000                           .0000
   .800             -.1200
   .850                             -.1320
   .900                     -.0420                  -.0250
   .950      .0000  -.0050           .0390
MACH  ( 1) =    1.206   ALPHA ( 4) =    -2.010

 SECTION ( 1)ORBITER WING                 DEPENDENT VARIABLE CP

ETA          .2990   .4270   .5340   .6730   .7800   .8870

  X/C
   .050      .0000           .0860   .1070           .0740
   .250                     -.2380           .0000
   .400             -.2370          -.3790
   .550      .0000          -.1610  -.3930
   .600                                             -.4840
   .700                             -.2100
   .725                     -.1450
   .750      .0000                           .0000
   .800             -.1410
   .850                             -.1260
   .900                     -.0690                  -.1420
   .950      .0000  -.0320           .0230
MACH  ( 1) =    1.207   ALPHA ( 5) =     -.030

 SECTION ( 1)ORBITER WING                 DEPENDENT VARIABLE CP

ETA          .2990   .4270   .5340   .6730   .7800   .8870

  X/C
   .050      .0000           .0080   .0090          -.0120
   .250                     -.2850           .0000
   .400             -.2870          -.4300
   .550      .0000          -.3360  -.4420
   .600                                             -.5120
```

```
                                      CAL T14-053 IA36 01 T1 S1  UPPER WING  POWER OFF          (UUF117)

MACH  ( 1) =    1.207    ALPHA ( 5) =    -.030

 SECTION ( 1)ORBITER WING                         DEPENDENT VARIABLE CP

ETA           .2990    .4270    .5340    .6730    .7800    .8870

  X/C
    .700                                 -.2760
    .725                        -.1510
    .750      .0000                               .0000
    .800               -.1570
    .850                                 -.1400
    .900                        -.0800                     -.2610
    .950      .0000    -.0460            -.0070

MACH  ( 1) =    1.205    ALPHA ( 6) =    2.030

 SECTION ( 1)ORBITER WING                         DEPENDENT VARIABLE CP

ETA           .2990    .4270    .5340    .6730    .7800    .8870

  X/C
    .050      .0000             -.0960   -.1000            -.1090
    .250                        -.3530            .0000
    .400               -.3150            -.4770
    .550      .0000             -.4150   -.4850
    .600                                                   -.5960
    .700                                 -.4030
    .725                        -.1810
    .750      .0000                               .0000
    .800               -.1710
    .850                                 -.1910
    .900                        -.1000                     -.4400
    .950      .0000    -.0560            -.0530

MACH  ( 1) =    1.205    ALPHA ( 7) =    4.000

 SECTION ( 1)ORBITER WING                         DEPENDENT VARIABLE CP

ETA           .2990    .4270    .5340    .6730    .7800    .8870

  X/C
    .050      .0000             -.1770   -.1770            -.1920
    .250                        -.4000            .0000
    .400               -.3390            -.5510
    .550      .0000             -.4350   -.5390
    .600                                                   -.6230
    .700                                 -.4970
    .725                        -.2290
    .750      .0000                               .0000
    .800               -.1970
    .850                                 -.2490
```

```
                                 CAL T14-053 IA36 O1 T1 S1  UPPER WING  POWER OFF          (UUF117)
MACH  ( 1) =    1.205    ALPHA ( 7) =    4.000

 SECTION ( 1)ORBITER WING                    DEPENDENT VARIABLE CP

E.A            .2990   .4270   .5340   .6730   .7800   .8870

  X/C
    .900                      -.1160                   -.5650
    .950       .0000  -.0660          -.1120
MACH  ( 1) =    1.205    ALPHA ( 8) =    5.960

 SECTION ( 1)ORBITER WING                    DEPENDENT VARIABLE CP

ETA            .2990   .4270   .5340   .6730   .7800   .8870

  X/C
    .050       .0000          -.2510  -.2650           -.2770
    .250                      -.4900           .0000
    .400              -.3500          -.6070
    .550       .0000          -.4760  -.5960
    .600                                               -.6740
    .700                              -.5530
    .725                      -.2770
    .750       .0000                           .0000
    .800              -.2260
    .850                              -.2840
    .900                      -.1410                   -.6260
    .950       .0000  -.0820          -.1790
MACH  ( 1) =    1.205    ALPHA ( 9) =    7.990

 SECTION ( 1)ORBITER WING                    DEPENDENT VARIABLE CP

ETA            .2990   .4270   .5340   .6730   .7800   .8870

  X/C
    .050       .0000          -.3240  -.3480           -.3780
    .250                      -.5530           .0000
    .400              -.3740          -.6610
    .550       .0000          -.5030  -.6850
    .600                                               -.7180
    .700                              -.6260
    .725                      -.3160
    .750       .0000                           .0000
    .800              -.2570
    .850                              -.3190
    .900                      -.1690                   -.5760
    .950       .0000  -.0980          -.2340
```

```
DATE 05 NOV 75           TABULATED DATA FOR CAL T14-053 (IA36)                                                   PAGE  905

                                     CAL T14-053 IA36 01 T1 S1  UPPER WING  POWER OFF            (UUF118)   ( 09 OCT 73  )

              REFERENCE DATA                                                                         PARAMETRIC DATA

SREF  =  2690.0000 SQ.FT.   XMRP  =   953.0000 IN.                                   ALPHA  =      .000   GP1    =      .000
LREF  =  1328.0000 IN.      YMRP  =      .0000 IN.                                   GP2    =      .000   GY2    =    -3.500
BREF  =  1328.0000 IN.      ZMRP  =   400.0000 IN.                                   GP3    =      .000   GY3    =     3.500
SCALE =      .0190 SCALE                                                             GP4    =      .000   GP5    =      .000

MACH  ( 1) =    1.209    BETA  ( 1) =   -8.080

 SECTION ( 1)ORBITER WING                  DEPENDENT VARIABLE CP

ETA          .2990   .4270   .5340   .6730   .7800   .8870

  X/C
    .050    .0000           -.0100   .0580            .0110
    .250                    -.1950           .0000
    .400            -.2470          -.3530
    .550    .0000           -.1350  -.1660
    .600                                             -.4770
    .700                            -.2120
    .725                    -.1910
    .750    .0000                            .0000
    .800            -.2230
    .850                            -.2040
    .900                    -.1530                   -.0530
    .950    .0000   -.0890          -.0760

MACH  ( 1) =    1.205    BETA  ( 2) =   -6.060

 SECTION ( 1)ORBITER WING                  DEPENDENT VARIABLE CP

ETA          .2990   .4270   .5340   .6730   .7800   .8870

  X/C
    .050    .0000           -.0230   .0420           -.0100
    .250                    -.2480           .0000
    .400            -.2690          -.3840
    .550    .0000           -.1710  -.3290
    .600                                             -.5020
    .700                            -.2200
    .725                    -.1980
    .750    .0000                            .0000
    .800            -.2180
    .850                            -.1920
    .900                    -.1520                   -.1100
    .950    .0000   - 0850          -.0580
```

```
                         CAL T14-053 IA36 01 T1 S1  UPPER WING  POWER OFF          (UUF118)

MACH  ( 1) =    1.206    BETA  ( 3) =   -4.030

  SECTION ( 1)ORBITER WING                  DEPENDENT VARIABLE CP

ETA          .2990   .4270   .5340   .6730   .7800   .8870

  X/C
   .050      .0000          -.0220   .0280          -.0130
   .250                     -.2750           .0000
   .400             -.2730          -.4090
   .550      .0000          -.2090  -.4160
   .600                                             -.5110
   .700                             -.2310
   .725                     -.1920
   .750      .0000                           .0000
   .800             -.2060
   .850                             -.1800
   .900                     -.1330                  -.1710
   .950      .0000  -.0790          -.0420

MACH  ( 1) =    1.206    BETA  ( 4) =   -3.040

  SECTION ( 1)ORBITER WING                  DEPENDENT VARIABLE CP

ETA          .2990   .4270   .5340   .6730   .7800   .8870

  X/C
   .050      .0000          -.0190   .0100          -.0070
   .250                     -.2740           .0000
   .400             -.2770          -.4140
   .550      .0000          -.2350  -.4300
   .600                                             -.5120
   .700                             -.2400
   .725                     -.1830
   .750      .0000                           .0000
   .800             -.1990
   .850                             -.1710
   .900                     -.1240                  -.1960
   .950      .0000  -.0760          -.0340

MACH  ( 1) =    1.206    BETA  ( 5) =   -2.020

  SECTION ( 1)ORBITER WING                  DEPENDENT VARIABLE CP

ETA          .2990   .4270   .5340   .6730   .7800   .8870

  X/C
   .050      .0000          -.0230   .0060          -.0070
   .250                     -.2830           .0000
   .400             -.2910          -.4190
   .550      .0000          -.2840  -.4450
   .600                                             -.5140
```

```
                                  CAL T14-053 IA36 01 T1 S1  UPPER WING  POWER OFF            (UUF11U)

MACH  ( 1) =    1.206    BETA  ( 5) =   -2.020

 SECTION ( 1)ORBITER WING                    DEPENDENT VARIABLE CP

ETA          .2990   .4270   .5340   .6730   .7800   .8870

  X/C
    .700                             -.2520
    .725                     -.1760
    .750     .0000                           .0000
    .800             -.1850
    .850                             -.1630
    .900                     -.1090                  -.2210
    .950     .0000   -.0720          -.0290

MACH  ( 1) =    1.205    BETA  ( 6) =     .000

 SECTION ( 1)ORBITER WING                    DEPENDENT VARIABLE CP

ETA          .2990   .4270   .5340   .6730   .7800   .8870

  X/C
    .050     .0000            .0120   .0020          -.0160
    .250                     -.2850           .0000
    .400             -.2870          -.4260
    .550     .0000           -.3250  -.4410
    .600                                             -.5130
    .700                             -.2750
    .725                     -.1560
    .750     .0000                            .0000
    .800             -.1600
    .850                             -.1400
    .900                     -.0780                  -.2560
    .950     .0000   -.0450          -.0010

MACH  ( 1) =    1.205    BETA  ( 7) =    2.020

 SECTION ( 1)ORBITER WING                    DEPENDENT VARIABLE CP

ETA          .2990   .4270   .5340   .6730   .7800   .8870

  X/C
    .050     .0000            .0110   .0040          -.0110
    .250                     -.3180           .0000
    .400             -.2920          -.4480
    .550     .0000           -.3730  -.4720
    .600                                             -.5440
    .700                             -.3250
    .725                     -.1430
    .750     .0000                            .0000
    .800             -.1300
    .850                             -.1440
```

```
                                   CAL T14-053 IA36 01 T1 S1  UPPER WING  POWER OFF              (UUF118)
MACH  ( 1) =     1.205    BETA  ( 7) =     2.020

 SECTION ( 1)ORBITER WING                    DEPENDENT VARIABLE CP

ETA            .2990     .4270     .5340     .6730     .7800     .8870

  X/C
     .900                         -.0490                        -.3490
     .950      .0000    -.0200              -.0030
MACH  ( 1) =     1.207    BETA  ( 8) =     3.040

 SECTION ( 1)ORBITER WING                    DEPENDENT VARIABLE CP

ETA            .2990     .4270     .5340     .6730     .7800     .8870

  X/C
     .050      .0000              -.0070    -.0080              -.0100
     .250                         -.3380               .0000
     .400               -.2990              -.4580
     .550      .0000              -.3920    -.4790
     .600                                                       -.5540
     .700                                   -.3720
     .725                         -.1400
     .750      .0000                                   .0000
     .800               -.1140
     .850                                   -.1560
     .900                         -.0330                        -.3960
     .950      .0000    -.0120              -.0180
MACH  ( 1) =     1.208    BETA  ( 9) =     4.030

 SECTION ( 1)ORBITER WING                    DEPENDENT VARIABLE CP

ETA            .2990     .4270     .5340     .6730     .7800     .8870

  X/C
     .050      .0000              -.0350    -.0140              -.0080
     .250                         -.3610               .0000
     .400               -.3100              -.4680
     .550      .0000              -.4050    -.4880
     .600                                                       -.5600
     .700                                   -.4070
     .725                         -.1460
     .750      .0000                                   .0000
     .800               -.1060
     .850                                   -.1720
     .900                         -.0250                        -.4310
     .950      .0000     .0010              -.0370
```

```
                                   CAL T14-053 IA36 01 T1 S1  UPPER WING  POWER OFF              (UUF118)

MACH  ( 1) =     1.206    BETA  (10) =     6.060

 SECTION ( 1)ORBITER WING                       DEPENDENT VARIABLE CP

ETA           .2990    .4270    .5340    .6730    .7800    .8870

  X/C
    .050      .0000             -.0540   -.0300             -.0030
    .250                        -.3950             .0000
    .400               -.3380            -.5260
    .550      .0000             -.4270   -.5350
    .600                                                    -.5660
    .700                                 -.5080
    .725                        -.1860
    .750      .0000                                .0000
    .800               -.0990
    .850                                 -.1970
    .900                        -.0110                      -.4930
    .950      .0000     .0310            -.0960

MACH  ( 1) =     1.207    BETA  (11) =     8.090

 SECTION ( 1)ORBITER WING                       DEPENDENT VARIABLE CP

ETA           .2990    .4270    .5340    .6730    .7800    .8870

  X/C
    .050      .0000             -.0700   -.0300              .0090
    .250                        -.4140             .0000
    .400               -.3510            -.5320
    .550      .0000             -.4500   -.5570
    .600                                                    -.5590
    .700                                 -.5440
    .725                        -.2140
    .750      .0000                                .0000
    .800               -.0880
    .850                                 -.2310
    .900                        -.0110                      -.4990
    .950      .0000     .0540            -.1580
```

```
                                   CAL T14-053 IA36 01 T1 S1  UPPER WING  POWER OFF              (UUF119)   ( 09 OCT 73  )

                 REFERENCE DATA                                                                       PARAMETRIC DATA

SREF  =  2690.0000 SQ.FT.   XMRP  =   953.0000 IN.                                    BETA   =     .000   GP1    =     .000
LREF  =  1328.0000 IN.      YMRP  =      .0000 IN.                                    GP2    =     .000   GY2    =   -3.500
BREF  =  1328.0000 IN.      ZMRP  =   400.0000 IN.                                    GP3    =     .000   GY3    =    3.500
SCALE =      .0190 SCALE                                                              GP4    =     .000   GP5    =     .000

MACH  ( 1) =      .903    ALPHA ( 1) =   -6.140

 SECTION ( 1)ORBITER WING                     DEPENDENT VARIABLE CP

ETA          .2990    .4270    .5340    .6730    .7800    .8870

  X/C
    .050     .0000             .1540    .1500             .0660
    .250                     -.2260             .0000
    .400             -.2010            -.4230
    .550     .0000           -.3930    -.4880
    .600                                                -.6370
    .700                               -.3990
    .725                     -.3140
    .750     .0000                               .0000
    .800             -.0560
    .850                                .0490
    .900                       .0690                      .0570
    .950     .0000    .0220             .1010
MACH  ( 1) =      .903    ALPHA ( 2) =   -4.040

 SECTION ( 1)ORBITER WING                     DEPENDENT VARIABLE CP

ETA          .2990    .4270    .5340    .6730    .7800    .8870

  X/C
    .050     .0000             .0500    .0540            -.0500
    .250                     -.3150             .0000
    .400             -.2500            -.4620
    .550     .0000           -.4250    -.5350
    .600                                                -.6600
    .700                               -.4230
    .725                     -.4400
    .750     .0000                               .0000
    .800             -.0740
    .850                                .0120
    .900                       .0560                      .0060
    .950     .0000    .0230             .0850
```

```
                                CAL T14-053 IA36 01 T1 S1  UPPER WING  POWER OFF              (UUF119)

MACH  ( 1) =     .901    ALPHA ( 3) =   -2.060

 SECTION ( 1)ORBITER WING                  DEPENDENT VARIABLE CP

ETA          .2990   .4270   .5340   .6730   .7800   .8870

  X/C
    .050    .0000           -.0840  -.0590          -.1910
    .250                    -.3830           .0000
    .400            -.3010          -.5170
    .550    .0000           -.4570  -.5770
    .600                                            -.7220
    .700                            -.4230
    .725                    -.4150
    .750    .0000                            .0000
    .800            -.0950
    .850                            -.0270
    .900                     .0500                  -.0400
    .950    .0000    .0190           .0550
MACH  ( 1) =     .904    ALPHA ( 4) =     .010

 SECTION ( 1)ORBITER WING                  DEPENDENT VARIABLE CP

ETA          .2990   .4270   .5340   .6730   .7800   .8870

  X/C
    .050    .0000           -.2300  -.2160          -.3650
    .250                    -.4800           .0000
    .400            -.3730          -.5950
    .550    .0000           -.4840  -.5990
    .600                                            -.6640
    .700                            -.3570
    .725                    -.4470
    .750    .0000                            .0000
    .800            -.1030
    .850                            -.0500
    .900                     .0380                  -.1130
    .950    .0000    .0260           .0500
MACH  ( 1) =     .902    ALPHA ( 5) =    2.010

 SECTION ( 1)ORBITER WING                  DEPENDENT VARIABLE CP

ETA          .2990   .4270   .5340   .6730   .7800   .8870

  X/C
    .050    .0000           -.3650  -.3820          -.4970
    .250                    -.5710           .0000
    .400            -.4000          -.7290
    .550    .0000           -.5230  -.6310
    .600                                            -.5100
```

```
                                        CAL T14-053 IA36 01 T1 S1  UPPER WING  POWER OFF                (UUF119)

MACH  ( 1) =     .902    ALPHA ( 5) =    2.010

 SECTION ( 1)ORBITER WING                      DEPENDENT VARIABLE CP

ETA          .2990   .4270   .5340   .6730   .7800   .8870

  X/C
    .700                             -.2520
    .725                     -.2590
    .750     .0000                           .0000
    .800            -.0900
    .850                             -.0520
    .900                      .0340                  -.3010
    .950     .0000   .0380            .0500
MACH  ( 1) =     .903    ALPHA ( 6) =    4.000

 SECTION ( 1)ORBITER WING                      DEPENDENT VARIABLE CP

ETA          .2990   .4270   .5340   .6730   .7800   .8870

  X/C
    .050     .0000           -.4720  -.5680          -.6280
    .250                     -.6430           .0000
    .400            -.4570           -.8580
    .550     .0000           -.5390  -.6700
    .500                                             -.6150
    .700                             -.2470
    .725                     -.1760
    .750     .0000                            .0000
    .800            -.0850
    .850                             -.0770
    .900                      .0250                  -.4550
    .950     .0000   .0600            .0180
MACH  ( 1) =     .905    ALPHA ( 7) =    6.020

 SECTION ( 1)ORBITER WING                      DEPENDENT VARIABLE CP

ETA          .2990   .4270   .5340   .6730   .7800   .8870

  X/C
    .050     .0000           -.5910  -.6760          -.7410
    .250                     -.7500           .0000
    .400            -.5300           -.9600
    .550     .0000           -.5460  -.5280
    .600                                             -.6010
    .700                             -.3230
    .725                     -.1870
    .750     .0000                            .0000
    .800            -.0530
    .850                             -.1580
```

```
DATE 05 NOV 75            TABULATED DATA FOR CAL T14-053 (IA36)                                                          PAGE  813
                                       CAL T14-053 IA36 O1 T1 S1  UPPER WING  POWER OFF             (UUF119)

MACH  ( 1) =     .905    ALPHA ( 7) =    6.020

 SECTION ( 1)ORBITER WING                  DEPENDENT VARIABLE CP

ETA         .2990   .4270   .5340   .6730   .7800   .8870

  X/C
    .900                    .0350                  -.5300
    .950    .0000   .0740          -.0400
MACH  ( 1) =     .902    ALPHA ( 8) =    7.990

 SECTION ( 1)ORBITER WING                  DEPENDENT VARIABLE CP

ETA         .2990   .4270   .5340   .6730   .7800   .8870

  X/C
    .050    .0000          -.7120  -.8230          -.8880
    .250                   -.8510           .0000
    .400           -.6320          -.7080
    .550    .0000          -.3680  -.5820
    .600                                           -.5950
    .700                           -.4730
    .725                   -.3080
    .750    .0000                           .0000
    .800           -.1030
    .850                           -.3640
    .900                   -.0310                  -.5440
    .950    .0000   .0280          -.2400
```

```
                              CAL T14-053 IA36 01 T1 S1  UPPER WING  POWER OFF             (UUF120)   ( 09 OCT 73  )

              REFERENCE DATA                                                                PARAMETRIC DATA

SREF  =  2690.0000 SQ.FT.   XMRP  =   953.0000 IN.                          ALPHA   =    .000   GP1    =     .000
LREF  =  1328.0000 IN.      YMRP  =      .0000 IN.                          GP2     =    .000   GY2    =   -3.500
BREF  =  1328.0000 IN.      ZMRP  =   400.0000 IN.                          GP3     =    .000   GY3    =    3.500
SCALE =      .0190 SCALE                                                    GP4     =    .000   GP5    =     .000

MACH  ( 1) =      .904    BETA  ( 1) =   -8.090

 SECTION ( 1)ORBITER WING                    DEPENDENT VARIABLE CP

ETA         .2990   .4270   .5340   .6730   .7800   .8870

 X/C
   .050     .0000           .0090  -.0110          -.1550
   .250                    -.2940           .0000
   .400            -.2780          -.4950
   .550     .0000          -.4860  -.5660
   .600                                            -.7080
   .700                            -.6910
   .725                    -.6360
   .750     .0000                           .0000
   .800            -.3650
   .850                            -.1120
   .900                    -.0480                  -.1200
   .950     .0000  -.0550          -.0010
MACH  ( 1) =      .903    BETA  ( 2) =   -6.070

 SECTION ( 1)ORBITER WING                    DEPENDENT VARIABLE CP

ETA         .2990   .4270   .5340   .6730   .7800   .8870

 X/C
   .050     .0000          -.0870  -.0950          -.2380
   .250                    -.3460           .0000
   .400            -.3110          -.5290
   .550     .0000          -.5000  -.5950
   .600                                            -.7290
   .700                            -.6830
   .725                    -.6320
   .750     .0000                           .0000
   .800            -.2960
   .850                            -.1220
   .900                    -.0390                  -.1410
   .950     .0000  -.0350          -.0130
```

```
                                          CAL T14-053 IA36 O1 T1 S1  UPPER WING  POWER OFF              (UUF120)

MACH  ( 1) =      .901    BETA  ( 3) =   -4.040

 SECTION ( 1)ORBITER WING                        DEPENDENT VARIABLE CP

ETA          .2990   .4270   .5340   .6730   .7800   .8870

  X/C
    .050    .0000           -.1510  -.1350          -.2890
    .250                    -.3790           .0000
    .400            -.3340          -.5370
    .550    .0000           -.5040  -.6060
    .600                                            -.7370
    .700                            -.6230
    .725                    -.6020
    .750    .0000                            .0000
    .800            -.2340
    .850                            -.1080
    .900                    -.0190                  -.1380
    .950    .0000   -.0140           .0030
MACH  ( 1) =      .903    BETA  ( 4) =   -3.040

 SECTION ( 1)ORBITER WING                        DEPENDENT VARIABLE CP

ETA          .2990   .4270   .5340   .6730   .7800   .8870

  X/C
    .050    .0000           -.1770  -.1660          -.3110
    .250                    -.3980           .0000
    .400            -.3520          -.5560
    .550    .0000           -.5040  -.6070
    .600                                            -.7090
    .700                            -.5450
    .725                    -.5860
    .750    .0000                            .0000
    .800            -.1990
    .850                            -.0960
    .900                    -.0060                  -.1360
    .950    .0000   -.0030           .0120
MACH  ( 1) =      .902    BETA  ( 5) =   -2.030

 SECTION ( 1)ORBITER WING                        DEPENDENT VARIABLE CP

ETA          .2990   .4270   .5340   .6730   .7800   .8870

  X/C
    .050    .0000           -.2070  -.2100          -.3310
    .250                    -.4460           .0000
    .400            -.3650          -.5810
    .550    .0000           -.5090  -.6060
    .600                                            -.6990
```

```
                              CAL T14-053 IA36 O1 T1 S1  UPPER WING  POWER OFF          (UUF120)

MACH  ( 1) =     .902   BETA  ( 5) =   -2.030

 SECTION ( 1)ORBITER WING                   DEPENDENT VARIABLE CP

ETA          .2990   .4270   .5340   .6730   .7800   .8870

  X/C
    .700                            -.5150
    .725                    -.5570
    .750     .0000                            .0000
    .800            -.1820
    .850                            -.0910
    .900                     .0050                   -.1300
    .950     .0000  -.0040           .0160

MACH  ( 1) =     .901   BETA  ( 6) =    2.030

 SECTION ( 1)ORBITER WING                   DEPENDENT VARIABLE CP

ETA          .2990   .4270   .5340   .6730   .7800   .8870

  X/C
    .050     .0000          -.2730  -.2690           -.3980
    .250                    -.5180            .0000
    .400            -.3870          -.6320
    .550     .0000          -.4780  -.6060
    .600                                             -.4120
    .700                            -.1910
    .725                    -.1380
    .750     .0000                            .0000
    .800            -.0230
    .850                             .0130
    .900                     .0820                   -.0450
    .950     .0000   .0530           .1030

MACH  ( 1) =     .901   BETA  ( 7) =    3.040

 SECTION ( 1)ORBITER WING                   DEPENDENT VARIABLE CP

ETA          .2990   .4270   .5340   .6730   .7800   .8870

  X/C
    .050     .0000          -.3130  -.2870           -.3950
    .250                    -.5380            .0000
    .400            -.3890          -.6750
    .550     .0000          -.4690  -.6020
    .600                                             -.4200
    .700                            -.1600
    .725                    -.1080
    .750     .0000                            .0000
    .800            -.0060
    .850                             .0360
```

```
                                   CAL T14-053 IA36 O1 T1 S1  UPPER WING  POWER OFF            (UUF120)

MACH  ( 1) =     .901    BETA  ( 7) =     3.040

 SECTION ( 1)ORBITER WING                      DEPENDENT VARIABLE CP

ETA          .2990    .4270    .5340    .6730    .7800    .8870

  X/C
    .900                       .0880                      -.0610
    .950     .0000    .0640             .1170

MACH  ( 1) =     .904    BETA  ( 8) =     4.040

 SECTION ( 1)ORBITER WING                      DEPENDENT VARIABLE CP

ETA          .2990    .4270    .5340    .6730    .7800    .8870

  X/C
    .050     .0000            -.3280   -.3110             -.3960
    .250                      -.5680             .0000
    .400             -.3840            -.7360
    .550     .0000            -.4560   -.5920
    .600                                                  -.4090
    .700                               -.1350
    .725                      -.0680
    .750     .0000                               .0000
    .800              .0110
    .850                                .0540
    .900                       .1040                      -.0710
    .950     .0000    .0770             .1180

MACH  ( 1) =     .902    BETA  ( 9) =     6.070

 SECTION ( 1)ORBITER WING                      DEPENDENT VARIABLE CP

ETA          .2990    .4270    .5340    .6730    .7800    .8870

  X/C
    .050     .0000            -.3680   -.3560             -.4000
    .250                      -.5650             .0000
    .400             -.4040            -.8170
    .550     .0000            -.4120   -.5320
    .600                                                  -.4390
    .700                               -.0970
    .725                      -.0300
    .750     .0000                               .0000
    .800              .0370
    .850                                .0780
    .900                       .1190                      -.0720
    .950     .0000    .0950             .1160
```

```
                                   CAL T14-053 IA36 O1 Ti S1  UPPER WING  POWER OFF          (UUF120)

MACH  ( 1) =      .900    BETA  (10) =     8.100

 SECTION ( 1)ORBITER WING                   DEPENDENT VARIABLE CP

ETA          .2990   .4270   .5340   .6730   .7800   .8870

  X/C
   .050      .0000          -.4020  -.4280          -.4110
   .250                     -.6510           .0000
   .400             -.4010          -.8460
   .550      .0000          -.3320  -.3820
   .600                                             -.4630
   .700                             -.0720
   .725                     -.0100
   .750      .0000                           .0000
   .800              .0540
   .850                              .0960
   .900                      .1260                  -.2010
   .950      .0000   .1060           .1100

MACH  ( 1) =      .904    BETA  (11) =      .000

 SECTION ( 1)ORBITER WING                   DEPENDENT VARIABLE CP

ETA          .2990   .4270   .5340   .5730   .7800   .8870

  X'C
   .050      .9000          -.2420  -.2190          -.3660
   .250                     -.4730           .0000
   .400             -.3680          -.5980
   .550      .0000          -.4840  -.5930
   .600                                             -.6280
   .700                             -.3320
   .725                     -.4010
   .750      .0000                           .0000
   .800             -.0920
   .850                             -.0440
   .900                      .0420                  -.0950
   .950      .0000   .0260           .0580

MACH  ( 1) =      .048    BETA  (12) =      .000

 SECTION ( 1)ORBITER WING                   DEPENDENT VARIABLE CP

ETA          .2990   .4270   .5340   .6730   .7800   .8870

  X/C
   .050      .0000         -2.1930 -1.1350         -1.2240
   .250                    -1.9640           .0000
   .400            -2.0790         -1.1350
   .550      .0000         -2.3080 -1.1350
   .600                                            -1.2240
```

```
                                        CAL T14-053 IA36 01 T1 S1  UPPER WING  POWER OFF               (UUF120)

MACH  ( 1) =     .048    BETA  (12) =      .000

 SECTION ( 1)ORBITER WING                    DEPENDENT VARIABLE CP

ETA          .2990    .4270    .5340    .6730    .7800    .8870

  X/C
   .700                                -1.1350
   .725                       -1.1350
   .750      .0000                                .0000
   .800             -2.0790
   .850                                -1.0230
   .900                       -1.2480                    -1.2240
   .950      .0000  -1.9640            -1.1350
```